ispMACH® 4000V/B/C/Z Family

3.3V/2.5V/1.8V In-System Programmable SuperFAST™ High Density PLDs

May 2009 Data Sheet DS1020

Features

High Performance
- f_{MAX} = 400MHz maximum operating frequency
- t_{PD} = 2.5ns propagation delay
- Up to four global clock pins with programmable clock polarity control
- Up to 80 PTs per output

Ease of Design
- Enhanced macrocells with individual clock, reset, preset and clock enable controls
- Up to four global OE controls
- Individual local OE control per I/O pin
- Excellent First-Time-Fit™ and refit
- Fast path, SpeedLocking™ Path, and wide-PT path
- Wide input gating (36 input logic blocks) for fast counters, state machines and address decoders

Zero Power (ispMACH 4000Z) and Low Power (ispMACH 4000V/B/C)
- Typical static current 10µA (4032Z)
- Typical static current 1.3mA (4000C)
- 1.8V core low dynamic power
- ispMACH 4000Z operational down to 1.6V V_{CC}

Broad Device Offering
- Multiple temperature range support
  - Commercial: 0 to 90°C junction (T_j)
  - Industrial: -40 to 105°C junction (T_j)
  - Extended: -40 to 130°C junction (T_j)
  - For AEC-Q100 compliant devices, refer to LA-ispMACH 4000V/Z Automotive Data Sheet

Easy System Integration
- Superior solution for power sensitive consumer applications
- Operation with 3.3V, 2.5V or 1.8V LVCMOS I/O
- Operation with 3.3V (4000V), 2.5V (4000B) or 1.8V (4000C/Z) supplies
- 5V tolerant I/O for LVCMOS 3.3, LVTTL, and PCI interfaces
- Hot-socketing
- Open-drain capability
- Input pull-up, pull-down or bus-keeper
- Programmable output slew rate
- 3.3V PCI compatible
- IEEE 1149.1 boundary scan testable
- 3.3V/2.5V/1.8V In-System Programmable (ISP™) using IEEE 1532 compliant interface
- I/O pins with fast setup path
- Lead-free package options

Table 1. ispMACH 4000V/B/C Family Selection Guide

	ispMACH 4032V/B/C	ispMACH 4064V/B/C	ispMACH 4128V/B/C	ispMACH 4256V/B/C	ispMACH 4384V/B/C	ispMACH 4512V/B/C
Macrocells	32	64	128	256	384	512
I/O + Dedicated Inputs	30+2/32+4	30+2/32+4/ 64+10	64+10/92+4/ 96+4	64+10/96+14/ 128+4/160+4	128+4/192+4	128+4/208+4
t_{PD} (ns)	2.5	2.5	2.7	3.0	3.5	3.5
t_S (ns)	1.8	1.8	1.8	2.0	2.0	2.0
t_{CO} (ns)	2.2	2.2	2.7	2.7	2.7	2.7
f_{MAX} (MHz)	400	400	333	322	322	322
Supply Voltages (V)	3.3/2.5/1.8V	3.3/2.5/1.8V	3.3/2.5/1.8V	3.3/2.5/1.8V	3.3/2.5/1.8V	3.3/2.5/1.8V
Pins/Package	44 TQFP 48 TQFP	44 TQFP 48 TQFP 100 TQFP	100 TQFP 128 TQFP 144 TQFP[1]	100 TQFP 144 TQFP[1] 176 TQFP 256 ftBGA[2]/ fpBGA[2, 3]	176 TQFP 256 ftBGA/ fpBGA[3]	176 TQFP 256 ftBGA/ fpBGA[3]

1. 3.3V (4000V) only.
2. 128-I/O and 160-I/O configurations.
3. Use 256 ftBGA package for all new designs. Refer to PCN#14A-07 for 256 fpBGA package discontinuance.

© 2009 Lattice Semiconductor Corp. All Lattice trademarks, registered trademarks, patents, and disclaimers are as listed at www.latticesemi.com/legal. All other brand or product names are trademarks or registered trademarks of their respective holders. The specifications and information herein are subject to change without notice.

Downloaded from Elcodis.com electronic components distributor

Table 2. ispMACH 4000Z Family Selection Guide

	ispMACH 4032ZC	ispMACH 4064ZC	ispMACH 4128ZC	ispMACH 4256ZC
Macrocells	32	64	128	256
I/O + Dedicated Inputs	32+4/32+4	32+4/32+12/ 64+10/64+10	64+10/96+4	64+10/96+6/ 128+4
t_{PD} (ns)	3.5	3.7	4.2	4.5
t_S (ns)	2.2	2.5	2.7	2.9
t_{CO} (ns)	3.0	3.2	3.5	3.8
f_{MAX} (MHz)	267	250	220	200
Supply Voltage (V)	1.8	1.8	1.8	1.8
Max. Standby Icc (µA)	20	25	35	55
Pins/Package	48 TQFP 56 csBGA	48 TQFP 56 csBGA 100 TQFP 132 csBGA	100 TQFP 132csBGA	100 TQFP 132 csBGA 176 TQFP

ispMACH 4000 Introduction

The high performance ispMACH 4000 family from Lattice offers a SuperFAST CPLD solution. The family is a blend of Lattice's two most popular architectures: the ispLSI® 2000 and ispMACH 4A. Retaining the best of both families, the ispMACH 4000 architecture focuses on significant innovations to combine the highest performance with low power in a flexible CPLD family.

The ispMACH 4000 combines high speed and low power with the flexibility needed for ease of design. With its robust Global Routing Pool and Output Routing Pool, this family delivers excellent First-Time-Fit, timing predictability, routing, pin-out retention and density migration.

The ispMACH 4000 family offers densities ranging from 32 to 512 macrocells. There are multiple density-I/O combinations in Thin Quad Flat Pack (TQFP), Chip Scale BGA (csBGA) and Fine Pitch Thin BGA (ftBGA) packages ranging from 44 to 256 pins/balls. Table 1 shows the macrocell, package and I/O options, along with other key parameters.

The ispMACH 4000 family has enhanced system integration capabilities. It supports 3.3V (4000V), 2.5V (4000B) and 1.8V (4000C/Z) supply voltages and 3.3V, 2.5V and 1.8V interface voltages. Additionally, inputs can be safely driven up to 5.5V when an I/O bank is configured for 3.3V operation, making this family 5V tolerant. The ispMACH 4000 also offers enhanced I/O features such as slew rate control, PCI compatibility, bus-keeper latches, pull-up resistors, pull-down resistors, open drain outputs and hot socketing. The ispMACH 4000 family members are 3.3V/2.5V/1.8V in-system programmable through the IEEE Standard 1532 interface. IEEE Standard 1149.1 boundary scan testing capability also allows product testing on automated test equipment. The 1532 interface signals TCK, TMS, TDI and TDO are referenced to V_{CC} (logic core).

Overview

The ispMACH 4000 devices consist of multiple 36-input, 16-macrocell Generic Logic Blocks (GLBs) interconnected by a Global Routing Pool (GRP). Output Routing Pools (ORPs) connect the GLBs to the I/O Blocks (IOBs), which contain multiple I/O cells. This architecture is shown in Figure 1.

Downloaded from Elcodis.com electronic components distributor

Figure 1. Functional Block Diagram

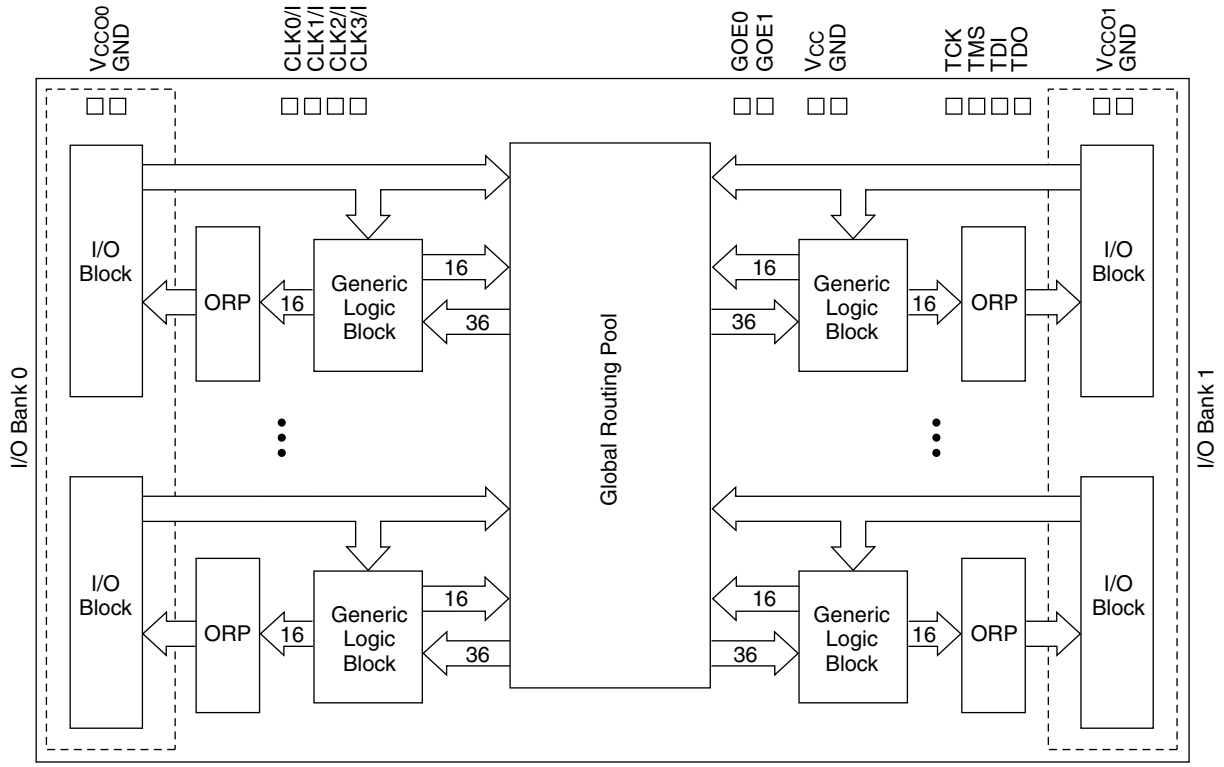

The I/Os in the ispMACH 4000 are split into two banks. Each bank has a separate I/O power supply. Inputs can support a variety of standards independent of the chip or bank power supply. Outputs support the standards compatible with the power supply provided to the bank. Support for a variety of standards helps designers implement designs in mixed voltage environments. In addition, 5V tolerant inputs are specified within an I/O bank that is connected to V_{CCO} of 3.0V to 3.6V for LVCMOS 3.3, LVTTL and PCI interfaces.

ispMACH 4000 Architecture

There are a total of two GLBs in the ispMACH 4032, increasing to 32 GLBs in the ispMACH 4512. Each GLB has 36 inputs. All GLB inputs come from the GRP and all outputs from the GLB are brought back into the GRP to be connected to the inputs of any other GLB on the device. Even if feedback signals return to the same GLB, they still must go through the GRP. This mechanism ensures that GLBs communicate with each other with consistent and predictable delays. The outputs from the GLB are also sent to the ORP. The ORP then sends them to the associated I/O cells in the I/O block.

Generic Logic Block

The ispMACH 4000 GLB consists of a programmable AND array, logic allocator, 16 macrocells and a GLB clock generator. Macrocells are decoupled from the product terms through the logic allocator and the I/O pins are decoupled from macrocells through the ORP. Figure 2 illustrates the GLB.

Downloaded from Elcodis.com electronic components distributor

Figure 2. Generic Logic Block

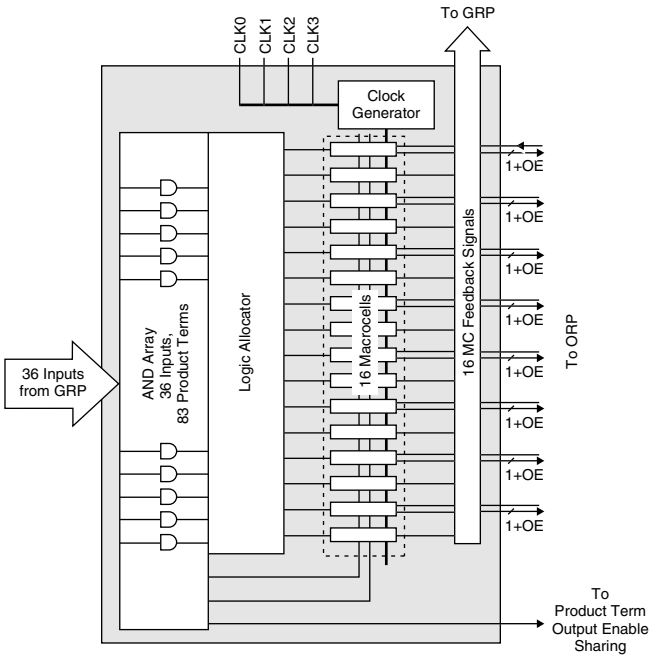

AND Array

The programmable AND Array consists of 36 inputs and 83 output product terms. The 36 inputs from the GRP are used to form 72 lines in the AND Array (true and complement of the inputs). Each line in the array can be connected to any of the 83 output product terms via a wired-AND. Each of the 80 logic product terms feed the logic allocator with the remaining three control product terms feeding the Shared PT Clock, Shared PT Initialization and Shared PT OE. The Shared PT Clock and Shared PT Initialization signals can optionally be inverted before being fed to the macrocells.

Every set of five product terms from the 80 logic product terms forms a product term cluster starting with PT0. There is one product term cluster for every macrocell in the GLB. Figure 3 is a graphical representation of the AND Array.

Downloaded from Elcodis.com electronic components distributor

Figure 3. AND Array

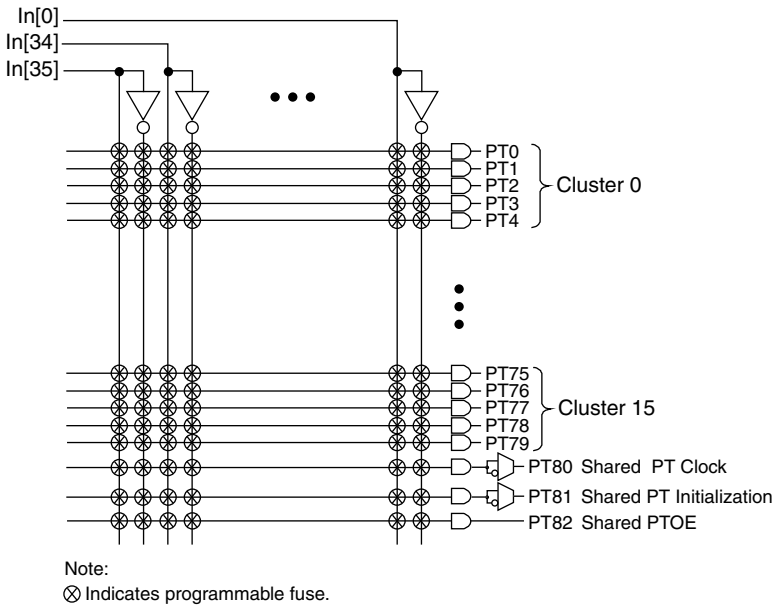

Enhanced Logic Allocator

Within the logic allocator, product terms are allocated to macrocells in product term clusters. Each product term cluster is associated with a macrocell. The cluster size for the ispMACH 4000 family is 4+1 (total 5) product terms. The software automatically considers the availability and distribution of product term clusters as it fits the functions within a GLB. The logic allocator is designed to provide three speed paths: 5-PT fast bypass path, 20-PT Speed Locking path and an up to 80-PT path. The availability of these three paths lets designers trade timing variability for increased performance.

The enhanced Logic Allocator of the ispMACH 4000 family consists of the following blocks:

- Product Term Allocator
- Cluster Allocator
- Wide Steering Logic

Figure 4 shows a macrocell slice of the Logic Allocator. There are 16 such slices in the GLB.

Figure 4. Macrocell Slice

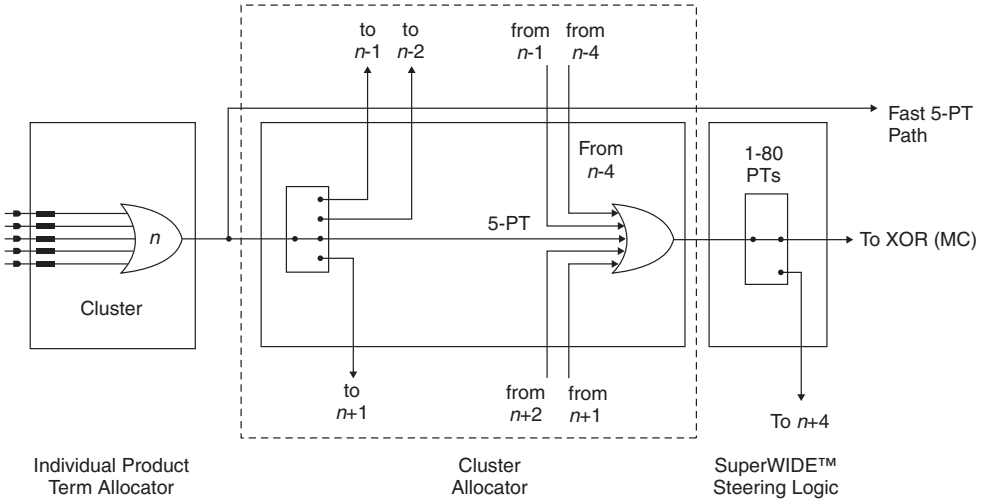

Downloaded from Elcodis.com electronic components distributor

Product Term Allocator

The product term allocator assigns product terms from a cluster to either logic or control applications as required by the design being implemented. Product terms that are used as logic are steered into a 5-input OR gate associated with the cluster. Product terms that used for control are steered either to the macrocell or I/O cell associated with the cluster. Table 3 shows the available functions for each of the five product terms in the cluster. The OR gate output connects to the associated I/O cell, providing a fast path for narrow combinatorial functions, and to the logic allocator.

Table 3. Individual PT Steering

Product Term	Logic	Control
PT*n*	Logic PT	Single PT for XOR/OR
PT*n*+1	Logic PT	Individual Clock (PT Clock)
PT*n*+2	Logic PT	Individual Initialization or Individual Clock Enable (PT Initialization/CE)
PT*n*+3	Logic PT	Individual Initialization (PT Initialization)
PT*n*+4	Logic PT	Individual OE (PTOE)

Cluster Allocator

The cluster allocator allows clusters to be steered to neighboring macrocells, thus allowing the creation of functions with more product terms. Table 4 shows which clusters can be steered to which macrocells. Used in this manner, the cluster allocator can be used to form functions of up to 20 product terms. Additionally, the cluster allocator accepts inputs from the wide steering logic. Using these inputs, functions up to 80 product terms can be created.

Table 4. Available Clusters for Each Macrocell

Macrocell	Available Clusters			
M0	—	C0	C1	C2
M1	C0	C1	C2	C3
M2	C1	C2	C3	C4
M3	C2	C3	C4	C5
M4	C3	C4	C5	C6
M5	C4	C5	C6	C7
M6	C5	C6	C7	C8
M7	C6	C7	C8	C9
M8	C7	C8	C9	C10
M9	C8	C9	C10	C11
M10	C9	C10	C11	C12
M11	C10	C11	C12	C13
M12	C11	C12	C13	C14
M13	C12	C13	C14	C15
M14	C13	C14	C15	—
M15	C14	C15	—	—

Wide Steering Logic

The wide steering logic allows the output of the cluster allocator n to be connected to the input of the cluster allocator *n*+4. Thus, cluster chains can be formed with up to 80 product terms, supporting wide product term functions and allowing performance to be increased through a single GLB implementation. Table 5 shows the product term chains.

Downloaded from Elcodis.com electronic components distributor

Table 5. Product Term Expansion Capability

Expansion Chains	Macrocells Associated with Expansion Chain (with Wrap Around)	Max PT/ Macrocell
Chain-0	M0 M4 M8 M12 M0	75
Chain-1	M1 M5 M9 M13 M1	80
Chain-2	M2 M6 M10 M14 M2	75
Chain-3	M3 M7 M11 M15 M3	70

Every time the super cluster allocator is used, there is an incremental delay of t_{EXP}. When the super cluster allocator is used, all destinations other than the one being steered to, are given the value of ground (i.e., if the super cluster is steered to M (n+4), then M (n) is ground).

Macrocell

The 16 macrocells in the GLB are driven by the 16 outputs from the logic allocator. Each macrocell contains a programmable XOR gate, a programmable register/latch, along with routing for the logic and control functions. Figure 5 shows a graphical representation of the macrocell. The macrocells feed the ORP and GRP. A direct input from the I/O cell allows designers to use the macrocell to construct high-speed input registers. A programmable delay in this path allows designers to choose between the fastest possible set-up time and zero hold time.

Figure 5. Macrocell

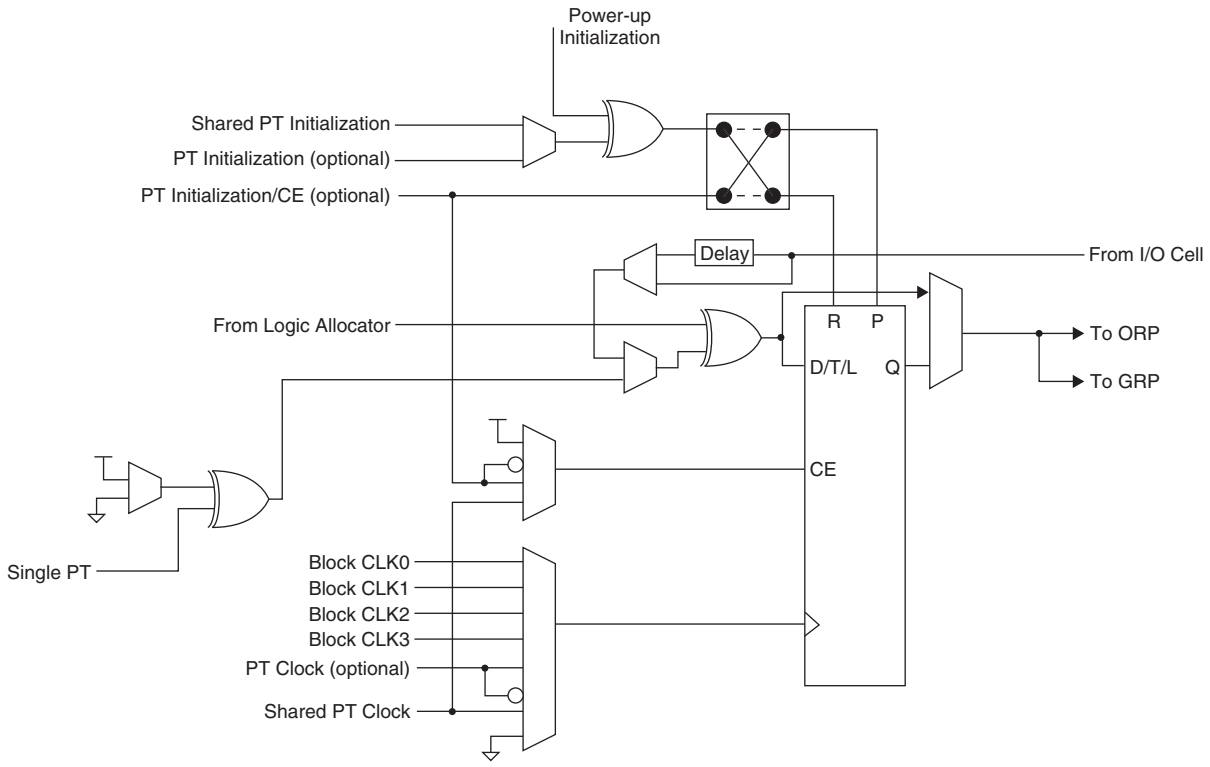

Enhanced Clock Multiplexer

The clock input to the flip-flop can select any of the four block clocks along with the shared PT clock, and true and complement forms of the optional individual term clock. An 8:1 multiplexer structure is used to select the clock. The eight sources for the clock multiplexer are as follows:

- Block CLK0
- Block CLK1

Downloaded from Elcodis.com electronic components distributor

- Block CLK2
- Block CLK3
- PT Clock
- PT Clock Inverted
- Shared PT Clock
- Ground

Clock Enable Multiplexer

Each macrocell has a 4:1 clock enable multiplexer. This allows the clock enable signal to be selected from the following four sources:

- PT Initialization/CE
- PT Initialization/CE Inverted
- Shared PT Clock
- Logic High

Initialization Control

The ispMACH 4000 family architecture accommodates both block-level and macrocell-level set and reset capability. There is one block-level initialization term that is distributed to all macrocell registers in a GLB. At the macrocell level, two product terms can be “stolen” from the cluster associated with a macrocell to be used for set/reset functionality. A reset/preset swapping feature in each macrocell allows for reset and preset to be exchanged, providing flexibility.

Note that the reset/preset swapping selection feature affects power-up reset as well. All flip-flops power up to a known state for predictable system initialization. If a macrocell is configured to SET on a signal from the block-level initialization, then that macrocell will be SET during device power-up. If a macrocell is configured to RESET on a signal from the block-level initialization or is not configured for set/reset, then that macrocell will RESET on power-up. To guarantee initialization values, the V_{CC} rise must be monotonic, and the clock must be inactive until the reset delay time has elapsed.

GLB Clock Generator

Each ispMACH 4000 device has up to four clock pins that are also routed to the GRP to be used as inputs. These pins drive a clock generator in each GLB, as shown in Figure 6. The clock generator provides four clock signals that can be used anywhere in the GLB. These four GLB clock signals can consist of a number of combinations of the true and complement edges of the global clock signals.

Figure 6. GLB Clock Generator

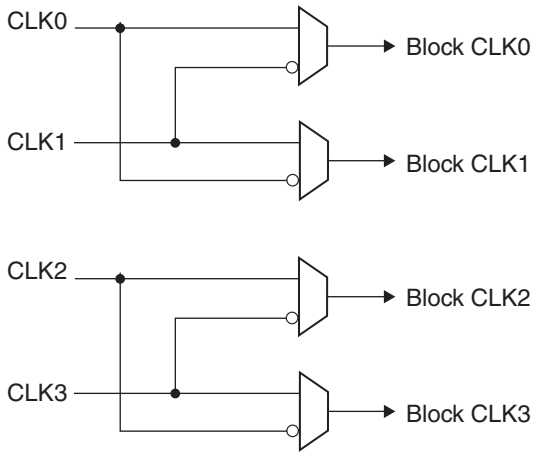

Downloaded from Elcodis.com electronic components distributor

Output Routing Pool (ORP)

The Output Routing Pool allows macrocell outputs to be connected to any of several I/O cells within an I/O block. This provides greater flexibility in determining the pinout and allows design changes to occur without affecting the pinout. The output routing pool also provides a parallel capability for routing macrocell-level OE product terms. This allows the OE product term to follow the macrocell output as it is switched between I/O cells. Additionally, the output routing pool allows the macrocell output or true and complement forms of the 5-PT bypass signal to bypass the output routing multiplexers and feed the I/O cell directly. The enhanced ORP of the ispMACH 4000 family consists of the following elements:

- Output Routing Multiplexers
- OE Routing Multiplexers
- Output Routing Pool Bypass Multiplexers

Figure 7 shows the structure of the ORP from the I/O cell perspective. This is referred to as an ORP slice. Each ORP has as many ORP slices as there are I/O cells in the corresponding I/O block.

Figure 7. ORP Slice

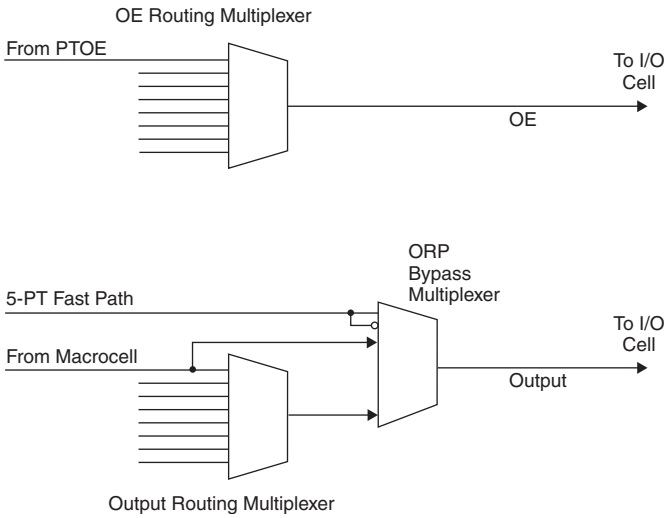

Output Routing Multiplexers

The details of connections between the macrocells and the I/O cells vary across devices and within a device dependent on the maximum number of I/Os available. Tables 5-9 provide the connection details.

Table 6. ORP Combinations for I/O Blocks with 8 I/Os

I/O Cell	Available Macrocells
I/O 0	M0, M1, M2, M3, M4, M5, M6, M7
I/O 1	M2, M3, M4, M5, M6, M7, M8, M9
I/O 2	M4, M5, M6, M7, M8, M9, M10, M11
I/O 3	M6, M7, M8, M9, M10, M11, M12, M13
I/O 4	M8, M9, M10, M11, M12, M13, M14, M15
I/O 5	M10, M11, M12, M13, M14, M15, M0, M1
I/O 6	M12, M13, M14, M15, M0, M1, M2, M3
I/O 7	M14, M15, M0, M1, M2, M3, M4, M5

Downloaded from Elcodis.com electronic components distributor

Table 7. ORP Combinations for I/O Blocks with 16 I/Os

I/O Cell	Available Macrocells
I/O 0	M0, M1, M2, M3, M4, M5, M6, M7
I/O 1	M1, M2, M3, M4, M5, M6, M7, M8
I/O 2	M2, M3, M4, M5, M6, M7, M8, M9
I/O 3	M3, M4, M5, M6, M7, M8, M9, M10
I/O 4	M4, M5, M6, M7, M8, M9, M10, M11
I/O 5	M5, M6, M7, M8, M9, M10, M11, M12
I/O 6	M6, M7, M8, M9, M10, M11, M12, M13
I/O 7	M7, M8, M9, M10, M11, M12, M13, M14
I/O 8	M8, M9, M10, M11, M12, M13, M14, M15
I/O 9	M9, M10, M11, M12, M13, M14, M15, M0
I/O 10	M10, M11, M12, M13, M14, M15, M0, M1
I/O 11	M11, M12, M13, M14, M15, M0, M1, M2
I/O 12	M12, M13, M14, M15, M0, M1, M2, M3
I/O 13	M13, M14, M15, M0, M1, M2, M3, M4
I/O 14	M14, M15, M0, M1, M2, M3, M4, M5
I/O 15	M15, M0, M1, M2, M3, M4, M5, M6

Table 8. ORP Combinations for I/O Blocks with 4 I/Os

I/O Cell	Available Macrocells
I/O 0	M0, M1, M2, M3, M4, M5, M6, M7
I/O 1	M4, M5, M6, M7, M8, M9, M10, M11
I/O 2	M8, M9, M10, M11, M12, M13, M14, M15
I/O 3	M12, M13, M14, M15, M0, M1, M2, M3

Table 9. ORP Combinations for I/O Blocks with 10 I/Os

I/O Cell	Available Macrocells
I/O 0	M0, M1, M2, M3, M4, M5, M6, M7
I/O 1	M2, M3, M4, M5, M6, M7, M8, M9
I/O 2	M4, M5, M6, M7, M8, M9, M10, M11
I/O 3	M6, M7, M8, M9, M10, M11, M12, M13
I/O 4	M8, M9, M10, M11, M12, M13, M14, M15
I/O 5	M10, M11, M12, M13, M14, M15, M0, M1
I/O 6	M12, M13, M14, M15, M0, M1, M2, M3
I/O 7	M14, M15, M0, M1, M2, M3, M4, M5
I/O 8	M2, M3, M4, M5, M6, M7, M8, M9
I/O 9	M10, M11, M12, M13, M14, M15, M0, M1

Downloaded from Elcodis.com electronic components distributor

Table 10. ORP Combinations for I/O Blocks with 12 I/Os

I/O Cell	Available Macrocells
I/O 0	M0, M1, M2, M3, M4, M5, M6, M7
I/O 1	M1, M2, M3, M4, M5, M6, M7, M8
I/O 2	M2, M3, M4, M5, M6, M7, M8, M9
I/O 3	M4, M5, M6, M7, M8, M9, M10, M11
I/O 4	M5, M6, M7, M8, M9, M10, M11, M12
I/O 5	M6, M7, M8, M9, M10, M11, M12, M13
I/O 6	M8, M9, M10, M11, M12, M13, M14, M15
I/O 7	M9, M10, M11, M12, M13, M14, M15, M0
I/O 8	M10, M11, M12, M13, M14, M15, M0, M1
I/O 9	M12, M13, M14, M15, M0, M1, M2, M3
I/O 10	M13, M14, M15, M0, M1, M2, M3, M4
I/O 11	M14, M15, M0, M1, M2, M3, M4, M5

ORP Bypass and Fast Output Multiplexers

The ORP bypass and fast-path output multiplexer is a 4:1 multiplexer and allows the 5-PT fast path to bypass the ORP and be connected directly to the pin with either the regular output or the inverted output. This multiplexer also allows the register output to bypass the ORP to achieve faster t_{CO}.

Output Enable Routing Multiplexers

The OE Routing Pool provides the corresponding local output enable (OE) product term to the I/O cell.

I/O Cell

The I/O cell contains the following programmable elements: output buffer, input buffer, OE multiplexer and bus maintenance circuitry. Figure 8 details the I/O cell.

Figure 8. I/O Cell

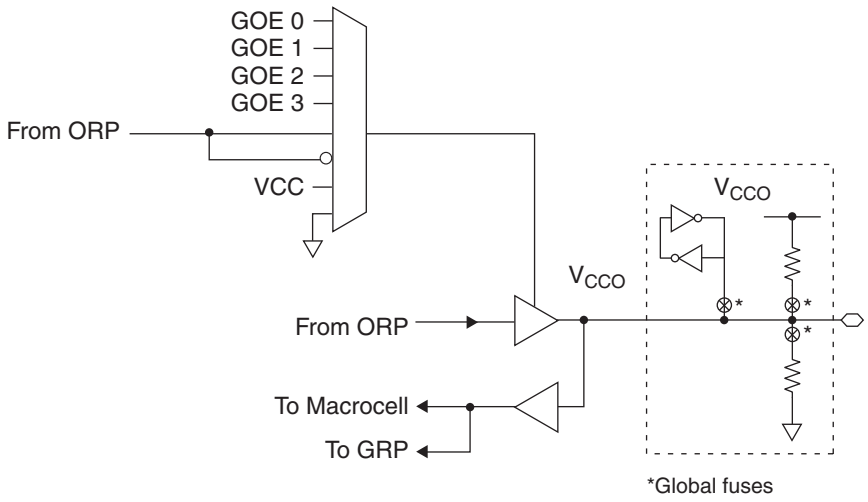

Each output supports a variety of output standards dependent on the V_{CCO} supplied to its I/O bank. Outputs can also be configured for open drain operation. Each input can be programmed to support a variety of standards, independent of the V_{CCO} supplied to its I/O bank. The I/O standards supported are:

Downloaded from Elcodis.com electronic components distributor

- LVTTL
- LVCMOS 3.3
- LVCMOS 2.5
- LVCMOS 1.8
- 3.3V PCI Compatible

All of the I/Os and dedicated inputs have the capability to provide a bus-keeper latch, Pull-up Resistor or Pull-down Resistor. A fourth option is to provide none of these. The selection is done on a global basis. The default in both hardware and software is such that when the device is erased or if the user does not specify, the input structure is configured to be a Pull-up Resistor.

Each ispMACH 4000 device I/O has an individually programmable output slew rate control bit. Each output can be individually configured for fast slew or slow slew. The typical edge rate difference between fast and slow slew setting is 20%. For high-speed designs with long, unterminated traces, the slow-slew rate will introduce fewer reflections, less noise and keep ground bounce to a minimum. For designs with short traces or well terminated lines, the fast slew rate can be used to achieve the highest speed.

Global OE Generation

Most ispMACH 4000 family devices have a 4-bit wide Global OE Bus, except the ispMACH 4032 device that has a 2-bit wide Global OE Bus. This bus is derived from a 4-bit internal global OE PT bus and two dual purpose I/O or GOE pins. Each signal that drives the bus can optionally be inverted.

Each GLB has a block-level OE PT that connects to all bits of the Global OE PT bus with four fuses. Hence, for a 256-macrocell device (with 16 blocks), each line of the bus is driven from 16 OE product terms. Figures 9 and 10 show a graphical representation of the global OE generation.

Figure 9. Global OE Generation for All Devices Except ispMACH 4032

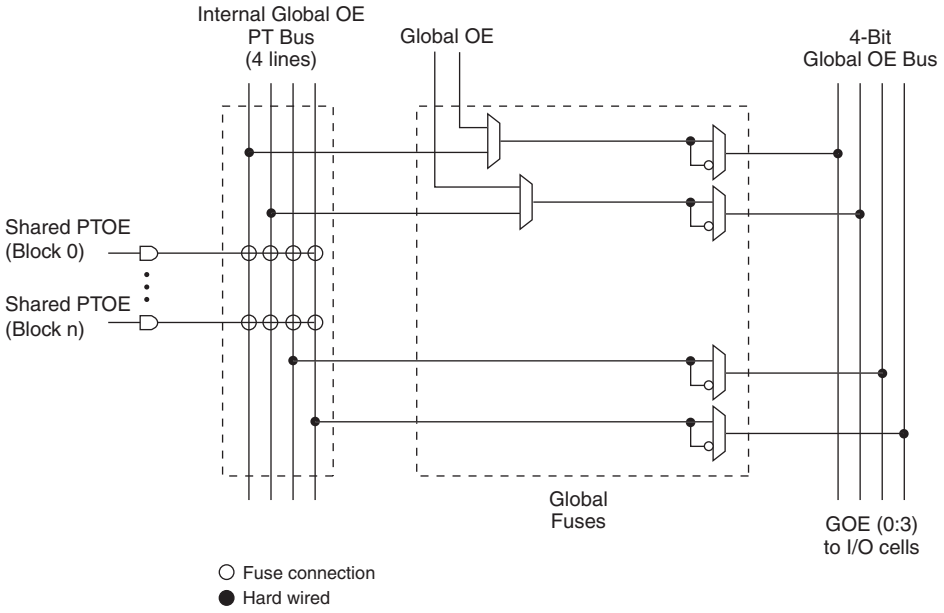

Downloaded from Elcodis.com electronic components distributor

Figure 10. Global OE Generation for ispMACH 4032

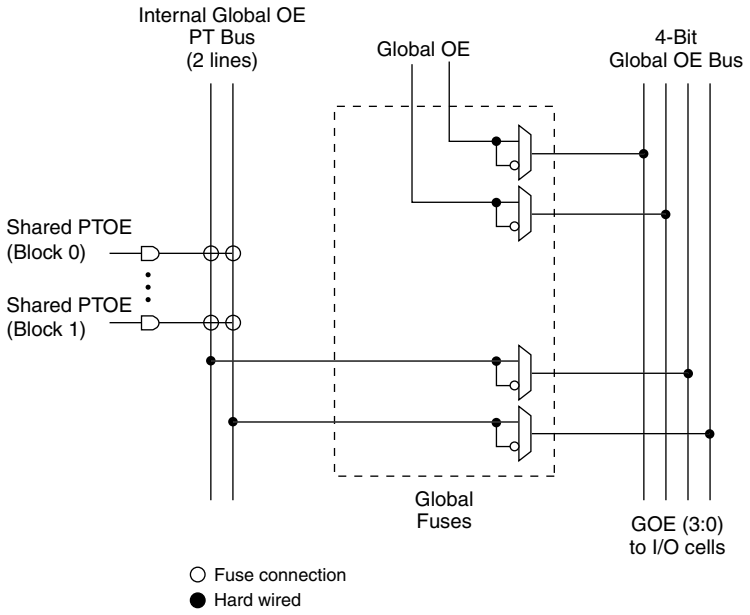

Zero Power/Low Power and Power Management

The ispMACH 4000 family is designed with high speed low power design techniques to offer both high speed and low power. With an advanced E^2 low power cell and non sense-amplifier design approach (full CMOS logic approach), the ispMACH 4000 family offers SuperFAST pin-to-pin speeds, while simultaneously delivering low standby power without needing any “turbo bits” or other power management schemes associated with a traditional sense-amplifier approach.

The zero power ispMACH 4000Z is based on the 1.8V ispMACH 4000C family. With innovative circuit design changes, the ispMACH 4000Z family is able to achieve the industry’s “lowest static power”.

IEEE 1149.1-Compliant Boundary Scan Testability

All ispMACH 4000 devices have boundary scan cells and are compliant to the IEEE 1149.1 standard. This allows functional testing of the circuit board on which the device is mounted through a serial scan path that can access all critical logic notes. Internal registers are linked internally, allowing test data to be shifted in and loaded directly onto test nodes, or test node data to be captured and shifted out for verification. In addition, these devices can be linked into a board-level serial scan path for more board-level testing. The test access port operates with an LVCMOS interface that corresponds to the power supply voltage.

I/O Quick Configuration

To facilitate the most efficient board test, the physical nature of the I/O cells must be set before running any continuity tests. As these tests are fast, by nature, the overhead and time that is required for configuration of the I/Os’ physical nature should be minimal so that board test time is minimized. The ispMACH 4000 family of devices allows this by offering the user the ability to quickly configure the physical nature of the I/O cells. This quick configuration takes milliseconds to complete, whereas it takes seconds for the entire device to be programmed. Lattice's ispVM® System programming software can either perform the quick configuration through the PC parallel port, or can generate the ATE or test vectors necessary for a third-party test system.

Downloaded from Elcodis.com electronic components distributor

IEEE 1532-Compliant In-System Programming

Programming devices in-system provides a number of significant benefits including: rapid prototyping, lower inventory levels, higher quality and the ability to make in-field modifications. All ispMACH 4000 devices provide In-System Programming (ISP™) capability through the Boundary Scan Test Access Port. This capability has been implemented in a manner that ensures that the port remains complaint to the IEEE 1149.1 standard. By using IEEE 1149.1 as the communication interface through which ISP is achieved, users get the benefit of a standard, well-defined interface. All ispMACH 4000 devices are also compliant with the IEEE 1532 standard.

The ispMACH 4000 devices can be programmed across the commercial temperature and voltage range. The PC-based Lattice software facilitates in-system programming of ispMACH 4000 devices. The software takes the JEDEC file output produced by the design implementation software, along with information about the scan chain, and creates a set of vectors used to drive the scan chain. The software can use these vectors to drive a scan chain via the parallel port of a PC. Alternatively, the software can output files in formats understood by common automated test equipment. This equipment can then be used to program ispMACH 4000 devices during the testing of a circuit board.

User Electronic Signature

The User Electronic Signature (UES) allows the designer to include identification bits or serial numbers inside the device, stored in E^2CMOS memory. The ispMACH 4000 device contains 32 UES bits that can be configured by the user to store unique data such as ID codes, revision numbers or inventory control codes.

Security Bit

A programmable security bit is provided on the ispMACH 4000 devices as a deterrent to unauthorized copying of the array configuration patterns. Once programmed, this bit defeats readback of the programmed pattern by a device programmer, securing proprietary designs from competitors. Programming and verification are also defeated by the security bit. The bit can only be reset by erasing the entire device.

Hot Socketing

The ispMACH 4000 devices are well-suited for applications that require hot socketing capability. Hot socketing a device requires that the device, during power-up and down, can tolerate active signals on the I/Os and inputs without being damaged. Additionally, it requires that the effects of I/O pin loading be minimal on active signals. The ispMACH 4000 devices provide this capability for input voltages in the range 0V to 3.0V.

Density Migration

The ispMACH 4000 family has been designed to ensure that different density devices in the same package have the same pin-out. Furthermore, the architecture ensures a high success rate when performing design migration from lower density parts to higher density parts. In many cases, it is possible to shift a lower utilization design targeted for a high density device to a lower density device. However, the exact details of the final resource utilization will impact the likely success in each case.

Downloaded from Elcodis.com electronic components distributor

Absolute Maximum Ratings[1, 2, 3]

	ispMACH 4000C/Z (1.8V)	ispMACH 4000B (2.5V)	ispMACH 4000V (3.3V)
Supply Voltage (V_{CC})	-0.5 to 2.5V	-0.5 to 5.5V	-0.5 to 5.5V
Output Supply Voltage (V_{CCO})	-0.5 to 4.5V	-0.5 to 4.5V	-0.5 to 4.5V
Input or I/O Tristate Voltage Applied[4, 5]	-0.5 to 5.5V	-0.5 to 5.5V	-0.5 to 5.5V
Storage Temperature	-65 to 150°C	-65 to 150°C	-65 to 150°C
Junction Temperature (T_j) with Power Applied	-55 to 150°C	-55 to 150°C	-55 to 150°C

1. Stress above those listed under the “Absolute Maximum Ratings” may cause permanent damage to the device. Functional operation of the device at these or any other conditions above those indicated in the operational sections of this specification is not implied.
2. Compliance with Lattice Thermal Management document is required.
3. All voltages referenced to GND.
4. Undershoot of -2V and overshoot of (V_{IH} (MAX) + 2V), up to a total pin voltage of 6.0V, is permitted for a duration of < 20ns.
5. Maximum of 64 I/Os per device with VIN > 3.6V is allowed.

Recommended Operating Conditions

Symbol	Parameter		Min.	Max.	Units
V_{CC}	Supply Voltage for 1.8V Devices	ispMACH 4000C	1.65	1.95	V
		ispMACH 4000Z	1.7	1.9	V
		ispMACH 4000Z, Extended Functional Voltage Operation	1.6[1, 2]	1.9	V
	Supply Voltage for 2.5V Devices		2.3	2.7	V
	Supply Voltage for 3.3V Devices		3.0	3.6	V
T_j	Junction Temperature (Commercial)		0	90	C
	Junction Temperature (Industrial)		-40	105	C
	Junction Temperature (Extended)		-40	130	C

1. Devices operating at 1.6V can expect performance degradation up to 35%.
2. Applicable for devices with 2004 date codes and later. Contact factory for ordering instructions.

Erase Reprogram Specifications

Parameter	Min.	Max.	Units
Erase/Reprogram Cycle	1,000	—	Cycles

Note: Valid over commercial temperature range.

Hot Socketing Characteristics[1,2,3]

Symbol	Parameter	Condition	Min.	Typ.	Max.	Units
I_{DK}	Input or I/O Leakage Current	$0 \le V_{IN} \le 3.0V$, Tj = 105°C	—	±30	±150	µA
		$0 \le V_{IN} \le 3.0V$, Tj = 130°C	—	±30	±200	µA

1. Insensitive to sequence of V_{CC} or V_{CCO}. However, assumes monotonic rise/fall rates for V_{CC} and V_{CCO}, provided (V_{IN} - V_{CCO}) ≤ 3.6V.
2. $0 < V_{CC} < V_{CC}$ (MAX), $0 < V_{CCO} < V_{CCO}$ (MAX).
3. I_{DK} is additive to I_{PU}, I_{PD} or I_{BH}. Device defaults to pull-up until fuse circuitry is active.

Downloaded from Elcodis.com electronic components distributor

I/O Recommended Operating Conditions

Standard	V_{CCO} (V)[1]	
	Min.	Max.
LVTTL	3.0	3.6
LVCMOS 3.3	3.0	3.6
Extended LVCMOS 3.3[2]	2.7	3.6
LVCMOS 2.5	2.3	2.7
LVCMOS 1.8	1.65	1.95
PCI 3.3	3.0	3.6

1. Typical values for V_{CCO} are the average of the min. and max. values.
2. ispMACH 4000Z only.

DC Electrical Characteristics

Over Recommended Operating Conditions

Symbol	Parameter	Condition	Min.	Typ.	Max.	Units
I_{IL}, I_{IH}[1, 4]	Input Leakage Current (ispMACH 4000Z)	$0 \le V_{IN} < V_{CCO}$	—	0.5	1	µA
I_{IH}[1]	Input High Leakage Current (ispMACH 4000Z)	$V_{CCO} < V_{IN} \le 5.5V$	—	—	10	µA
I_{IL}, I_{IH}[1]	Input Leakage Current (ispMACH 4000V/B/C)	$0 \le V_{IN} \le 3.6V$, $T_j = 105°C$	—	—	10	µA
		$0 \le V_{IN} \le 3.6V$, $T_j = 130°C$	—	—	15	µA
I_{IH}[1,2]	Input High Leakage Current (ispMACH 4000V/B/C)	$3.6V < V_{IN} \le 5.5V$, $T_j = 105°C$ $3.0V \le V_{CCO} \le 3.6V$	—	—	20	µA
		$3.6V < V_{IN} \le 5.5V$, $T_j = 130°C$ $3.0V \le V_{CCO} \le 3.6V$	—	—	50	µA
I_{PU}	I/O Weak Pull-up Resistor Current (ispMACH 4000Z)	$0 \le V_{IN} \le 0.7V_{CCO}$	-30	—	-150	µA
	I/O Weak Pull-up Resistor Current (ispMACH 4000V/B/C)	$0 \le V_{IN} \le 0.7V_{CCO}$	-30	—	-200	µA
I_{PD}	I/O Weak Pull-down Resistor Current	V_{IL} (MAX) $\le V_{IN} \le V_{IH}$ (MIN)	30	—	150	µA
I_{BHLS}	Bus Hold Low Sustaining Current	$V_{IN} = V_{IL}$ (MAX)	30	—	—	µA
I_{BHHS}	Bus Hold High Sustaining Current	$V_{IN} = 0.7\ V_{CCO}$	-30	—	—	µA
I_{BHLO}	Bus Hold Low Overdrive Current	$0V \le V_{IN} \le V_{BHT}$	—	—	150	µA
I_{BHHO}	Bus Hold High Overdrive Current	$V_{BHT} \le V_{IN} \le V_{CCO}$	—	—	-150	µA
V_{BHT}	Bus Hold Trip Points	—	V_{CCO} * 0.35	—	V_{CCO} * 0.65	V
C_1	I/O Capacitance[3]	V_{CCO} = 3.3V, 2.5V, 1.8V	—	8	—	pf
		V_{CC} = 1.8V, V_{IO} = 0 to V_{IH} (MAX)	—		—	
C_2	Clock Capacitance[3]	V_{CCO} = 3.3V, 2.5V, 1.8V	—	6	—	pf
		V_{CC} = 1.8V, V_{IO} = 0 to V_{IH} (MAX)	—		—	
C_3	Global Input Capacitance[3]	V_{CCO} = 3.3V, 2.5V, 1.8V	—	6	—	pf
		V_{CC} = 1.8V, V_{IO} = 0 to V_{IH} (MAX)	—		—	

1. Input or I/O leakage current is measured with the pin configured as an input or as an I/O with the output driver tristated. It is not measured with the output driver active. Bus maintenance circuits are disabled.
2. 5V tolerant inputs and I/O should only be placed in banks where $3.0V \le V_{CCO} \le 3.6V$.
3. $T_A = 25°C$, f = 1.0MHz
4. I_{IH} excursions of up to 1.5µA maximum per pin above the spec limit may be observed for certain voltage conditions on no more than 10% of the device's I/O pins.

Downloaded from Elcodis.com electronic components distributor

Supply Current, ispMACH 4000V/B/C

Over Recommended Operating Conditions

Symbol	Parameter	Condition	Min.	Typ.	Max.	Units
ispMACH 4032V/B/C						
ICC[1,2,3]	Operating Power Supply Current	Vcc = 3.3V	—	11.8	—	mA
		Vcc = 2.5V	—	11.8	—	mA
		Vcc = 1.8V	—	1.8	—	mA
ICC[4]	Standby Power Supply Current	Vcc = 3.3V	—	11.3	—	mA
		Vcc = 2.5V	—	11.3	—	mA
		Vcc = 1.8V	—	1.3	—	mA
ispMACH 4064V/B/C						
ICC[1,2,3]	Operating Power Supply Current	Vcc = 3.3V	—	12	—	mA
		Vcc = 2.5V	—	12	—	mA
		Vcc = 1.8V	—	2	—	mA
ICC[5]	Standby Power Supply Current	Vcc = 3.3V	—	11.5	—	mA
		Vcc = 2.5V	—	11.5	—	mA
		Vcc = 1.8V	—	1.5	—	mA
ispMACH 4128V/B/C						
ICC[1,2,3]	Operating Power Supply Current	Vcc = 3.3V	—	12	—	mA
		Vcc = 2.5V	—	12	—	mA
		Vcc = 1.8V	—	2	—	mA
ICC[4]	Standby Power Supply Current	Vcc = 3.3V	—	11.5	—	mA
		Vcc = 2.5V	—	11.5	—	mA
		Vcc = 1.8V	—	1.5	—	mA
ispMACH 4256V/B/C						
I_{CC}[1,2,3]	Operating Power Supply Current	Vcc = 3.3V	—	12.5	—	mA
		Vcc = 2.5V	—	12.5	—	mA
		Vcc = 1.8V	—	2.5	—	mA
I_{CC}[4]	Standby Power Supply Current	Vcc = 3.3V	—	12	—	mA
		Vcc = 2.5V	—	12	—	mA
		Vcc = 1.8V	—	2	—	mA
ispMACH 4384V/B/C						
I_{CC}[1,2,3]	Operating Power Supply Current	Vcc = 3.3V	—	13.5	—	mA
		Vcc = 2.5V	—	13.5	—	mA
		Vcc = 1.8V	—	3.5	—	mA
I_{CC}[4]	Standby Power Supply Current	Vcc = 3.3V	—	12.5	—	mA
		Vcc = 2.5V	—	12.5	—	mA
		Vcc = 1.8V	—	2.5	—	mA
ispMACH 4512V/B/C						
I_{CC}[1,2,3]	Operating Power Supply Current	Vcc = 3.3V	—	14	—	mA
		Vcc = 2.5V	—	14	—	mA
		Vcc = 1.8V	—	4	—	mA

Downloaded from Elcodis.com electronic components distributor

Supply Current, ispMACH 4000V/B/C (Cont.)

Over Recommended Operating Conditions

Symbol	Parameter	Condition	Min.	Typ.	Max.	Units
I_{CC}[4]	Standby Power Supply Current	Vcc = 3.3V	—	13	—	mA
		Vcc = 2.5V	—	13	—	mA
		Vcc = 1.8V	—	3	—	mA

1. T_A = 25°C, frequency = 1.0 MHz.
2. Device configured with 16-bit counters.
3. I_{CC} varies with specific device configuration and operating frequency.
4. T_A = 25°C

Supply Current, ispMACH 4000Z

Over Recommended Operating Conditions

Symbol	Parameter	Condition	Min.	Typ.	Max.	Units
ispMACH 4032ZC						
ICC[1, 2, 3, 5]	Operating Power Supply Current	Vcc = 1.8V, T_A = 25°C	—	50	—	µA
		Vcc = 1.9V, T_A = 70°C	—	58	—	µA
		Vcc = 1.9V, T_A = 85°C	—	60	—	µA
		Vcc = 1.9V, T_A = 125°C	—	70	—	µA
ICC[4, 5]	Standby Power Supply Current	Vcc = 1.8V, T_A = 25°C	—	10	—	µA
		Vcc = 1.9V, T_A = 70°C	—	13	20	µA
		Vcc = 1.9V, T_A = 85°C	—	15	25	µA
		Vcc = 1.9V, T_A = 125°C	—	22	—	µA
ispMACH 4064ZC						
ICC[1, 2, 3, 5]	Operating Power Supply Current	Vcc = 1.8V, T_A = 25°C	—	80	—	µA
		Vcc = 1.9V, T_A = 70°C	—	89	—	µA
		Vcc = 1.9V, T_A = 85°C	—	92	—	µA
		Vcc = 1.9V, T_A = 125°C	—	109	—	µA
ICC[4, 5]	Standby Power Supply Current	Vcc = 1.8V, T_A = 25°C	—	11	—	µA
		Vcc = 1.9V, T_A = 70°C	—	15	25	µA
		Vcc = 1.9V, T_A = 85°C	—	18	35	µA
		Vcc = 1.9V, T_A = 125°C	—	37	—	µA
ispMACH 4128ZC						
ICC[1, 2, 3, 5]	Operating Power Supply Current	Vcc = 1.8V, T_A = 25°C	—	168	—	µA
		Vcc = 1.9V, T_A = 70°C	—	190	—	µA
		Vcc = 1.9V, T_A = 85°C	—	195	—	µA
		Vcc = 1.9V, T_A = 125°C	—	212	—	µA
ICC[4, 5]	Standby Power Supply Current	Vcc = 1.8V, T_A = 25°C	—	12	—	µA
		Vcc = 1.9V, T_A = 70°C	—	16	35	µA
		Vcc = 1.9V, T_A = 85°C	—	19	50	µA
		Vcc = 1.9V, T_A = 125°C	—	42	—	µA

Downloaded from Elcodis.com electronic components distributor

Supply Current, ispMACH 4000Z (Cont.)

Over Recommended Operating Conditions

Symbol	Parameter	Condition	Min.	Typ.	Max.	Units
ispMACH 4256ZC						
$ICC^{1, 2, 3, 5}$	Operating Power Supply Current	Vcc = 1.8V, T_A = 25°C	—	341	—	µA
		Vcc = 1.9V, T_A = 70°C	—	361	—	µA
		Vcc = 1.9V, T_A = 85°C	—	372	—	µA
		Vcc = 1.9V, T_A = 125°C	—	468	—	µA
$ICC^{4, 5}$	Standby Power Supply Current	Vcc = 1.8V, T_A = 25°C	—	13	—	µA
		Vcc = 1.9V, T_A = 70°C	—	32	55	µA
		Vcc = 1.9V, T_A = 85°C	—	43	90	µA
		Vcc = 1.9V, T_A = 125°C	—	135	—	µA

1. T_A = 25°C, frequency = 1.0 MHz.
2. Device configured with 16-bit counters.
3. I_{CC} varies with specific device configuration and operating frequency.
4. V_{CCO} = 3.6V, V_{IN} = 0V or $V_{CCO,}$ bus maintenance turned off. V_{IN} above V_{CCO} will add transient current above the specified standby I_{CC}.
5. Includes V_{CCO} current without output loading.

Downloaded from Elcodis.com electronic components distributor

I/O DC Electrical Characteristics

Over Recommended Operating Conditions

Standard	V_{IL}		V_{IH}		V_{OL}	V_{OH}	I_{OL}[1]	I_{OH}[1]
	Min (V)	Max (V)	Min (V)	Max (V)	Max (V)	Min (V)	(mA)	(mA)
LVTTL	-0.3	0.80	2.0	5.5	0.40	V_{CCO} - 0.40	8.0	-4.0
					0.20	V_{CCO} - 0.20	0.1	-0.1
LVCMOS 3.3	-0.3	0.80	2.0	5.5	0.40	V_{CCO} - 0.40	8.0	-4.0
					0.20	V_{CCO} - 0.20	0.1	-0.1
LVCMOS 2.5	-0.3	0.70	1.70	3.6	0.40	V_{CCO} - 0.40	8.0	-4.0
					0.20	V_{CCO} - 0.20	0.1	-0.1
LVCMOS 1.8 (4000V/B)	-0.3	0.63	1.17	3.6	0.40	V_{CCO} - 0.45	2.0	-2.0
					0.20	V_{CCO} - 0.20	0.1	-0.1
LVCMOS 1.8 (4000C/Z)	-0.3	0.35 * V_{CC}	0.65 * V_{CC}	3.6	0.40	V_{CCO} - 0.45	2.0	-2.0
					0.20	V_{CCO} - 0.20	0.1	-0.1
PCI 3.3 (4000V/B)	-0.3	1.08	1.5	5.5	0.1 V_{CCO}	0.9 V_{CCO}	1.5	-0.5
PCI 3.3 (4000C/Z)	-0.3	0.3 * 3.3 * (V_{CC} / 1.8)	0.5 * 3.3 * (V_{CC} / 1.8)	5.5	0.1 V_{CCO}	0.9 V_{CCO}	1.5	-0.5

1. The average DC current drawn by I/Os between adjacent bank GND connections, or between the last GND in an I/O bank and the end of the I/O bank, as shown in the logic signals connection table, shall not exceed *n**8mA. Where *n* is the number of I/Os between bank GND connections or between the last GND in a bank and the end of a bank.

Downloaded from Elcodis.com electronic components distributor

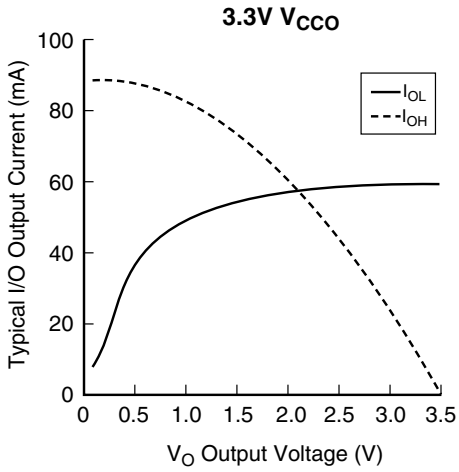

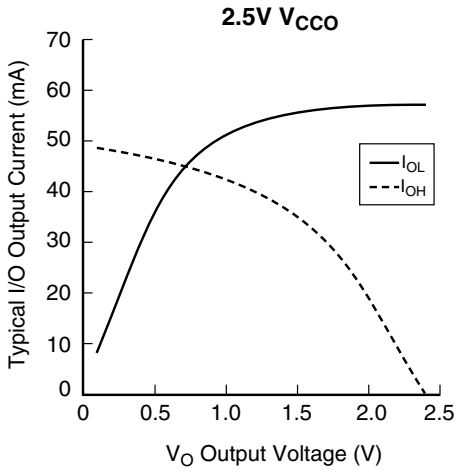

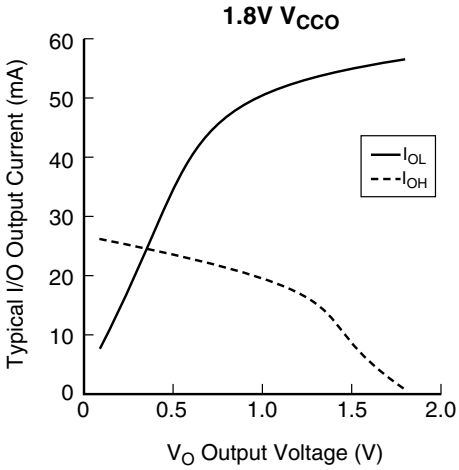

Downloaded from Elcodis.com electronic components distributor

ispMACH 4000V/B/C External Switching Characteristics

Over Recommended Operating Conditions

Parameter	Description[1, 2, 3]	-25		-27		-3		-35		Units
		Min.	Max.	Min.	Max.	Min.	Max.	Min.	Max.	
t_{PD}	5-PT bypass combinatorial propagation delay	—	2.5	—	2.7	—	3.0	—	3.5	ns
t_{PD_MC}	20-PT combinatorial propagation delay through macrocell	—	3.2	—	3.5	—	3.8	—	4.2	ns
t_S	GLB register setup time before clock	1.8	—	1.8	—	2.0	—	2.0	—	ns
t_{ST}	GLB register setup time before clock with T-type register	2.0	—	2.0	—	2.2	—	2.2	—	ns
t_{SIR}	GLB register setup time before clock, input register path	0.7	—	1.0	—	1.0	—	1.0	—	ns
t_{SIRZ}	GLB register setup time before clock with zero hold	1.7	—	2.0	—	2.0	—	2.0	—	ns
t_H	GLB register hold time after clock	0.0	—	0.0	—	0.0	—	0.0	—	ns
t_{HT}	GLB register hold time after clock with T-type register	0.0	—	0.0	—	0.0	—	0.0	—	ns
t_{HIR}	GLB register hold time after clock, input register path	0.9	—	1.0	—	1.0	—	1.0	—	ns
t_{HIRZ}	GLB register hold time after clock, input register path with zero hold	0.0	—	0.0	—	0.0	—	0.0	—	ns
t_{CO}	GLB register clock-to-output delay	—	2.2	—	2.7	—	2.7	—	2.7	ns
t_R	External reset pin to output delay	—	3.5	—	4.0	—	4.4	—	4.5	ns
t_{RW}	External reset pulse duration	1.5	—	1.5	—	1.5	—	1.5	-	ns
$t_{PTOE/DIS}$	Input to output local product term output enable/disable	—	4.0	—	4.5	—	5.0	—	5.5	ns
$t_{GPTOE/DIS}$	Input to output global product term output enable/disable	—	5.0	—	6.5	—	8.0	—	8.0	ns
$t_{GOE/DIS}$	Global OE input to output enable/disable	—	3.0	—	3.5	—	4.0	—	4.5	ns
t_{CW}	Global clock width, high or low	1.1	—	1.3	—	1.3	—	1.3	—	ns
t_{GW}	Global gate width low (for low transparent) or high (for high transparent)	1.1	—	1.3	—	1.3	—	1.3	—	ns
t_{WIR}	Input register clock width, high or low	1.1	—	1.3	—	1.3	—	1.3	—	ns
f_{MAX}[4]	Clock frequency with internal feedback	—	400	—	333	—	322	—	322	MHz
f_{MAX} (Ext.)	Clock frequency with external feedback, $[1/(t_S + t_{CO})]$	—	250	—	222	—	212	—	212	MHz

1. Timing numbers are based on default LVCMOS 1.8 I/O buffers. Use timing adjusters provided to calculate other standards. Timing v.3.2
2. Measured using standard switching circuit, assuming GRP loading of 1 and 1 output switching.
3. Pulse widths and clock widths less than minimum will cause unknown behavior.
4. Standard 16-bit counter using GRP feedback.

Downloaded from Elcodis.com electronic components distributor

ispMACH 4000V/B/C External Switching Characteristics (Cont.)

Over Recommended Operating Conditions

Parameter	Description[1, 2, 3]	-5		-75		-10		Units
		Min.	Max.	Min.	Max.	Min.	Max.	
t_{PD}	5-PT bypass combinatorial propagation delay	—	5.0	—	7.5	—	10.0	ns
t_{PD_MC}	20-PT combinatorial propagation delay through macrocell	—	5.5	—	8.0	—	10.5	ns
t_S	GLB register setup time before clock	3.0	—	4.5	—	5.5	—	ns
t_{ST}	GLB register setup time before clock with T-type register	3.2	—	4.7	—	5.5	—	ns
t_{SIR}	GLB register setup time before clock, input register path	1.2	—	1.7	—	1.7	—	ns
t_{SIRZ}	GLB register setup time before clock with zero hold	2.2	—	2.7	—	2.7	—	ns
t_H	GLB register hold time after clock	0.0	—	0.0	—	0.0	—	ns
t_{HT}	GLB register hold time after clock with T-type register	0.0	—	0.0	—	0.0	—	ns
t_{HIR}	GLB register hold time after clock, input register path	1.0	—	1.0	—	1.0	—	ns
t_{HIRZ}	GLB register hold time after clock, input register path with zero hold	0.0	—	0.0	—	0.0	—	ns
t_{CO}	GLB register clock-to-output delay	—	3.4	—	4.5	—	6.0	ns
t_R	External reset pin to output delay	—	6.3	—	9.0	—	10.5	ns
t_{RW}	External reset pulse duration	2.0	—	4.0	—	4.0	—	ns
$t_{PTOE/DIS}$	Input to output local product term output enable/disable	—	7.0	—	9.0	—	10.5	ns
$t_{GPTOE/DIS}$	Input to output global product term output enable/disable	—	9.0	—	10.3	—	12.0	ns
$t_{GOE/DIS}$	Global OE input to output enable/disable	—	5.0	—	7.0	—	8.0	ns
t_{CW}	Global clock width, high or low	2.2	—	2.8	—	4.0	—	ns
t_{GW}	Global gate width low (for low transparent) or high (for high transparent)	2.2	—	2.8	—	4.0	—	ns
t_{WIR}	Input register clock width, high or low	2.2	—	2.8	—	4.0		ns
f_{MAX}[4]	Clock frequency with internal feedback	—	227	—	168	—	125	MHz
f_{MAX} (Ext.)	Clock frequency with external feedback, [1/ (t_S + t_{CO})]	—	156	—	111	—	86	MHz

1. Timing numbers are based on default LVCMOS 1.8 I/O buffers. Use timing adjusters provided to calculate other standards. Timing v.3.2
2. Measured using standard switching circuit, assuming GRP loading of 1 and 1 output switching.
3. Pulse widths and clock widths less than minimum will cause unknown behavior.
4. Standard 16-bit counter using GRP feedback.

Downloaded from Elcodis.com electronic components distributor

ispMACH 4000Z External Switching Characteristics

Over Recommended Operating Conditions

Parameter	Description[1, 2, 3]	-35		-37		-42		Units
		Min.	Max.	Min.	Max.	Min.	Max.	
t_{PD}	5-PT bypass combinatorial propagation delay	—	3.5	—	3.7	—	4.2	ns
t_{PD_MC}	20-PT combinatorial propagation delay through macrocell	—	4.4	—	4.7	—	5.7	ns
t_S	GLB register setup time before clock	2.2	—	2.5	—	2.7	—	ns
t_{ST}	GLB register setup time before clock with T-type register	2.4	—	2.7	—	2.9	—	ns
t_{SIR}	GLB register setup time before clock, input register path	1.0	—	1.1	—	1.3	—	ns
t_{SIRZ}	GLB register setup time before clock with zero hold	2.0	—	2.1	—	2.6	—	ns
t_H	GLB register hold time after clock	0.0	—	0.0	—	0.0	—	ns
t_{HT}	GLB register hold time after clock with T-type register	0.0	—	0.0	—	0.0	—	ns
t_{HIR}	GLB register hold time after clock, input register path	1.0	—	1.0	—	1.3	—	ns
t_{HIRZ}	GLB register hold time after clock, input register path with zero hold	0.0	—	0.0	—	0.0	—	ns
t_{CO}	GLB register clock-to-output delay	—	3.0	—	3.2	—	3.5	ns
t_R	External reset pin to output delay	—	5.0	—	6.0	—	7.3	ns
t_{RW}	External reset pulse duration	1.5	—	1.7	—	2.0	—	ns
$t_{PTOE/DIS}$	Input to output local product term output enable/disable	—	7.0	—	8.0	—	8.0	ns
$t_{GPTOE/DIS}$	Input to output global product term output enable/disable	—	6.5	—	7.0	—	8.0	ns
$t_{GOE/DIS}$	Global OE input to output enable/disable	—	4.5	—	4.5	—	4.8	ns
t_{CW}	Global clock width, high or low	1.0	—	1.5	—	1.8	—	ns
t_{GW}	Global gate width low (for low transparent) or high (for high transparent)	1.0	—	1.5	—	1.8	—	ns
t_{WIR}	Input register clock width, high or low	1.0	—	1.5	—	1.8	—	ns
f_{MAX}[4]	Clock frequency with internal feedback	—	267	—	250	—	220	MHz
f_{MAX} (Ext.)	clock frequency with external feedback, $[1 / (t_S + t_{CO})]$	—	192	—	175	—	161	MHz

1. Timing numbers are based on default LVCMOS 1.8 I/O buffers. Use timing adjusters provided to calculate other standards.
2. Measured using standard switching GRP loading of 1 and 1 output switching.
3. Pulse widths and clock widths less than minimum will cause unknown behavior.
4. Standard 16-bit counter using GRP feedback.

Timing v.2.2

Downloaded from Elcodis.com electronic components distributor

ispMACH 4000Z External Switching Characteristics (Cont.)

Over Recommended Operating Conditions

Parameter	Description[1, 2, 3]	-45		-5		-75		Units
		Min.	Max.	Min.	Max.	Min.	Max.	
t_{PD}	5-PT bypass combinatorial propagation delay	—	4.5	—	5.0	—	7.5	ns
t_{PD_MC}	20-PT combinatorial propagation delay through macrocell	—	5.8	—	6.0	—	8.0	ns
t_S	GLB register setup time before clock	2.9	—	3.0	—	4.5	—	ns
t_{ST}	GLB register setup time before clock with T-type register	3.1	—	3.2	—	4.7	—	ns
t_{SIR}	GLB register setup time before clock, input register path	1.3	—	1.3	—	1.4	—	ns
t_{SIRZ}	GLB register setup time before clock with zero hold	2.6	—	2.6	—	2.7	—	ns
t_H	GLB register hold time after clock	0.0	—	0.0	—	0.0	—	ns
t_{HT}	GLB register hold time after clock with T-type register	0.0	—	0.0	—	0.0	—	ns
t_{HIR}	GLB register hold time after clock, input register path	1.3	—	1.3	—	1.3	—	ns
t_{HIRZ}	GLB register hold time after clock, input register path with zero hold	0.0	—	0.0	—	0.0	—	ns
t_{CO}	GLB register clock-to-output delay	—	3.8	—	4.2	—	4.5	ns
t_R	External reset pin to output delay	—	7.5	—	7.5	—	9.0	ns
t_{RW}	External reset pulse duration	2.0	—	2.0	—	4.0	—	ns
$t_{PTOE/DIS}$	Input to output local product term output enable/disable	—	8.2	—	8.5	—	9.0	ns
$t_{GPTOE/DIS}$	Input to output global product term output enable/disable	—	10.0	—	10.0	—	10.5	ns
$t_{GOE/DIS}$	Global OE input to output enable/disable	—	5.5	—	6.0	—	7.0	ns
t_{CW}	Global clock width, high or low	1.8	—	2.0	—	2.8	—	ns
t_{GW}	Global gate width low (for low transparent) or high (for high transparent)	1.8	—	2.0	—	2.8	—	ns
t_{WIR}	Input register clock width, high or low	1.8	—	2.0	—	2.8	—	ns
f_{MAX}[4]	Clock frequency with internal feedback	—	200	—	200	—	168	MHz
f_{MAX} (Ext.)	clock frequency with external feedback, [1 / (t_S + t_{CO})]	—	150	—	139	—	111	MHz

1. Timing numbers are based on default LVCMOS 1.8 I/O buffers. Use timing adjusters provided to calculate other standards.
2. Measured using standard switching GRP loading of 1 and 1 output switching.
3. Pulse widths and clock widths less than minimum will cause unknown behavior.
4. Standard 16-bit counter using GRP feedback.

Timing v.2.2

Downloaded from Elcodis.com electronic components distributor

Timing Model

The task of determining the timing through the ispMACH 4000 family, like any CPLD, is relatively simple. The timing model provided in Figure 11 shows the specific delay paths. Once the implementation of a given function is determined either conceptually or from the software report file, the delay path of the function can easily be determined from the timing model. The Lattice design tools report the timing delays based on the same timing model for a particular design. Note that the internal timing parameters are given for reference only, and are not tested. The external timing parameters are tested and guaranteed for every device. For more information on the timing model and usage, refer to TN1004, ispMACH 4000 Timing Model Design and Usage Guidelines.

Figure 11. ispMACH 4000 Timing Model

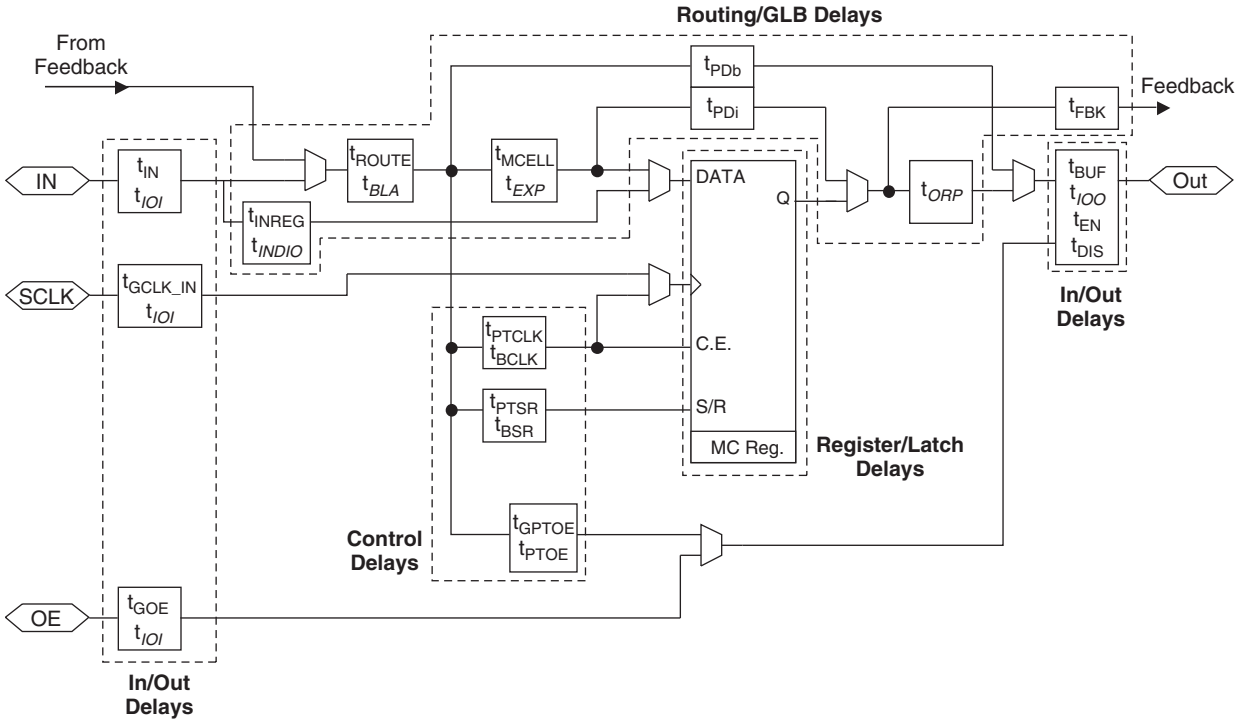

Note: Italicized items are optional delay adders.

Downloaded from Elcodis.com electronic components distributor

ispMACH 4000V/B/C Internal Timing Parameters

Over Recommended Operating Conditions

Parameter	Description	-2.5		-2.7		-3		-3.5		Units
In/Out Delays										
t_{IN}	Input Buffer Delay	—	0.60	—	0.60	—	0.70	—	0.70	ns
t_{GOE}	Global OE Pin Delay	—	2.04	—	2.54	—	3.04	—	3.54	ns
t_{GCLK_IN}	Global Clock Input Buffer Delay	—	0.78	—	1.28	—	1.28	—	1.28	ns
t_{BUF}	Delay through Output Buffer	—	0.85	—	0.85	—	0.85	—	0.85	ns
t_{EN}	Output Enable Time	—	0.96	—	0.96	—	0.96	—	0.96	ns
t_{DIS}	Output Disable Time	—	0.96	—	0.96	—	0.96	—	0.96	ns
Routing/GLB Delays										
t_{ROUTE}	Delay through GRP	—	0.61	—	0.81	—	1.01	—	1.01	ns
t_{MCELL}	Macrocell Delay	—	0.45	—	0.55	—	0.55	—	0.65	ns
t_{INREG}	Input Buffer to Macrocell Register Delay	—	0.11	—	0.31	—	0.31	—	0.31	ns
t_{FBK}	Internal Feedback Delay	—	0.00	—	0.00	—	0.00	—	0.00	ns
t_{PDb}	5-PT Bypass Propagation Delay	—	0.44	—	0.44	—	0.44	—	0.94	ns
t_{PDi}	Macrocell Propagation Delay	—	0.64	—	0.64	—	0.64	—	0.94	ns
Register/Latch Delays										
t_S	D-Register Setup Time (Global Clock)	0.92	—	1.12	—	1.02	—	0.92	—	ns
t_{S_PT}	D-Register Setup Time (Product Term Clock)	1.42	—	1.32	—	1.32	—	1.32	—	ns
t_{ST}	T-Register Setup Time (Global Clock)	1.12	—	1.32	—	1.22	—	1.12	—	ns
t_{ST_PT}	T-Register Setup Time (Product Term Clock)	1.42	—	1.32	—	1.32	—	1.32	—	ns
t_H	D-Register Hold Time	0.88	—	0.68	—	0.98	—	1.08	—	ns
t_{HT}	T-Register Hold Time	0.88	—	0.68	—	0.98	—	1.08	—	ns
t_{SIR}	D-Input Register Setup Time (Global Clock)	0.82	—	1.37	—	1.27	—	1.27	—	ns
t_{SIR_PT}	D-Input Register Setup Time (Product Term Clock)	1.45	—	1.45	—	1.45	—	1.45	—	ns
t_{HIR}	D-Input Register Hold Time (Global Clock)	0.88	—	0.63	—	0.73	—	0.73	—	ns
t_{HIR_PT}	D-Input Register Hold Time (Product Term Clock)	0.88	—	0.63	—	0.73	—	0.73	—	ns
t_{COi}	Register Clock to Output/Feedback MUX Time	—	0.52	—	0.52	—	0.52	—	0.52	ns
t_{CES}	Clock Enable Setup Time	2.25	—	2.25	—	2.25	—	2.25	—	ns
t_{CEH}	Clock Enable Hold Time	1.88	—	1.88	—	1.88	—	1.88	—	ns
t_{SL}	Latch Setup Time (Global Clock)	0.92	—	1.12	—	1.02	—	0.92	—	ns
t_{SL_PT}	Latch Setup Time (Product Term Clock)	1.42	—	1.32	—	1.32	—	1.32	—	ns
t_{HL}	Latch Hold Time	1.17	—	1.17	—	1.17	—	1.17	—	ns
t_{GOi}	Latch Gate to Output/Feedback MUX Time	—	0.33	—	0.33	—	0.33	—	0.33	ns

Downloaded from Elcodis.com electronic components distributor

ispMACH 4000V/B/C Internal Timing Parameters (Cont.)

Over Recommended Operating Conditions

Parameter	Description	-2.5		-2.7		-3		-3.5		Units
t_{PDLi}	Propagation Delay through Transparent Latch to Output/ Feedback MUX	—	0.25	—	0.25	—	0.25	—	0.25	ns
t_{SRi}	Asynchronous Reset or Set to Output/Feedback MUX Delay	0.28	—	0.28	—	0.28	—	0.28	—	ns
t_{SRR}	Asynchronous Reset or Set Recovery Time	1.67	—	1.67	—	1.67	—	1.67	—	ns
Control Delays										
t_{BCLK}	GLB PT Clock Delay	—	1.12	—	1.12	—	1.12	—	1.12	ns
t_{PTCLK}	Macrocell PT Clock Delay	—	0.87	—	0.87	—	0.87	—	0.87	ns
t_{BSR}	Block PT Set/Reset Delay	—	1.83	—	1.83	—	1.83	—	1.83	ns
t_{PTSR}	Macrocell PT Set/Reset Delay	—	1.11	—	1.41	—	1.51	—	1.61	ns
t_{GPTOE}	Global PT OE Delay	—	2.83	—	4.13	—	5.33	—	5.33	ns
t_{PTOE}	Macrocell PT OE Delay	—	1.83	—	2.13	—	2.33	—	2.83	ns

Timing v.3.2

Note: Internal Timing Parameters are not tested and are for reference only. Refer to the Timing Model in this data sheet for further details.

Downloaded from Elcodis.com electronic components distributor

ispMACH 4000V/B/C Internal Timing Parameters

Over Recommended Operating Conditions

Parameter	Description	-5		-75		-10		Units
		Min.	Max.	Min.	Max.	Min.	Max.	
In/Out Delays								
t_{IN}	Input Buffer Delay	—	0.95	—	1.50	—	2.00	ns
t_{GOE}	Global OE Pin Delay	—	4.04	—	6.04	—	7.04	ns
t_{GCLK_IN}	Global Clock Input Buffer Delay	—	1.83	—	2.28	—	3.28	ns
t_{BUF}	Delay through Output Buffer	—	1.00	—	1.50	—	1.50	ns
t_{EN}	Output Enable Time	—	0.96	—	0.96	—	0.96	ns
t_{DIS}	Output Disable Time	—	0.96	—	0.96	—	0.96	ns
Routing/GLB Delays								
t_{ROUTE}	Delay through GRP	—	1.51	—	2.26	—	3.26	ns
t_{MCELL}	Macrocell Delay	—	1.05	—	1.45	—	1.95	ns
t_{INREG}	Input Buffer to Macrocell Register Delay	—	0.56	—	0.96	—	1.46	ns
t_{FBK}	Internal Feedback Delay	—	0.00	—	0.00	—	0.00	ns
t_{PDb}	5-PT Bypass Propagation Delay	—	1.54	—	2.24	—	3.24	ns
t_{PDi}	Macrocell Propagation Delay	—	0.94	—	1.24	—	1.74	ns
Register/Latch Delays								
t_S	D-Register Setup Time (Global Clock)	1.32	—	1.57	—	1.57	—	ns
t_{S_PT}	D-Register Setup Time (Product Term Clock)	1.32	—	1.32	—	1.32	—	ns
t_{ST}	T-Register Setup Time (Global Clock)	1.52	—	1.77	—	1.77	—	ns
t_{ST_PT}	T-Register Setup Time (Product Term Clock)	1.32	—	1.32	—	1.32	—	ns
t_H	D-Register Hold Time	1.68	—	2.93	—	3.93	—	ns
t_{HT}	T-Register Hold Time	1.68	—	2.93	—	3.93	—	ns
t_{SIR}	D-Input Register Setup Time (Global Clock)	1.52	—	1.57	—	1.57	—	ns
t_{SIR_PT}	D-Input Register Setup Time (Product Term Clock)	1.45	—	1.45	—	1.45	—	ns
t_{HIR}	D-Input Register Hold Time (Global Clock)	0.68	—	1.18	—	1.18	—	ns
t_{HIR_PT}	D-Input Register Hold Time (Product Term Clock)	0.68	—	1.18	—	1.18	—	ns
t_{COi}	Register Clock to Output/Feedback MUX Time	—	0.52	—	0.67	—	1.17	ns
t_{CES}	Clock Enable Setup Time	2.25	—	2.25	—	2.25	—	ns
t_{CEH}	Clock Enable Hold Time	1.88	—	1.88	—	1.88	—	ns
t_{SL}	Latch Setup Time (Global Clock)	1.32	—	1.57	—	1.57	—	ns
t_{SL_PT}	Latch Setup Time (Product Term Clock)	1.32	—	1.32	—	1.32	—	ns
t_{HL}	Latch Hold Time	1.17	—	1.17	—	1.17	—	ns
t_{GOi}	Latch Gate to Output/Feedback MUX Time	—	0.33	—	0.33	—	0.33	ns
t_{PDLi}	Propagation Delay through Transparent Latch to Output/ Feedback MUX	—	0.25	—	0.25	—	0.25	ns
t_{SRi}	Asynchronous Reset or Set to Output/Feedback MUX Delay	0.28	—	0.28	—	0.28	—	ns
t_{SRR}	Asynchronous Reset or Set Recovery Time	1.67	—	1.67	—	1.67	—	ns
Control Delays								
t_{BCLK}	GLB PT Clock Delay	—	1.12	—	1.12	—	0.62	ns
t_{PTCLK}	Macrocell PT Clock Delay	—	0.87	—	0.87	—	0.87	ns
t_{BSR}	GLB PT Set/Reset Delay	—	1.83	—	1.83	—	1.83	ns
t_{PTSR}	Macrocell PT Set/Reset Delay	—	2.51	—	3.41	—	3.41	ns

Downloaded from Elcodis.com electronic components distributor

ispMACH 4000V/B/C Internal Timing Parameters (Cont.)

Over Recommended Operating Conditions

Parameter	Description	-5		-75		-10		Units
		Min.	Max.	Min.	Max.	Min.	Max.	
t_{GPTOE}	Global PT OE Delay	—	5.58	—	5.58	—	5.78	ns
t_{PTOE}	Macrocell PT OE Delay	—	3.58	—	4.28	—	4.28	ns

Timing v.3.2

Note: Internal Timing Parameters are not tested and are for reference only. Refer to the Timing Model in this data sheet for further details.

Downloaded from Elcodis.com electronic components distributor

ispMACH 4000Z Internal Timing Parameters

Over Recommended Operating Conditions

Parameter	Description	-35		-37		-42		Units
		Min.	Max.	Min.	Max.	Min.	Max.	
In/Out Delays								
t_{IN}	Input Buffer Delay	—	0.75	—	0.80	—	0.75	ns
t_{GOE}	Global OE Pin Delay	—	2.25	—	2.25	—	2.30	ns
t_{GCLK_IN}	Global Clock Input Buffer Delay	—	1.60	—	1.60	—	1.95	ns
t_{BUF}	Delay through Output Buffer	—	0.75	—	0.90	—	0.90	ns
t_{EN}	Output Enable Time	—	2.25	—	2.25	—	2.50	ns
t_{DIS}	Output Disable Time	—	1.35	—	1.35	—	2.50	ns
Routing/GLB Delays								
t_{ROUTE}	Delay through GRP	—	1.60	—	1.60	—	2.15	ns
t_{MCELL}	Macrocell Delay	—	0.65	—	0.75	—	0.85	ns
t_{INREG}	Input Buffer to Macrocell Register Delay	—	0.91	—	1.00	—	1.00	ns
t_{FBK}	Internal Feedback Delay	—	0.05	—	0.00	—	0.00	ns
t_{PDb}	5-PT Bypass Propagation Delay	—	0.40	—	0.40	—	0.40	ns
t_{PDi}	Macrocell Propagation Delay	—	0.25	—	0.25	—	0.65	ns
Register/Latch Delays								
t_S	D-Register Setup Time (Global Clock)	0.80	—	0.95	—	0.90	—	ns
t_{S_PT}	D-Register Setup Time (Product Term Clock)	1.35	—	1.95	—	1.90	—	ns
t_{ST}	T-Register Setup Time (Global Clock)	1.00	—	1.15	—	1.10	—	ns
t_{ST_PT}	T-register Setup Time (Product Term Clock)	1.55	—	1.75	—	2.10	—	ns
t_H	D-Register Hold Time	1.40	—	1.55	—	1.80	—	ns
t_{HT}	T-Resister Hold Time	1.40	—	1.55	—	1.80	—	ns
t_{SIR}	D-Input Register Setup Time (Global Clock)	0.94	—	0.90	—	1.50	—	ns
t_{SIR_PT}	D-Input Register Setup Time (Product Term Clock)	1.45	—	1.45	—	1.45	—	ns
t_{HIR}	D-Input Register Hold Time (Global Clock)	1.06	—	1.20	—	1.10	—	ns
t_{HIR_PT}	D-Input Register Hold Time (Product Term Clock)	0.88	—	1.00	—	1.00	—	ns
t_{COi}	Register Clock to Output/Feedback MUX Time	—	0.65	—	0.70	—	0.65	ns
t_{CES}	Clock Enable Setup Time	1.00	—	2.00	—	2.00	—	ns
t_{CEH}	Clock Enable Hold Time	0.00	—	0.00	—	0.00	—	ns
t_{SL}	Latch Setup Time (Global Clock)	0.80	—	0.95	—	0.90	—	ns
t_{SL_PT}	Latch Setup Time (Product Term Clock)	1.55	—	1.95	—	1.90	—	ns
t_{HL}	Latch Hold Time	1.40	—	1.80	—	1.80	—	ns
t_{GOi}	Latch Gate to Output/Feedback MUX Time	—	0.40	—	0.33	—	0.33	ns
t_{PDLi}	Propagation Delay through Transparent Latch to Output/ Feedback MUX	—	0.30	—	0.25	—	0.25	ns
t_{SRi}	Asynchronous Reset or Set to Output/Feedback MUX Delay	—	0.28	—	0.28	—	1.27	ns
t_{SRR}	Asynchronous Reset or Set Recovery Delay	—	2.00	—	1.67	—	1.80	ns
Control Delays								
t_{BCLK}	GLB PT Clock Delay	—	1.30	—	1.50	—	1.55	ns
t_{PTCLK}	Macrocell PT Clock Delay	—	1.50	—	1.70	—	1.55	ns
t_{BSR}	GLB PT Set/Reset Delay	—	1.10	—	1.83	—	1.83	ns
t_{PTSR}	Macrocell PT Set/Reset Delay	—	1.22	—	2.02	—	1.83	ns

Downloaded from Elcodis.com electronic components distributor

ispMACH 4000Z Internal Timing Parameters (Cont.)

Over Recommended Operating Conditions

Parameter	Description	-35		-37		-42		Units
		Min.	Max.	Min.	Max.	Min.	Max.	
t_{GPTOE}	Global PT OE Delay	—	1.9	—	2.35	—	2.60	ns
t_{PTOE}	Macrocell PT OE Delay	—	2.4	—	3.35	—	2.60	ns

Note: Internal Timing Parameters are not tested and are for reference only. Refer to the timing model in this data sheet for further details.

Timing v.2.2

Downloaded from Elcodis.com electronic components distributor

ispMACH 4000Z Internal Timing Parameters (Cont.)

Over Recommended Operating Conditions

Parameter	Description	-45		-5		-75		Units
		Min.	Max.	Min.	Max.	Min.	Max.	
In/Out Delays								
t_{IN}	Input Buffer Delay	—	0.95	—	1.25	—	1.80	ns
t_{GOE}	Global OE Pin Delay	—	3.00	—	3.50	—	4.30	ns
t_{GCLK_IN}	Global Clock Input Buffer Delay	—	1.95	—	2.05	—	2.15	ns
t_{BUF}	Delay through Output Buffer	—	1.10	—	1.00	—	1.30	ns
t_{EN}	Output Enable Time	—	2.50	—	2.50	—	2.70	ns
t_{DIS}	Output Disable Time	—	2.50	—	2.50	—	2.70	ns
Routing/GLB Delays								
t_{ROUTE}	Delay through GRP	—	2.25	—	2.05	—	2.50	ns
t_{MCELL}	Macrocell Delay	—	0.65	—	0.65	—	1.00	ns
t_{INREG}	Input Buffer to Macrocell Register Delay	—	1.00	—	1.00	—	1.00	ns
t_{FBK}	Internal Feedback Delay	—	0.35	—	0.05	—	0.05	ns
t_{PDb}	5-PT Bypass Propagation Delay	—	0.20	—	0.70	—	1.90	ns
t_{PDi}	Macrocell Propagation Delay	—	0.45	—	0.65	—	1.00	ns
Register/Latch Delays								
t_S	D-Register Setup Time (Global Clock)	1.00	—	1.10	—	1.35	—	ns
t_{S_PT}	D-Register Setup Time (Product Term Clock)	2.10	—	1.90	—	2.45	—	ns
t_{ST}	T-Register Setup Time (Global Clock)	1.20	—	1.30	—	1.55	—	ns
t_{ST_PT}	T-register Setup Time (Product Term Clock)	2.30	—	2.10	—	2.75	—	ns
t_H	D-Register Hold Time	1.90	—	1.90	—	3.15	—	ns
t_{HT}	T-Resister Hold Time	1.90	—	1.90	—	3.15	—	ns
t_{SIR}	D-Input Register Setup Time (Global Clock)	1.30	—	1.10	—	0.75	—	ns
t_{SIR_PT}	D-Input Register Setup Time (Product Term Clock)	1.45	—	1.45	—	1.45	—	ns
t_{HIR}	D-Input Register Hold Time (Global Clock)	1.30	—	1.50	—	1.95	—	ns
t_{HIR_PT}	D-Input Register Hold Time (Product Term Clock)	1.00	—	1.00	—	1.18	—	ns
t_{COi}	Register Clock to Output/Feedback MUX Time	—	0.75	—	1.15	—	1.05	ns
t_{CES}	Clock Enable Setup Time	2.00	—	2.00	—	2.00	—	ns
t_{CEH}	Clock Enable Hold Time	0.00	—	0.00	—	0.00	—	ns
t_{SL}	Latch Setup Time (Global Clock)	1.00	—	1.00	—	1.65	—	ns
t_{SL_PT}	Latch Setup Time (Product Term Clock)	2.10	—	1.90	—	2.15	—	ns
t_{HL}	Latch Hold Time	2.00	—	2.00	—	1.17	—	ns
t_{GOi}	Latch Gate to Output/Feedback MUX Time	—	0.33	—	0.33	—	0.33	ns
t_{PDLi}	Propagation Delay through Transparent Latch to Output/ Feedback MUX	—	0.25	—	0.25	—	0.25	ns
t_{SRi}	Asynchronous Reset or Set to Output/Feedback MUX Delay	—	0.97	—	0.97	—	0.28	ns
t_{SRR}	Asynchronous Reset or Set Recovery Delay	—	1.80	—	1.80	—	1.67	ns
Control Delays								
t_{BCLK}	GLB PT Clock Delay	—	1.55	—	1.55	—	1.25	ns
t_{PTCLK}	Macrocell PT Clock Delay	—	1.55	—	1.55	—	1.25	ns
t_{BSR}	GLB PT Set/Reset Delay	—	1.83	—	1.83	—	1.83	ns
t_{PTSR}	Macrocell PT Set/Reset Delay	—	1.83	—	1.83	—	2.72	ns
t_{GPTOE}	Global PT OE Delay	—	4.30	—	4.20	—	3.50	ns

Downloaded from Elcodis.com electronic components distributor

ispMACH 4000Z Internal Timing Parameters (Cont.)

Over Recommended Operating Conditions

Parameter	Description	-45		-5		-75		Units
		Min.	Max.	Min.	Max.	Min.	Max.	
t_{PTOE}	Macrocell PT OE Delay	—	2.50	—	2.70	—	2.00	ns

Note: Internal Timing Parameters are not tested and are for reference only. Refer to the timing model in this data sheet for further details.

Timing v.2.2

Downloaded from Elcodis.com electronic components distributor

ispMACH 4000V/B/C Timing Adders[1]

Adder Type	Base Parameter	Description	-25		-27		-3		-35		Units
			Min.	Max.	Min.	Max.	Min.	Max.	Min.	Max.	
Optional Delay Adders											
t_{INDIO}	t_{INREG}	Input register delay	—	0.95	—	1.00	—	1.00	—	1.00	ns
t_{EXP}	t_{MCELL}	Product term expander delay	—	0.33	—	0.33	—	0.33	—	0.33	ns
t_{ORP}	—	Output routing pool delay	—	0.05	—	0.05	—	0.05	—	0.05	ns
t_{BLA}	t_{ROUTE}	Additional block loading adder	—	0.03	—	0.05	—	0.05	—	0.05	ns
t_{IOI} Input Adjusters											
LVTTL_in	t_{IN}, t_{GCLK_IN}, t_{GOE}	Using LVTTL standard	—	0.60	—	0.60	—	0.60	—	0.60	ns
LVCMOS33_in	t_{IN}, t_{GCLK_IN}, t_{GOE}	Using LVCMOS 3.3 standard	—	0.60	—	0.60	—	0.60	—	0.60	ns
LVCMOS25_in	t_{IN}, t_{GCLK_IN}, t_{GOE}	Using LVCMOS 2.5 standard	—	0.60	—	0.60	—	0.60	—	0.60	ns
LVCMOS18_in	t_{IN}, t_{GCLK_IN}, t_{GOE}	Using LVCMOS 1.8 standard	—	0.00	—	0.00	—	0.00	—	0.00	ns
PCI_in	t_{IN}, t_{GCLK_IN}, t_{GOE}	Using PCI compatible input	—	0.60	—	0.60	—	0.60	—	0.60	ns
t_{IOO} Output Adjusters											
LVTTL_out	t_{BUF}, t_{EN}, t_{DIS}	Output configured as TTL buffer	—	0.20	—	0.20	—	0.20	—	0.20	ns
LVCMOS33_out	t_{BUF}, t_{EN}, t_{DIS}	Output configured as 3.3V buffer	—	0.20	—	0.20	—	0.20	—	0.20	ns
LVCMOS25_out	t_{BUF}, t_{EN}, t_{DIS}	Output configured as 2.5V buffer	—	0.10	—	0.10	—	0.10	—	0.10	ns
LVCMOS18_out	t_{BUF}, t_{EN}, t_{DIS}	Output configured as 1.8V buffer	—	0.00	—	0.00	—	0.00	—	0.00	ns
PCI_out	t_{BUF}, t_{EN}, t_{DIS}	Output configured as PCI compatible buffer	—	0.20	—	0.20	—	0.20	—	0.20	ns
Slow Slew	t_{BUF}, t_{EN}	Output configured for slow slew rate	—	1.00	—	1.00	—	1.00	—	1.00	ns

Note: Open drain timing is the same as corresponding LVCMOS timing. Timing v.3.2

1. Refer to TN1004, ispMACH 4000 Timing Model Design and Usage Guidelines for information regarding use of these adders.

Downloaded from Elcodis.com electronic components distributor

ispMACH 4000V/B/C Timing Adders[1] (Cont.)

Adder Type	Base Parameter	Description	-5		-75		-10		Units
			Min.	Max.	Min.	Max.	Min.	Max.	
Optional Delay Adders									
t_{INDIO}	t_{INREG}	Input register delay	—	1.00	—	1.00	—	1.00	ns
t_{EXP}	t_{MCELL}	Product term expander delay	—	0.33	—	0.33	—	0.33	ns
t_{ORP}	—	Output routing pool delay	—	0.05	—	0.05	—	0.05	ns
t_{BLA}	t_{ROUTE}	Additional block loading adder	—	0.05	—	0.05	—	0.05	ns
t_{IOI} Input Adjusters									
LVTTL_in	t_{IN}, t_{GCLK_IN}, t_{GOE}	Using LVTTL standard	—	0.60	—	0.60	—	0.60	ns
LVCMOS33_in	t_{IN}, t_{GCLK_IN}, t_{GOE}	Using LVCMOS 3.3 standard	—	0.60	—	0.60	—	0.60	ns
LVCMOS25_in	t_{IN}, t_{GCLK_IN}, t_{GOE}	Using LVCMOS 2.5 standard	—	0.60	—	0.60	—	0.60	ns
LVCMOS18_in	t_{IN}, t_{GCLK_IN}, t_{GOE}	Using LVCMOS 1.8 standard	—	0.00	—	0.00	—	0.00	ns
PCI_in	t_{IN}, t_{GCLK_IN}, t_{GOE}	Using PCI compatible input	—	0.60	—	0.60	—	0.60	ns
t_{IOO} Output Adjusters									
LVTTL_out	t_{BUF}, t_{EN}, t_{DIS}	Output configured as TTL buffer	—	0.20	—	0.20	—	0.20	ns
LVCMOS33_out	t_{BUF}, t_{EN}, t_{DIS}	Output configured as 3.3V buffer	—	0.20	—	0.20	—	0.20	ns
LVCMOS25_out	t_{BUF}, t_{EN}, t_{DIS}	Output configured as 2.5V buffer	—	0.10	—	0.10	—	0.10	ns
LVCMOS18_out	t_{BUF}, t_{EN}, t_{DIS}	Output configured as 1.8V buffer	—	0.00	—	0.00	—	0.00	ns
PCI_out	t_{BUF}, t_{EN}, t_{DIS}	Output configured as PCI compatible buffer	—	0.20	—	0.20	—	0.20	ns
Slow Slew	t_{BUF}, t_{EN}	Output configured for slow slew rate	—	1.00	—	1.00	—	1.00	ns

Note: Open drain timing is the same as corresponding LVCMOS timing. Timing v.3.2

1. Refer to TN1004, ispMACH 4000 Timing Model Design and Usage Guidelines for information regarding use of these adders.

Downloaded from Elcodis.com electronic components distributor

ispMACH 4000Z Timing Adders [1]

Adder Type	Base Parameter	Description	-35		-37		-42		Units
			Min.	Max.	Min.	Max.	Min.	Max.	
Optional Delay Adders									
t_{INDIO}	t_{INREG}	Input register delay	—	1.00	—	1.00	—	1.30	ns
t_{EXP}	t_{MCELL}	Product term expander delay	—	0.40	—	0.40	—	0.45	ns
t_{ORP}	—	Output routing pool delay	—	0.40	—	0.40	—	0.40	ns
t_{BLA}	t_{ROUTE}	Additional block loading adder	—	0.04	—	0.05	—	0.05	ns
t_{IOI} Input Adjusters									
LVTTL_in	t_{IN}, t_{GCLK_IN}, t_{GOE}	Using LVTTL standard	—	0.60	—	0.60	—	0.60	ns
LVCMOS33_in	t_{IN}, t_{GCLK_IN}, t_{GOE}	Using LVCMOS 3.3 standard	—	0.60	—	0.60	—	0.60	ns
LVCMOS25_in	t_{IN}, t_{GCLK_IN}, t_{GOE}	Using LVCMOS 2.5 standard	—	0.60	—	0.60	—	0.60	ns
LVCMOS18_in	t_{IN}, t_{GCLK_IN}, t_{GOE}	Using LVCMOS 1.8 standard	—	0.00	—	0.00	—	0.00	ns
PCI_in	t_{IN}, t_{GCLK_IN}, t_{GOE}	Using PCI compatible input	—	0.60	—	0.60	—	0.60	ns
t_{IOO} Output Adjusters									
LVTTL_out	t_{BUF}, t_{EN}, t_{DIS}	Output configured as TTL buffer	—	0.20	—	0.20	—	0.20	ns
LVCMOS33_out	t_{BUF}, t_{EN}, t_{DIS}	Output configured as 3.3V buffer	—	0.20	—	0.20	—	0.20	ns
LVCMOS25_out	t_{BUF}, t_{EN}, t_{DIS}	Output configured as 2.5V buffer	—	0.10	—	0.10	—	0.10	ns
LVCMOS18_out	t_{BUF}, t_{EN}, t_{DIS}	Output configured as 1.8V buffer	—	0.00	—	0.00	—	0.00	ns
PCI_out	t_{BUF}, t_{EN}, t_{DIS}	Output configured as PCI compatible buffer	—	0.20	—	0.20	—	0.20	ns
Slow Slew	t_{BUF}, t_{EN}	Output configured for slow slew rate	—	1.00	—	1.00	—	1.00	ns

Note: Open drain timing is the same as corresponding LVCMOS timing. Timing v.2.2

1. Refer to TN1004, ispMACH 4000 Timing Model Design and Usage Guidelines for information regarding the use of these adders.

Downloaded from Elcodis.com electronic components distributor

ispMACH 4000Z Timing Adders (Cont.)[1]

Adder Type	Base Parameter	Description	-45		-5		-75		Units
			Min.	Max.	Min.	Max.	Min.	Max.	
Optional Delay Adders									
t_{INDIO}	t_{INREG}	Input register delay	—	1.30	—	1.30	—	1.30	ns
t_{EXP}	t_{MCELL}	Product term expander delay	—	0.45	—	0.45	—	0.50	ns
t_{ORP}	—	Output routing pool delay	—	0.40	—	0.40	—	0.40	ns
t_{BLA}	t_{ROUTE}	Additional block loading adder	—	0.05	—	0.05	—	0.05	ns
t_{IOI} Input Adjusters									
LVTTL_in	t_{IN}, t_{GCLK_IN}, t_{GOE}	Using LVTTL standard	—	0.60	—	0.60	—	0.60	ns
LVCMOS33_in	t_{IN}, t_{GCLK_IN}, t_{GOE}	Using LVCMOS 3.3 standard	—	0.60	—	0.60	—	0.60	ns
LVCMOS25_in	t_{IN}, t_{GCLK_IN}, t_{GOE}	Using LVCMOS 2.5 standard	—	0.60	—	0.60	—	0.60	ns
LVCMOS18_in	t_{IN}, t_{GCLK_IN}, t_{GOE}	Using LVCMOS 1.8 standard	—	0.00	—	0.00	—	0.00	ns
PCI_in	t_{IN}, t_{GCLK_IN}, t_{GOE}	Using PCI compatible input	—	0.60	—	0.60	—	0.60	ns
t_{IOO} Output Adjusters									
LVTTL_out	t_{BUF}, t_{EN}, t_{DIS}	Output configured as TTL buffer	—	0.20	—	0.20	—	0.20	ns
LVCMOS33_out	t_{BUF}, t_{EN}, t_{DIS}	Output configured as 3.3V buffer	—	0.20	—	0.20	—	0.20	ns
LVCMOS25_out	t_{BUF}, t_{EN}, t_{DIS}	Output configured as 2.5V buffer	—	0.10	—	0.10	—	0.10	ns
LVCMOS18_out	t_{BUF}, t_{EN}, t_{DIS}	Output configured as 1.8V buffer	—	0.00	—	0.00	—	0.00	ns
PCI_out	t_{BUF}, t_{EN}, t_{DIS}	Output configured as PCI compatible buffer	—	0.20	—	0.20	—	0.20	ns
Slow Slew	t_{BUF}, t_{EN}	Output configured for slow slew rate	—	1.00	—	1.00	—	1.00	ns

Note: Open drain timing is the same as corresponding LVCMOS timing. Timing v.2.2

1. Refer to TN1004, ispMACH 4000 Timing Model Design and Usage Guidelines for information regarding use of these adders.

Downloaded from Elcodis.com electronic components distributor

Boundary Scan Waveforms and Timing Specifications

Symbol	Parameter	Min.	Max.	Units
t_{BTCP}	TCK [BSCAN test] clock cycle	40	—	ns
t_{BTCH}	TCK [BSCAN test] pulse width high	20	—	ns
t_{BTCL}	TCK [BSCAN test] pulse width low	20	—	ns
t_{BTSU}	TCK [BSCAN test] setup time	8	—	ns
t_{BTH}	TCK [BSCAN test] hold time	10	—	ns
t_{BRF}	TCK [BSCAN test] rise and fall time	50	—	mV/ns
t_{BTCO}	TAP controller falling edge of clock to valid output	—	10	ns
t_{BTOZ}	TAP controller falling edge of clock to data output disable	—	10	ns
t_{BTVO}	TAP controller falling edge of clock to data output enable	—	10	ns
t_{BTCPSU}	BSCAN test Capture register setup time	8	—	ns
t_{BTCPH}	BSCAN test Capture register hold time	10	—	ns
t_{BTUCO}	BSCAN test Update reg, falling edge of clock to valid output	—	25	ns
t_{BTUOZ}	BSCAN test Update reg, falling edge of clock to output disable	—	25	ns
t_{BTUOV}	BSCAN test Update reg, falling edge of clock to output enable	—	25	ns

Downloaded from Elcodis.com electronic components distributor

Power Consumption

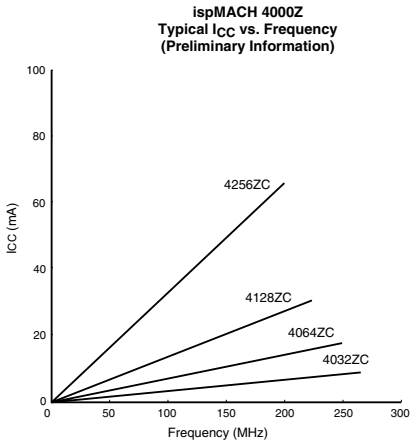

Note: The devices are configured with maximum number of 16-bit counters, typical current at 1.8V, 25°C.

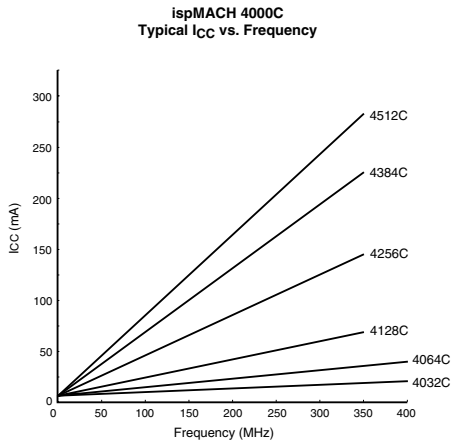

Note: The devices are configured with maximum number of 16-bit counters, typical current at 1.8V, 25°C.

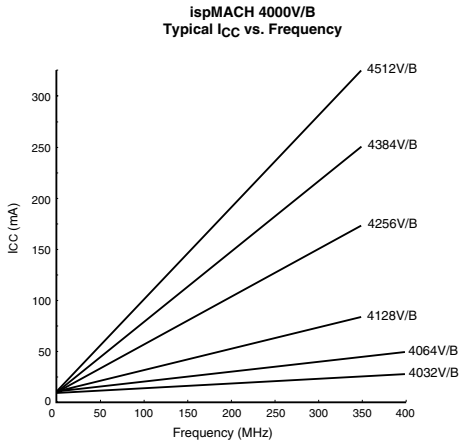

Note: The devices are configured with maximum number of 16-bit counters, typical current at 3.3V, 2.5V, 25°C.

Power Estimation Coefficients[1]

Device	A	B
ispMACH 4032V/B	11.3	0.010
ispMACH 4032C	1.3	0.010
ispMACH 4064V/B	11.5	0.010
ispMACH 4064C	1.5	0.010
ispMACH 4128V/B	11.5	0.011
ispMACH 4128C	1.5	0.011
ispMACH 4256V/B	12	0.011
ispMACH 4256C	2	0.011
ispMACH 4384V/B	12.5	0.013
ispMACH 4384C	2.5	0.013
ispMACH 4512V/B	13	0.013
ispMACH 4512C	3	0.013
ispMACH 4032ZC	0.010	0.010
ispMACH 4064ZC	0.011	0.010
ispMACH 4128ZC	0.012	0.010
ispMACH 4256ZC	0.013	0.010

1. For further information about the use of these coefficients, refer to TN1005, Power Estimation in ispMACH 4000V/B/C/Z Devices.

Downloaded from Elcodis.com electronic components distributor

Switching Test Conditions

Figure 12 shows the output test load that is used for AC testing. The specific values for resistance, capacitance, voltage, and other test conditions are shown in Table 11.

Figure 12. Output Test Load, LVTTL and LVCMOS Standards

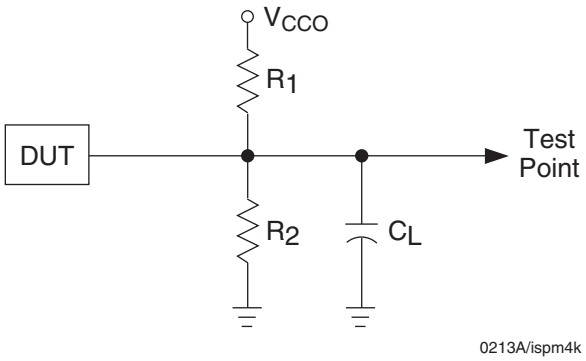

Table 11. Test Fixture Required Components

Test Condition	R_1	R_2	C_L[1]	Timing Ref.	V_{CCO}
LVCMOS I/O, (L -> H, H -> L)	106Ω	106Ω	35pF	LVCMOS 3.3 = 1.5V	LVCMOS 3.3 = 3.0V
				LVCMOS 2.5 = V_{CCO}/2	LVCMOS 2.5 = 2.3V
				LVCMOS 1.8 = V_{CCO}/2	LVCMOS 1.8 = 1.65V
LVCMOS I/O (Z -> H)	∞	106Ω	35pF	1.5V	3.0V
LVCMOS I/O (Z -> L)	106Ω	∞	35pF	1.5V	3.0V
LVCMOS I/O (H -> Z)	∞	106Ω	5pF	V_{OH} - 0.3	3.0V
LVCMOS I/O (L -> Z)	106Ω	∞	5pF	V_{OL} + 0.3	3.0V

1. C_L includes test fixtures and probe capacitance.

Downloaded from Elcodis.com electronic components distributor

Signal Descriptions

Signal Names	Description	
TMS	Input – This pin is the IEEE 1149.1 Test Mode Select input, which is used to control the state machine.	
TCK	Input – This pin is the IEEE 1149.1 Test Clock input pin, used to clock through the state machine.	
TDI	Input – This pin is the IEEE 1149.1 Test Data In pin, used to load data.	
TDO	Output – This pin is the IEEE 1149.1 Test Data Out pin used to shift data out.	
GOE0/IO, GOE1/IO	These pins are configured to be either Global Output Enable Input or as general I/O pins.	
GND	Ground	
NC	Not Connected	
V_{CC}	The power supply pins for logic core and JTAG port.	
CLK0/I, CLK1/I, CLK2/I, CLK3/I	These pins are configured to be either CLK input or as an input.	
V_{CCO0}, V_{CCO1}	The power supply pins for each I/O bank.	
yzz	Input/Output[1] – These are the general purpose I/O used by the logic array. y is GLB reference (alpha) and z is macrocell reference (numeric). z: 0-15.	
	ispMACH 4032	y: A-B
	ispMACH 4064	y: A-D
	ispMACH 4128	y: A-H
	ispMACH 4256	y: A-P
	ispMACH 4384	y: A-P, AX-HX
	ispMACH 4512	y: A-P, AX-PX

1. In some packages, certain I/Os are only available for use as inputs. See the signal connections table for details.

ispMACH 4000V/B/C ORP Reference Table

	4032V/B/C		4064V/B/C			4128V/B/C			4256V/B/C				4384V/B/C		4512V/B/C	
Number of I/Os	30[1]	32	30[2]	32	64	64	92[3]	96	64	96[4]	128	160	128	192	128	208
Number of GLBs	2	2	4	4	4	8	8	8	16	16	16	16	16	16	16	16
Number of I/Os / GLB	16	16	8	8	16	8	12	12	4	8	8	10	8	8	8	Mixture of 8 & 4[5]
Reference ORP Table	16 I/Os / GLB		8 I/Os / GLB		16 I/Os / GLB	8 I/Os / GLB	12 I/Os / GLB		4 I/Os / GLB	8 I/Os / GLB	8 I/Os / GLB	10 I/Os / GLB	8 I/Os / GLB		8 I/Os / GLB	8 I/Os / GLB 4 I/Os / GLB

1. 32-macrocell device, 44 TQFP: 2 GLBs have 15 out of 16 I/Os bonded out.
2. 64-macrocells device, 44 TQFP: 2 GLBs have 7 out of 8 I/Os bonded out.
3. 128-macrocell device, 128 TQFP: 4 GLBs have 11 out of 12 I/Os
4. 256-macrocell device, 144 TQFP: 16 GLBs have 6 I/Os per
5. 512-macrocell device: 20 GLBs have 8 I/Os per, 12 GLBs have 4 I/Os per

ispMACH 4000Z ORP Reference Table

	4032Z	4064Z		4128Z		4256Z		
Number of I/Os	32	32	64	64	96	64	96[1]	128
Number of GLBs	2	4	4	8	8	16	16	16
Number of I/Os / GLB	16	8	16	8	12	4	8	8
Reference ORP Table	16 I/Os / GLB	8 I/Os / GLB	16 I/Os / GLB	8 I/Os / GLB	12 I/Os / GLB	4 I/Os / GLB	8 I/Os / GLB	8 I/Os / GLB

1. 256-macrocell device, 132 csBGA: 16 GLBs have 6 I/Os per

Downloaded from Elcodis.com electronic components distributor

ispMACH 4000V/B/C/Z Power Supply and NC Connections[1]

Signal	44-pin TQFP[2]	48-pin TQFP[2]	56-ball csBGA[3]	100-pin TQFP[2]	128-pin TQFP[2]
VCC	11, 33	12, 36	K2, A9	25, 40, 75, 90	32, 51, 96, 115
VCCO0 VCCO (Bank 0)	6	6	F3	13, 33, 95	3, 17, 30, 41, 122
VCCO1 VCCO (Bank 1)	28	30	E8	45, 63, 83	58, 67, 81, 94, 105
GND	12, 34	13, 37	H3, C8	1, 26, 51, 76	1, 33, 65, 97
GND (Bank 0)	5	5	D3	7, 18, 32, 96	10, 24, 40, 113, 123
GND (Bank 1)	27	29	G8	46, 57, 68, 82	49, 59, 74, 88, 104
NC	—	—	**4032Z**: A8, B10, E1, E3, F8, F10, J1, K3	—	—

1. All grounds must be electrically connected at the board level. However, for the purposes of I/O current loading, grounds are associated with the bank shown.
2. Pin orientation follows the conventional order from pin 1 marking of the top side view and counter-clockwise.
3. Pin orientation A1 starts from the upper left corner of the top side view with alphabetical order ascending vertically and numerical order ascending horizontally.

Downloaded from Elcodis.com electronic components distributor

ispMACH 4000V/B/C/Z Power Supply and NC Connections[1] (Cont.)

Signal	132-ball csBGA[7]	144-pin TQFP[4]	176-pin TQFP[4]	256-ball ftBGA/fpBGA[2, 3, 7, 9]
VCC	P1, A14, B7, N8	36, 57, 108, 129	42, 69, 88, 130, 157, 176	B2, B15, G8, G9, K8, K9, R2, R15
VCCO0 VCCO (Bank 0)	G3, P5, C1[8], M2[8], C5	3, 19, 34, 47, 136	4, 22, 40, 56, 166	D6, F4, H7, J7, L4, N6
VCCO1 VCCO (Bank 1)	M10, M14[8], H12, A10, C13[8]	64, 75, 91, 106, 119	78, 92, 110, 128, 144	D11, F13, H10, J10, L13, N11
GND	B1, P2, N14, A13	1, 37, 73, 109	2, 46[5], 65, 90, 134, 153	A1, A16, C6, C11, F3, F14, G7, G10, H8, H9, J8, J9, K7, K10, L3, L14, P6, P11, T1, T16
GND (Bank 0)	E2, K2, N4, B4	10, 18[6], 27, 46, 127, 137	13, 31, 55, 155, 167	
GND (Bank 1)	N11, K13, E13, B11	55, 65, 82, 90[6], 99, 118	67, 79, 101, 119, 143	
NC	**4064Z:** C1, C3, E1, E3, H2, J3, K1, M2, M4, N5, P7, P8, M8, P10, P11, P14, M12, K14, K12, G13, G14, E14, C13, B13, B10, C10, A7, B5, A5, A4, A1 **4128Z:** P8, A7	**4128V**: 17, 20, 38, 45, 72, 89, 92, 110, 117, 144 **4256V**: 18, 90	1, 43, 44, 45, 89, 131, 132, 133	**4256V/B/C, 128 I/O:** A4, A5, A6, A11, A12, A13, A15, B5, B6, B11, B12, B14, C7, D1, D4, D5, D10, D12, D16, E1, E2, E4, E5, E7, E10, E13, E14, E15, E16, F1, F2, F15, F16, G1, G4, G5, G6, G12, G13, G14, J11, K3, K4, K15, L1, L2, L12, L15, L16, M1, M2, M3, M4, M5, M12, M13, M15, M16, N1, N2, N7, N10, N12, N14, P5, P12, R4, R5, R6, R11, R12, R16, T2, T4, T5, T6, T11, T12, T13, T15 **4256V/B/C, 160 I/O:** A5, A12, A15, B5, B6, B11, B12, B14, D4, D5, D12, E1, E4, E5, E13, E15, E16, F1, F2, F15, G1, G5, G12, G14, L1, L2, L12, L15, L16, M1, M2, M3, M12, M16, N1, N12, N14, P5, R4, R5, R6, R11, R12, R16, T4, T5, T12, T15 **4384V/B/C:** B5, B12, D5, D12, E1, E15, E16, F2, L12, M1, M2, M16, N12, R5, R12, T4 **4512V/B/C:** None

1. All grounds must be electrically connected at the board level. However, for the purposes of I/O current loading, grounds are associated with the bank shown.
2. Internal GNDs and I/O GNDs (Bank 0/1) are connected inside package.
3. V_{CCO} balls connect to two power planes within the package, one for V_{CCO0} and one for V_{CCO1}.
4. Pin orientation follows the conventional order from pin 1 marking of the top side view and counter-clockwise.
5. ispMACH 4384V/B/C pin 46 is tied to GND (Bank 0).
6. ispMACH 4128V only.
7. Pin orientation A1 starts from the upper left corner of the top side view with alphabetical order ascending vertically and numerical order ascending horizontally.
8. ispMACH 4128Z and 4256Z only. NC for ispMACH 4064Z.
9. Use 256 ftBGA package for all new designs. Refer to PCN#14A-07 for 256 fpBGA package discontinuance.

Downloaded from Elcodis.com electronic components distributor

ispMACH 4032V/B/C and 4064V/B/C Logic Signal Connections: 44-Pin TQFP

Pin Number	Bank Number	ispMACH 4032V/B/C		ispMACH 4064V/B/C	
		GLB/MC/Pad	ORP	GLB/MC/Pad	ORP
1	-	TDI	-	TDI	-
2	0	A5	A^5	A10	A^5
3	0	A6	A^6	A12	A^6
4	0	A7	A^7	A14	A^7
5	0	GND (Bank 0)	-	GND (Bank 0)	-
6	0	VCCO (Bank 0)	-	VCCO (Bank 0)	-
7	0	A8	A^8	B0	B^0
8	0	A9	A^9	B2	B^1
9	0	A10	A^10	B4	B^2
10	-	TCK	-	TCK	-
11	-	VCC	-	VCC	-
12	-	GND	-	GND	-
13	0	A12	A^12	B8	B^4
14	0	A13	A^13	B10	B^5
15	0	A14	A^14	B12	B^6
16	0	A15	A^15	B14	B^7
17	1	CLK2/I	-	CLK2/I	-
18	1	B0	B^0	C0	C^0
19	1	B1	B^1	C2	C^1
20	1	B2	B^2	C4	C^2
21	1	B3	B^3	C6	C^3
22	1	B4	B^4	C8	C^4
23	-	TMS	-	TMS	-
24	1	B5	B^5	C10	C^5
25	1	B6	B^6	C12	C^6
26	1	B7	B^7	C14	C^7
27	1	GND (Bank 1)	-	GND (Bank 1)	-
28	1	VCCO (Bank 1)	-	VCCO (Bank 1)	-
29	1	B8	B^8	D0	D^0
30	1	B9	B^9	D2	D^1
31	1	B10	B^10	D4	D^2
32	-	TDO	-	TDO	-
33	-	VCC	-	VCC	-
34	-	GND	-	GND	-
35	1	B12	B^12	D8	D^4
36	1	B13	B^13	D10	D^5
37	1	B14	B^14	D12	D^6
38	1	B15/GOE1	B^15	D14/GOE1	D^7
39	0	CLK0/I	-	CLK0/I	-
40	0	A0/GOE0	A^0	A0/GOE0	A^0
41	0	A1	A^1	A2	A^1

Downloaded from Elcodis.com electronic components distributor

ispMACH 4032V/B/C and 4064V/B/C Logic Signal Connections: 44-Pin TQFP (Cont.)

Pin Number	Bank Number	ispMACH 4032V/B/C		ispMACH 4064V/B/C	
		GLB/MC/Pad	ORP	GLB/MC/Pad	ORP
42	0	A2	A^2	A4	A^2
43	0	A3	A^3	A6	A^3
44	0	A4	A^4	A8	A^4

ispMACH 4032V/B/C/Z and 4064V/B/C/Z Logic Signal Connections: 48-Pin TQFP

Pin Number	Bank Number	ispMACH 4032V/B/C/Z		ispMACH 4064V/B/C		ispMACH 4064Z	
		GLB/MC/Pad	ORP	GLB/MC/Pad	ORP	GLB/MC/Pad	ORP
1	-	TDI	-	TDI	-	TDI	-
2	0	A5	A^5	A10	A^5	A8	A^5
3	0	A6	A^6	A12	A^6	A10	A^6
4	0	A7	A^7	A14	A^7	A11	A^7
5	0	GND (Bank 0)	-	GND (Bank 0)	-	GND (Bank 0)	-
6	0	VCCO (Bank 0)	-	VCCO (Bank 0)	-	VCCO (Bank 0)	-
7	0	A8	A^8	B0	B^0	B15	B^7
8	0	A9	A^9	B2	B^1	B12	B^6
9	0	A10	A^10	B4	B^2	B10	B^5
10	0	A11	A^11	B6	B^3	B8	B^4
11	-	TCK	-	TCK	-	TCK	-
12	-	VCC	-	VCC	-	VCC	-
13	-	GND	-	GND	-	GND	-
14	0	A12	A^12	B8	B^4	B6	B^3
15	0	A13	A^13	B10	B^5	B4	B^2
16	0	A14	A^14	B12	B^6	B2	B^1
17	0	A15	A^15	B14	B^7	B0	B^0
18	0	CLK1/I	-	CLK1/I	-	CLK1/I	-
19	1	CLK2/I	-	CLK2/I	-	CLK2/I	-
20	1	B0	B^0	C0	C^0	C0	C^0
21	1	B1	B^1	C2	C^1	C1	C^1
22	1	B2	B^2	C4	C^2	C2	C^2
23	1	B3	B^3	C6	C^3	C4	C^3
24	1	B4	B^4	C8	C^4	C6	C^4
25	-	TMS	-	TMS	-	TMS	-
26	1	B5	B^5	C10	C^5	C8	C^5
27	1	B6	B^6	C12	C^6	C10	C^6
28	1	B7	B^7	C14	C^7	C11	C^7
29	1	GND (Bank 1)	-	GND (Bank 1)	-	GND (Bank 1)	-
30	1	VCCO (Bank 1)	-	VCCO (Bank 1)	-	VCCO (Bank 1)	-
31	1	B8	B^8	D0	D^0	D15	D^7
32	1	B9	B^9	D2	D^1	D12	D^6

Downloaded from Elcodis.com electronic components distributor

ispMACH 4032V/B/C/Z and 4064V/B/C/Z Logic Signal Connections: 48-Pin TQFP (Cont.)

Pin Number	Bank Number	ispMACH 4032V/B/C/Z		ispMACH 4064V/B/C		ispMACH 4064Z	
		GLB/MC/Pad	ORP	GLB/MC/Pad	ORP	GLB/MC/Pad	ORP
33	1	B10	B^10	D4	D^2	D10	D^5
34	1	B11	B^11	D6	D^3	D8	D^4
35	-	TDO	-	TDO	-	TDO	-
36	-	VCC	-	VCC	-	VCC	-
37	-	GND	-	GND	-	GND	-
38	1	B12	B^12	D8	D^4	D6	D^3
39	1	B13	B^13	D10	D^5	D4	D^2
40	1	B14	B^14	D12	D^6	D2	D^1
41	1	B15/GOE1	B^15	D14/GOE1	D^7	D0/GOE1	D^0
42	1	CLK3/I	-	CLK3/I	-	CLK3/I	-
43	0	CLK0/I	-	CLK0/I	-	CLK0/I	-
44	0	A0/GOE0	A^0	A0/GOE0	A^0	A0/GOE0	A^0
45	0	A1	A^1	A2	A^1	A1	A^1
46	0	A2	A^2	A4	A^2	A2	A^2
47	0	A3	A^3	A6	A^3	A4	A^3
48	0	A4	A^4	A8	A^4	A6	A^4

ispMACH 4032Z and 4064Z Logic Signal Connections: 56-Ball csBGA

Ball Number	Bank Number	ispMACH 4032Z		ispMACH 4064Z	
		GLB/MC/Pad	ORP	GLB/MC/Pad	ORP
B1	-	TDI	-	TDI	-
C3	0	A5	A^5	A8	A^5
C1	0	A6	A^6	A10	A^6
D1	0	A7	A^7	A11	A^7
D3	0	GND (Bank 0)	-	GND (Bank 0)	-
E3	0	NC[1]	-	I[1]	-
E1	0	NC[1]	-	I[1]	-
F3	0	VCCO (Bank 0)	-	VCCO (Bank 0)	-
F1	0	A8	A^8	B15	B^7
G3	0	A9	A^9	B12	B^6
G1	0	A10	A^10	B10	B^5
H1	0	A11	A^11	B8	B^4
J1	0	NC	-	I	-
K1	-	TCK	-	TCK	-
K2	-	VCC	-	VCC	-
H3	-	GND	-	GND	-
K3	-	NC[1]	-	I[1]	-
K4	0	A12	A^12	B6	B^3
H4	0	A13	A^13	B4	B^2
H5	0	A14	A^14	B2	B^1

Downloaded from Elcodis.com electronic components distributor

ispMACH 4032Z and 4064Z Logic Signal Connections: 56-Ball csBGA (Cont.)

Ball Number	Bank Number	ispMACH 4032Z		ispMACH 4064Z	
		GLB/MC/Pad	ORP	GLB/MC/Pad	ORP
K5	0	A15	A^15	B0	B^0
H6	0	CLK1/I	-	CLK1/I	-
K6	1	CLK2/I	-	CLK2/I	-
H7	1	B0	B^0	C0	C^0
K7	1	B1	B^1	C1	C^1
K8	1	B2	B^2	C2	C^2
K9	1	B3	B^3	C4	C^3
K10	1	B4	B^4	C6	C^4
J10	-	TMS	-	TMS	-
H8	1	B5	B^5	C8	C^5
H10	1	B6	B^6	C10	C^6
G10	1	B7	B^7	C11	C^7
G8	1	GND (Bank 1)	-	GND (Bank 1)	-
F8	1	NC[1]	-	I[1]	-
F10	1	NC[1]	-	I[1]	-
E8	1	VCCO (Bank 1)	-	VCCO (Bank 1)	-
E10	1	B8	B^8	D15	D^7
D8	1	B9	B^9	D12	D^6
D10	1	B10	B^10	D10	D^5
C10	1	B11	B^11	D8	D^4
B10	1	NC[1]	-	I[1]	-
A10	-	TDO	-	TDO	-
A9	-	VCC	-	VCC	-
C8	-	GND	-	GND	-
A8	1	NC[1]	-	I[1]	-
A7	1	B12	B^12	D6	D^3
C7	1	B13	B^13	D4	D^2
C6	1	B14	B^14	D2	D^1
A6	1	B15/GOE1	B^15	D0/GOE1	D^0
C5	1	CLK3/I	-	CLK3/I	-
A5	0	CLK0/I	-	CLK0/I	-
C4	0	A0/GOE0	A^0	A0/GOE0	A^0
A4	0	A1	A^1	A1	A^1
A3	0	A2	A^2	A2	A^2
A2	0	A3	A^3	A4	A^3
A1	0	A4	A^4	A6	A^4

1. For device migration considerations, these NC pins are input signal pins in ispMACH 4064Z devices.

Downloaded from Elcodis.com electronic components distributor

ispMACH 4064V/B/C/Z, 4128V/B/C/Z, 4256V/B/C/Z Logic Signal Connections: 100-Pin TQFP

Pin Number	Bank Number	ispMACH 4064V/B/C/Z		ispMACH 4128V/B/C/Z		ispMACH 4256V/B/C/Z	
		GLB/MC/Pad	ORP	GLB/MC/Pad	ORP	GLB/MC/Pad	ORP
1	-	GND	-	GND	-	GND	-
2	-	TDI	-	TDI	-	TDI	-
3	0	A8	A^8	B0	B^0	C12	C^3
4	0	A9	A^9	B2	B^1	C10	C^2
5	0	A10	A^10	B4	B^2	C6	C^1
6	0	A11	A^11	B6	B^3	C2	C^0
7	0	GND (Bank 0)	-	GND (Bank 0)	-	GND (Bank 0)	-
8	0	A12	A^12	B8	B^4	D12	D^3
9	0	A13	A^13	B10	B^5	D10	D^2
10	0	A14	A^14	B12	B^6	D6	D^1
11	0	A15	A^15	B13	B^7	D4	D^0
12*	0	I	-	I	-	I	-
13	0	VCCO (Bank 0)	-	VCCO (Bank 0)	-	VCCO (Bank 0)	-
14	0	B15	B^15	C14	C^7	E4	E^0
15	0	B14	B^14	C12	C^6	E6	E^1
16	0	B13	B^13	C10	C^5	E10	E^2
17	0	B12	B^12	C8	C^4	E12	E^3
18	0	GND (Bank 0)	-	GND (Bank 0)	-	GND (Bank 0)	-
19	0	B11	B^11	C6	C^3	F2	F^0
20	0	B10	B^10	C5	C^2	F6	F^1
21	0	B9	B^9	C4	C^1	F10	F^2
22	0	B8	B^8	C2	C^0	F12	F^3
23*	0	I	-	I	-	I	-
24	-	TCK	-	TCK	-	TCK	-
25	-	VCC	-	VCC	-	VCC	-
26	-	GND	-	GND	-	GND	-
27*	0	I	-	I	-	I	-
28	0	B7	B^7	D13	D^7	G12	G^3
29	0	B6	B^6	D12	D^6	G10	G^2
30	0	B5	B^5	D10	D^5	G6	G^1
31	0	B4	B^4	D8	D^4	G2	G^0
32	0	GND (Bank 0)	-	GND (Bank 0)	-	GND (Bank 0)	-
33	0	VCCO (Bank 0)	-	VCCO (Bank 0)	-	VCCO (Bank 0)	-
34	0	B3	B^3	D6	D^3	H12	H^3
35	0	B2	B^2	D4	D^2	H10	H^2
36	0	B1	B^1	D2	D^1	H6	H^1
37	0	B0	B^0	D0	D^0	H2	H^0
38	0	CLK1/I	-	CLK1/I	-	CLK1/I	-
39	1	CLK2/I	-	CLK2/I	-	CLK2/I	-
40	-	VCC	-	VCC	-	VCC	-
41	1	C0	C^0	E0	E^0	I2	I^0

Downloaded from Elcodis.com electronic components distributor

ispMACH 4064V/B/C/Z, 4128V/B/C/Z, 4256V/B/C/Z Logic Signal Connections: 100-Pin TQFP (Cont.)

Pin Number	Bank Number	ispMACH 4064V/B/C/Z		ispMACH 4128V/B/C/Z		ispMACH 4256V/B/C/Z	
		GLB/MC/Pad	ORP	GLB/MC/Pad	ORP	GLB/MC/Pad	ORP
42	1	C1	C^1	E2	E^1	I6	I^1
43	1	C2	C^2	E4	E^2	I10	I^2
44	1	C3	C^3	E6	E^3	I12	I^3
45	1	VCCO (Bank 1)	-	VCCO (Bank 1)	-	VCCO (Bank 1)	-
46	1	GND (Bank 1)	-	GND (Bank 1)	-	GND (Bank 1)	-
47	1	C4	C^4	E8	E^4	J2	J^0
48	1	C5	C^5	E10	E^5	J6	J^1
49	1	C6	C^6	E12	E^6	J10	J^2
50	1	C7	C^7	E14	E^7	J12	J^3
51	-	GND	-	GND	-	GND	-
52	-	TMS	-	TMS	-	TMS	-
53	1	C8	C^8	F0	F^0	K12	K^3
54	1	C9	C^9	F2	F^1	K10	K^2
55	1	C10	C^10	F4	F^2	K6	K^1
56	1	C11	C^11	F6	F^3	K2	K^0
57	1	GND (Bank 1)	-	GND (Bank 1)	-	GND (Bank 1)	-
58	1	C12	C^12	F8	F^4	L12	L^3
59	1	C13	C^13	F10	F^5	L10	L^2
60	1	C14	C^14	F12	F^6	L6	L^1
61	1	C15	C^15	F13	F^7	L4	L^0
62*	1	I	-	I	-	I	-
63	1	VCCO (Bank 1)	-	VCCO (Bank 1)	-	VCCO (Bank 1)	-
64	1	D15	D^15	G14	G^7	M4	M^0
65	1	D14	D^14	G12	G^6	M6	M^1
66	1	D13	D^13	G10	G^5	M10	M^2
67	1	D12	D^12	G8	G^4	M12	M^3
68	1	GND (Bank 1)	-	GND (Bank 1)	-	GND (Bank 1)	-
69	1	D11	D^11	G6	G^3	N2	N^0
70	1	D10	D^10	G5	G^2	N6	N^1
71	1	D9	D^9	G4	G^1	N10	N^2
72	1	D8	D^8	G2	G^0	N12	N^3
73*	1	I	-	I	-	I	-
74	-	TDO	-	TDO	-	TDO	-
75	-	VCC	-	VCC	-	VCC	-
76	-	GND	-	GND	-	GND	-
77*	1	I	-	I	-	I	-
78	1	D7	D^7	H13	H^7	O12	O^3
79	1	D6	D^6	H12	H^6	O10	O^2
80	1	D5	D^5	H10	H^5	O6	O^1
81	1	D4	D^4	H8	H^4	O2	O^0
82	1	GND (Bank 1)	-	GND (Bank 1)	-	GND (Bank 1)	-

Downloaded from Elcodis.com electronic components distributor

ispMACH 4064V/B/C/Z, 4128V/B/C/Z, 4256V/B/C/Z Logic Signal Connections: 100-Pin TQFP (Cont.)

Pin Number	Bank Number	ispMACH 4064V/B/C/Z		ispMACH 4128V/B/C/Z		ispMACH 4256V/B/C/Z	
		GLB/MC/Pad	ORP	GLB/MC/Pad	ORP	GLB/MC/Pad	ORP
83	1	VCCO (Bank 1)	-	VCCO (Bank 1)	-	VCCO (Bank 1)	-
84	1	D3	D^3	H6	H^3	P12	P^3
85	1	D2	D^2	H4	H^2	P10	P^2
86	1	D1	D^1	H2	H^1	P6	P^1
87	1	D0/GOE1	D^0	H0/GOE1	H^0	P2/OE1	P^0
88	1	CLK3/I	-	CLK3/I	-	CLK3/I	-
89	0	CLK0/I	-	CLK0/I	-	CLK0/I	-
90	-	VCC	-	VCC	-	VCC	-
91	0	A0/GOE0	A^0	A0/GOE0	A^0	A2/GOE0	A^0
92	0	A1	A^1	A2	A^1	A6	A^1
93	0	A2	A^2	A4	A^2	A10	A^2
94	0	A3	A^3	A6	A^3	A12	A^3
95	0	VCCO (Bank 0)	-	VCCO (Bank 0)	-	VCCO (Bank 0)	-
96	0	GND (Bank 0)	-	GND (Bank 0)	-	GND (Bank 0)	-
97	0	A4	A^4	A8	A^4	B2	B^0
98	0	A5	A^5	A10	A^5	B6	B^1
99	0	A6	A^6	A12	A^6	B10	B^2
100	0	A7	A^7	A14	A^7	B12	B^3

*This pin is input only.

ispMACH 4128V/B/C Logic Signal Connections: 128-Pin TQFP

Pin Number	Bank Number	ispMACH 4128V/B/C	
		GLB/MC/Pad	ORP
1	0	GND	-
2	0	TDI	-
3	0	VCCO (Bank 0)	-
4	0	B0	B^0
5	0	B1	B^1
6	0	B2	B^2
7	0	B4	B^3
8	0	B5	B^4
9	0	B6	B^5
10	0	GND (Bank 0)	-
11	0	B8	B^6
12	0	B9	B^7
13	0	B10	B^8
14	0	B12	B^9
15	0	B13	B^10
16	0	B14	B^11
17	0	VCCO (Bank 0)	-
18	0	C14	C^11

Downloaded from Elcodis.com electronic components distributor

ispMACH 4128V/B/C Logic Signal Connections: 128-Pin TQFP (Cont.)

Pin Number	Bank Number	ispMACH 4128V/B/C	
		GLB/MC/Pad	ORP
19	0	C13	C^10
20	0	C12	C^9
21	0	C10	C^8
22	0	C9	C^7
23	0	C8	C^6
24	0	GND (Bank 0)	-
25	0	C6	C^5
26	0	C5	C^4
27	0	C4	C^3
28	0	C2	C^2
29	0	C0	C^0
30	0	VCCO (Bank 0)	-
31	0	TCK	-
32	0	VCC	-
33	0	GND	-
34	0	D14	D^11
35	0	D13	D^10
36	0	D12	D^9
37	0	D10	D^8
38	0	D9	D^7
39	0	D8	D^6
40	0	GND (Bank 0)	-
41	0	VCCO (Bank 0)	-
42	0	D6	D^5
43	0	D5	D^4
44	0	D4	D^3
45	0	D2	D^2
46	0	D1	D^1
47	0	D0	D^0
48	0	CLK1/I	-
49	1	GND (Bank 1)	-
50	1	CLK2/I	-
51	1	VCC	-
52	1	E0	E^0
53	1	E1	E^1
54	1	E2	E^2
55	1	E4	E^3
56	1	E5	E^4
57	1	E6	E^5
58	1	VCCO (Bank 1)	-
59	1	GND (Bank 1)	-
60	1	E8	E^6
61	1	E9	E^7

Downloaded from Elcodis.com electronic components distributor

ispMACH 4128V/B/C Logic Signal Connections: 128-Pin TQFP (Cont.)

Pin Number	Bank Number	ispMACH 4128V/B/C	
		GLB/MC/Pad	ORP
62	1	E10	E^8
63	1	E12	E^9
64	1	E14	E^11
65	1	GND	-
66	1	TMS	-
67	1	VCCO (Bank 1)	-
68	1	F0	F^0
69	1	F1	F^1
70	1	F2	F^2
71	1	F4	F^3
72	1	F5	F^4
73	1	F6	F^5
74	1	GND (Bank 1)	-
75	1	F8	F^6
76	1	F9	F^7
77	1	F10	F^8
78	1	F12	F^9
79	1	F13	F^10
80	1	F14	F^11
81	1	VCCO (Bank 1)	-
82	1	G14	G^11
83	1	G13	G^10
84	1	G12	G^9
85	1	G10	G^8
86	1	G9	G^7
87	1	G8	G^6
88	1	GND (Bank 1)	-
89	1	G6	G^5
90	1	G5	G^4
91	1	G4	G^3
92	1	G2	G^2
93	1	G0	G^0
94	1	VCCO (Bank 1)	-
95	1	TDO	-
96	1	VCC	-
97	1	GND	-
98	1	H14	H^11
99	1	H13	H^10
100	1	H12	H^9
101	1	H10	H^8
102	1	H9	H^7
103	1	H8	H^6
104	1	GND (Bank 1)	-

Downloaded from Elcodis.com electronic components distributor

ispMACH 4128V/B/C Logic Signal Connections: 128-Pin TQFP (Cont.)

Pin Number	Bank Number	ispMACH 4128V/B/C	
		GLB/MC/Pad	ORP
105	1	VCCO (Bank 1)	-
106	1	H6	H^5
107	1	H5	H^4
108	1	H4	H^3
109	1	H2	H^2
110	1	H1	H^1
111	1	H0/GOE1	H^0
112	1	CLK3/I	-
113	0	GND (Bank 0)	-
114	0	CLK0/I	-
115	0	VCC	-
116	0	A0/GOE0	A^0
117	0	A1	A^1
118	0	A2	A^2
119	0	A4	A^3
120	0	A5	A^4
121	0	A6	A^5
122	0	VCCO (Bank 0)	-
123	0	GND (Bank 0)	-
124	0	A8	A^6
125	0	A9	A^7
126	0	A10	A^8
127	0	A12	A^9
128	0	A14	A^11

ispMACH 4064Z, 4128Z and 4256Z Logic Signal Connections: 132-Ball csBGA

Ball Number	Bank Number	ispMACH 4064Z		ispMACH 4128Z		ispMACH 4256Z	
		GLB/MC/Pad	ORP	GLB/MC/Pad	ORP	GLB/MC/Pad	ORP
B1	-	GND	-	GND	-	GND	-
B2	-	TDI	-	TDI	-	TDI	-
C1	0	NC	-	VCCO (Bank 0)	-	VCCO (Bank 0)	-
C3	0	NC	-	B0	B^0	C12	C^6
C2	0	A8	A^8	B1	B^1	C10	C^5
D1	0	A9	A^9	B2	B^2	C8	C^4
D3	0	A10	A^10	B4	B^3	C6	C^3
D2	0	A11	A^11	B5	B^4	C4	C^2
E1	0	NC		B6	B^5	C2	C^1
E2	0	GND (Bank 0)	-	GND (Bank 0)	-	GND (Bank 0)	-

Downloaded from Elcodis.com electronic components distributor

ispMACH 4064Z, 4128Z and 4256Z Logic Signal Connections: 132-Ball csBGA (Cont.)

		ispMACH 4064Z		ispMACH 4128Z		ispMACH 4256Z	
Ball Number	Bank Number	GLB/MC/Pad	ORP	GLB/MC/Pad	ORP	GLB/MC/Pad	ORP
E3	0	NC	-	B8	B^6	D12	D^6
F2	0	A12	A^12	B9	B^7	D10	D^5
F1	0	A13	A^13	B10	B^8	D8	D^4
F3	0	A14	A^14	B12	B^9	D6	D^3
G1	0	A15	A^15	B13	B^10	D4	D^2
G2	0	I	-	B14	B^11	D2	D^1
G3	0	VCCO (Bank 0)	-	VCCO (Bank 0)	-	VCCO (Bank 0)	-
H2	0	NC	-	C14	C^11	E2	E^1
H1	0	B15	B^15	C13	C^10	E4	E^2
H3	0	B14	B^14	C12	C^9	E6	E^3
J1	0	B13	B^13	C10	C^8	E8	E^4
J2	0	B12	B^12	C9	C^7	E10	E^5
J3	0	NC	-	C8	C^6	E12	E^6
K2	0	GND (Bank 0)	-	GND (Bank 0)	-	GND (Bank 0)	-
K1	0	NC	-	C6	C^5	F2	F^1
K3	0	B11	B^11	C5	C^4	F4	F^2
L2	0	B10	B^10	C4	C^3	F6	F^3
L1	0	B9	B^9	C2	C^2	F8	F^4
L3	0	B8	B^8	C1	C^1	F10	F^5
M1	0	I	-	C0	C^0	F12	F^6
M2	0	NC	-	VCCO (Bank 0)	-	VCCO (Bank 0)	-
N1	-	TCK	-	TCK	-	TCK	-
P1	-	VCC	-	VCC	-	VCC	-
P2	-	GND	-	GND	-	GND	-
N2	0	I	-	D14	D^11	G12	G^6
P3	0	B7	B^7	D13	D^10	G10	G^5
M3	0	B6	B^6	D12	D^9	G8	G^4
N3	0	B5	B^5	D10	D^8	G6	G^3
P4	0	B4	B^4	D9	D^7	G4	G^2
M4	0	NC	-	D8	D^6	G2	G^1
N4	0	GND (Bank 0)	-	GND (Bank 0)	-	GND (Bank 0)	-
P5	0	VCCO (Bank 0)	-	VCCO (Bank 0)	-	VCCO (Bank 0)	-
N5	0	NC	-	D6	D^5	H12	H^6
M5	0	B3	B^3	D5	D^4	H10	H^5
N6	0	B2	B^2	D4	D^3	H8	H^4
P6	0	B1	B^1	D2	D^2	H6	H^3
M6	0	B0	B^0	D1	D^1	H4	H^2
P7	0	NC	-	D0	D^0	H2	H^1
N7	0	CLK1/I	-	CLK1/I	-	CLK1/I	-
M7	1	CLK2/I	-	CLK2/I	-	CLK2/I	-
N8	-	VCC	-	VCC	-	VCC	-

Downloaded from Elcodis.com electronic components distributor

ispMACH 4064Z, 4128Z and 4256Z Logic Signal Connections: 132-Ball csBGA (Cont.)

		ispMACH 4064Z		ispMACH 4128Z		ispMACH 4256Z	
Ball Number	Bank Number	GLB/MC/Pad	ORP	GLB/MC/Pad	ORP	GLB/MC/Pad	ORP
P8	1	NC[1]	-	NC[1]	-	I[1]	-
M8	1	NC	-	E0	E^0	I2	I^1
P9	1	C0	C^0	E1	E^1	I4	I^2
N9	1	C1	C^1	E2	E^2	I6	I^3
M9	1	C2	C^2	E4	E^3	I8	I^4
N10	1	C3	C^3	E5	E^4	I10	I^5
P10	1	NC	-	E6	E^5	I12	I^6
M10	1	VCCO (Bank 1)	-	VCCO (Bank 1)	-	VCCO (Bank 1)	-
N11	1	GND (Bank 1)	-	GND (Bank 1)	-	GND (Bank 1)	-
P11	1	NC	-	E8	E^6	J2	J^1
M11	1	C4	C^4	E9	E^7	J4	J^2
P12	1	C5	C^5	E10	E^8	J6	J^3
N12	1	C6	C^6	E12	E^9	J8	J^4
P13	1	C7	C^7	E13	E^10	J10	J^5
P14	1	NC	-	E14	E^11	J12	J^6
N14	-	GND	-	GND	-	GND	-
N13	-	TMS	-	TMS	-	TMS	-
M14	1	NC	-	VCCO (Bank 1)	-	VCCO (Bank 1)	-
M12	1	NC	-	F0	F^0	K12	K^6
M13	1	C8	C^8	F1	F^1	K10	K^5
L14	1	C9	C^9	F2	F^2	K8	K^4
L12	1	C10	C^10	F4	F^3	K6	K^3
L13	1	C11	C^11	F5	F^4	K4	K^2
K14	1	NC	-	F6	F^5	K2	K^1
K13	1	GND (Bank 1)	-	GND (Bank 1)	-	GND (Bank 1)	-
K12	1	NC	-	F8	F^6	L12	L^6
J13	1	C12	C^12	F9	F^7	L10	L^5
J14	1	C13	C^13	F10	F^8	L8	L^4
J12	1	C14	C^14	F12	F^9	L6	L^3
H14	1	C15	C^15	F13	F^10	L4	L^2
H13	1	I	-	F14	F^11	L2	L^1
H12	1	VCCO (Bank 1)	-	VCCO (Bank 1)	-	VCCO (Bank 1)	-
G13	1	NC	-	G14	G^11	M2	M^1
G14	1	NC	-	G13	G^10	M4	M^2
G12	1	D15	D^15	G12	G^9	M6	M^3
F14	1	D14	D^14	G10	G^8	M8	M^4
F13	1	D13	D^13	G9	G^7	M10	M^5
F12	1	D12	D^12	G8	G^6	M12	M^6
E13	1	GND (Bank 1)	-	GND (Bank 1)	-	GND (Bank 1)	-
E14	1	NC	-	G6	G^5	N2	N^1
E12	1	D11	D^11	G5	G^4	N4	N^2

Downloaded from Elcodis.com electronic components distributor

ispMACH 4064Z, 4128Z and 4256Z Logic Signal Connections: 132-Ball csBGA (Cont.)

		ispMACH 4064Z		ispMACH 4128Z		ispMACH 4256Z	
Ball Number	Bank Number	GLB/MC/Pad	ORP	GLB/MC/Pad	ORP	GLB/MC/Pad	ORP
D13	1	D10	D^10	G4	G^3	N6	N^3
D14	1	D9	D^9	G2	G^2	N8	N^4
D12	1	D8	D^8	G1	G^1	N10	N^5
C14	1	I	-	G0	G^0	N12	N^6
C13	1	NC	-	VCCO (Bank 1)	-	VCCO (Bank 1)	-
B14	-	TDO	-	TDO	-	TDO	-
A14	-	VCC	-	VCC	-	VCC	-
A13	-	GND	-	GND	-	GND	-
B13	1	NC	-	H14	H^11	O12	O^6
A12	1	I	-	H13	H^10	O10	O^5
C12	1	D7	D^7	H12	H^9	O8	O^4
B12	1	D6	D^6	H10	H^8	O6	O^3
A11	1	D5	D^5	H9	H^7	O4	O^2
C11	1	D4	D^4	H8	H^6	O2	O^1
B11	1	GND (Bank 1)	-	GND (Bank 1)	-	GND (Bank 1)	-
A10	1	VCCO (Bank 1)	-	VCCO (Bank 1)	-	VCCO (Bank 1)	-
B10	1	NC	-	H6	H^5	P12	P^6
C10	1	NC	-	H5	H^4	P10	P^5
B9	1	D3	D^3	H4	H^3	P8	P^4
A9	1	D2	D^2	H2	H^2	P6	P^3
C9	1	D1	D^1	H1	H^1	P4	P^2
A8	1	D0/GOE1	D^0	H0/GOE1	H^0	P2/GOE1	P^1
B8	1	CLK3/I	-	CLK3/I	-	CLK3/I	-
C8	0	CLK0/I	-	CLK0/I	-	CLK0/I	-
B7	-	VCC	-	VCC	-	VCC	-
A7	0	NC[1]	-	NC[1]	-	I[1]	-
C7	0	A0/GOE0	A^0	A0/GOE0	A^0	A2/GOE0	A^1
A6	0	A1	A^1	A1	A^1	A4	A^2
B6	0	A2	A^2	A2	A^2	A6	A^3
C6	0	A3	A^3	A4	A^3	A8	A^4
B5	0	NC	-	A5	A^4	A10	A^5
A5	0	NC	-	A6	A^5	A12	A^6
C5	0	VCCO (Bank 0)	-	VCCO (Bank 0)	-	VCCO (Bank 0)	-
B4	0	GND (Bank 0)	-	GND (Bank 0)	-	GND (Bank 0)	-
A4	0	NC	-	A8	A^6	B2	B^1
C4	0	A4	A^4	A9	A^7	B4	B^2
A3	0	A5	A^5	A10	A^8	B6	B^3
B3	0	A6	A^6	A12	A^9	B8	B^4
A2	0	A7	A^7	A13	A^10	B10	B^5
A1	0	NC	-	A14	A^11	B12	B^6

1. For device migration considerations, these NC pins are input signal pins in ispMACH 4256Z device.

Downloaded from Elcodis.com electronic components distributor

ispMACH 4128V and 4256V Logic Signal Connections: 144-Pin TQFP

Pin Number	Bank Number	ispMACH 4128V		ispMACH 4256V	
		GLB/MC/Pad	ORP	GLB/MC/Pad	ORP
1	-	GND	-	GND	-
2	-	TDI	-	TDI	-
3	0	VCCO (Bank 0)	-	VCCO (Bank 0)	-
4	0	B0	B^0	C12	C^6
5	0	B1	B^1	C10	C^5
6	0	B2	B^2	C8	C^4
7	0	B4	B^3	C6	C^3
8	0	B5	B^4	C4	C^2
9	0	B6	B^5	C2	C^1
10	0	GND (Bank 0)	-	GND (Bank 0)	-
11	0	B8	B^6	D14	D^7
12	0	B9	B^7	D12	D^6
13	0	B10	B^8	D10	D^5
14	0	B12	B^9	D8	D^4
15	0	B13	B^10	D6	D^3
16	0	B14	B^11	D4	D^2
17	-	NC[2]	-	I[2]	-
18	0	GND (Bank 0)[1]	-	NC[1]	-
19	0	VCCO (Bank 0)	-	VCCO (Bank 0)	-
20	0	NC[2]	-	I[2]	-
21	0	C14	C^11	E2	E^1
22	0	C13	C^10	E4	E^2
23	0	C12	C^9	E6	E^3
24	0	C10	C^8	E8	E^4
25	0	C9	C^7	E10	E^5
26	0	C8	C^6	E12	E^6
27	0	GND (Bank 0)	-	GND (Bank 0)	-
28	0	C6	C^5	F2	F^1
29	0	C5	C^4	F4	F^2
30	0	C4	C^3	F6	F^3
31	0	C2	C^2	F8	F^4
32	0	C1	C^1	F10	F^5
33	0	C0	C^0	F12	F^6
34	0	VCCO (Bank 0)	-	VCCO (Bank 0)	-
35	-	TCK	-	TCK	-
36	-	VCC	-	VCC	-
37	-	GND	-	GND	-
38	0	NC[2]	-	I[2]	-
39	0	D14	D^11	G12	G^6
40	0	D13	D^10	G10	G^5
41	0	D12	D^9	G8	G^4
42	0	D10	D^8	G6	G^3

Downloaded from Elcodis.com electronic components distributor

ispMACH 4128V and 4256V Logic Signal Connections: 144-Pin TQFP (Cont.)

Pin Number	Bank Number	ispMACH 4128V		ispMACH 4256V	
		GLB/MC/Pad	ORP	GLB/MC/Pad	ORP
43	0	D9	D^7	G4	G^2
44	0	D8	D^6	G2	G^1
45	0	NC[2]	-	I[2]	-
46	0	GND (Bank 0)	-	GND (Bank 0)	-
47	0	VCCO (Bank 0)	-	VCCO (Bank 0)	-
48	0	D6	D^5	H12	H^6
49	0	D5	D^4	H10	H^5
50	0	D4	D^3	H8	H^4
51	0	D2	D^2	H6	H^3
52	0	D1	D^1	H4	H^2
53	0	D0	D^0	H2	H^1
54	0	CLK1/I	-	CLK1/I	-
55	1	GND (Bank 1)	-	GND (Bank 1)	-
56	1	CLK2/I	-	CLK2/I	-
57	-	VCC	-	VCC	-
58	1	E0	E^0	I2	I^1
59	1	E1	E^1	I4	I^2
60	1	E2	E^2	I6	I^3
61	1	E4	E^3	I8	I^4
62	1	E5	E^4	I10	I^5
63	1	E6	E^5	I12	I^6
64	1	VCCO (Bank 1)	-	VCCO (Bank 1)	-
65	1	GND (Bank 1)	-	GND (Bank 1)	-
66	1	E8	E^6	J2	J^1
67	1	E9	E^7	J4	J^2
68	1	E10	E^8	J6	J^3
69	1	E12	E^9	J8	J^4
70	1	E13	E^10	J10	J^5
71	1	E14	E^11	J12	J^6
72	1	NC[2]	-	I[2]	-
73	-	GND	-	GND	-
74	-	TMS	-	TMS	-
75	1	VCCO (Bank 1)	-	VCCO (Bank 1)	-
76	1	F0	F^0	K12	K^6
77	1	F1	F^1	K10	K^5
78	1	F2	F^2	K8	K^4
79	1	F4	F^3	K6	K^3
80	1	F5	F^4	K4	K^2
81	1	F6	F^5	K2	K^1
82	1	GND (Bank 1)	-	GND (Bank 1)	-
83	1	F8	F^6	L14	L^7
84	1	F9	F^7	L12	L^6
85	1	F10	F^8	L10	L^5

Downloaded from Elcodis.com electronic components distributor

ispMACH 4128V and 4256V Logic Signal Connections: 144-Pin TQFP (Cont.)

Pin Number	Bank Number	ispMACH 4128V		ispMACH 4256V	
		GLB/MC/Pad	ORP	GLB/MC/Pad	ORP
86	1	F12	F^9	L8	L^4
87	1	F13	F^10	L6	L^3
88	1	F14	F^11	L4	L^2
89	1	NC[2]	-	I[2]	-
90	1	GND (Bank 1)[1]	-	NC[1]	-
91	1	VCCO (Bank 1)	-	VCCO (Bank 1)	-
92	1	NC[2]	-	I[2]	-
93	1	G14	G^11	M2	M^1
94	1	G13	G^10	M4	M^2
95	1	G12	G^9	M6	M^3
96	1	G10	G^8	M8	M^4
97	1	G9	G^7	M10	M^5
98	1	G8	G^6	M12	M^6
99	1	GND (Bank 1)	-	GND (Bank 1)	-
100	1	G6	G^5	N2	N^1
101	1	G5	G^4	N4	N^2
102	1	G4	G^3	N6	N^3
103	1	G2	G^2	N8	N^4
104	1	G1	G^1	N10	N^5
105	1	G0	G^0	N12	N^6
106	1	VCCO (Bank 1)	-	VCCO (Bank 1)	-
107	-	TDO	-	TDO	-
108	-	VCC	-	VCC	-
109	-	GND	-	GND	-
110	1	NC[2]	-	I[2]	-
111	1	H14	H^11	O12	O^6
112	1	H13	H^10	O10	O^5
113	1	H12	H^9	O8	O^4
114	1	H10	H^8	O6	O^3
115	1	H9	H^7	O4	O^2
116	1	H8	H^6	O2	O^1
117	1	NC[2]	-	I[2]	-
118	1	GND (Bank 1)	-	GND (Bank 1)	-
119	1	VCCO (Bank 1)	-	VCCO (Bank 1)	-
120	1	H6	H^5	P12	P^6
121	1	H5	H^4	P10	P^5
122	1	H4	H^3	P8	P^4
123	1	H2	H^2	P6	P^3
124	1	H1	H^1	P4	P^2
125	1	H0/GOE1	H^0	P2/GOE1	P^1
126	1	CLK3/I	-	CLK3/I	-
127	0	GND (Bank 0)	-	GND (Bank 0)	-
128	0	CLK0/I	-	CLK0/I	-

Downloaded from Elcodis.com electronic components distributor

ispMACH 4128V and 4256V Logic Signal Connections: 144-Pin TQFP (Cont.)

Pin Number	Bank Number	ispMACH 4128V		ispMACH 4256V	
		GLB/MC/Pad	ORP	GLB/MC/Pad	ORP
129	-	VCC	-	VCC	-
130	0	A0/GOE0	A^0	A2/GOE0	A^1
131	0	A1	A^1	A4	A^2
132	0	A2	A^2	A6	A^3
133	0	A4	A^3	A8	A^4
134	0	A5	A^4	A10	A^5
135	0	A6	A^5	A12	A^6
136	0	VCCO (Bank 0)	-	VCCO (Bank 0)	-
137	0	GND (Bank 0)	-	GND (Bank 0)	-
138	0	A8	A^6	B2	B^1
139	0	A9	A^7	B4	B^2
140	0	A10	A^8	B6	B^3
141	0	A12	A^9	B8	B^4
142	0	A13	A^10	B10	B^5
143	0	A14	A^11	B12	B^6
144	0	NC[2]	-	I[2]	-

1. For device migration considerations, these NC pins are GND pins for I/O banks in ispMACH 4128V devices.
2. For device migration considerations, these NC pins are input signal pins in ispMACH 4256V devices.

ispMACH 4256V/B/C/Z, 4384V/B/C, 4512V/B/C, Logic Signal Connections: 176-Pin TQFP

Pin Number	Bank Number	ispMACH 4256V/B/C/Z		ispMACH 4384V/B/C		ispMACH 4512V/B/C	
		GLB/MC/Pad	ORP	GLB/MC/Pad	ORP	GLB/MC/Pad	ORP
1	-	NC	-	NC	-	NC	-
2	-	GND	-	GND	-	GND	-
3	-	TDI	-	TDI	-	TDI	-
4	0	VCCO (Bank 0)	-	VCCO (Bank 0)	-	VCCO (Bank 0)	-
5	0	C14	C^7	C14	C^7	C14	C^7
6	0	C12	C^6	C12	C^6	C12	C^6
7	0	C10	C^5	C10	C^5	C10	C^5
8	0	C8	C^4	C8	C^4	C8	C^4
9	0	C6	C^3	C6	C^3	C6	C^3
10	0	C4	C^2	C4	C^2	C4	C^2
11	0	C2	C^1	C2	C^1	C2	C^1
12	0	C0	C^0	C0	C^0	C0	C^0
13	0	GND (Bank 0)	-	GND (Bank 0)	-	GND (Bank 0)	-
14	0	D14	D^7	E14	E^7	G14	G^7
15	0	D12	D^6	E12	E^6	G12	G^6
16	0	D10	D^5	E10	E^5	G10	G^5
17	0	D8	D^4	E8	E^4	G8	G^4
18	0	D6	D^3	E6	E^3	G6	G^3

Downloaded from Elcodis.com electronic components distributor

ispMACH 4256V/B/C/Z, 4384V/B/C, 4512V/B/C, Logic Signal Connections: 176-Pin TQFP (Cont.)

Pin Number	Bank Number	ispMACH 4256V/B/C/Z		ispMACH 4384V/B/C		ispMACH 4512V/B/C	
		GLB/MC/Pad	ORP	GLB/MC/Pad	ORP	GLB/MC/Pad	ORP
19	0	D4	D^2	E4	E^2	G4	G^2
20	0	D2	D^1	E2	E^1	G2	G^1
21	0	D0	D^0	E0	E^0	G0	G^0
22	0	VCCO (Bank 0)	-	VCCO (Bank 0)	-	VCCO (Bank 0)	-
23	0	E0	E^0	H0	H^0	J0	J^0
24	0	E2	E^1	H2	H^1	J2	J^1
25	0	E4	E^2	H4	H^2	J4	J^2
26	0	E6	E^3	H6	H^3	J6	J^3
27	0	E8	E^4	H8	H^4	J8	J^4
28	0	E10	E^5	H10	H^5	J10	J^5
29	0	E12	E^6	H12	H^6	J12	J^6
30	0	E14	E^7	H14	H^7	J14	J^7
31	0	GND (Bank 0)	-	GND (Bank 0)	-	GND (Bank 0)	-
32	0	F0	F^0	J0	J^0	N0	N^0
33	0	F2	F^1	J2	J^1	N2	N^1
34	0	F4	F^2	J4	J^2	N4	N^2
35	0	F6	F^3	J6	J^3	N6	N^3
36	0	F8	F^4	J8	J^4	N8	N^4
37	0	F10	F^5	J10	J^5	N10	N^5
38	0	F12	F^6	J12	J^6	N12	N^6
39	0	F14	F^7	J14	J^7	N14	N^7
40	0	VCCO (Bank 0)	-	VCCO (Bank 0)	-	VCCO (Bank 0)	-
41	-	TCK	-	TCK	-	TCK	-
42	-	VCC	-	VCC	-	VCC	-
43	-	NC	-	NC	-	NC	-
44	-	NC	-	NC	-	NC	-
45	-	NC	-	NC	-	NC	-
46	-	GND	-	GND (Bank 0)	-	GND	-
47	0	G14	G^7	K14	K^7	O14	O^7
48	0	G12	G^6	K12	K^6	O12	O^6
49	0	G10	G^5	K10	K^5	O10	O^5
50	0	G8	G^4	K8	K^4	O8	O^4
51	0	G6	G^3	K6	K^3	O6	O^3
52	0	G4	G^2	K4	K^2	O4	O^2
53	0	G2	G^1	K2	K^1	O2	O^1
54	0	G0	G^0	K0	K^0	O0	O^0
55	0	GND (Bank 0)	-	GND (Bank 0)	-	GND (Bank 0)	-
56	0	VCCO (Bank 0)	-	VCCO (Bank 0)	-	VCCO (Bank 0)	-
57	0	H14	H^7	L14	L^7	P14	P^7
58	0	H12	H^6	L12	L^6	P12	P^6
59	0	H10	H^5	L10	L^5	P10	P^5

Downloaded from Elcodis.com electronic components distributor

ispMACH 4256V/B/C/Z, 4384V/B/C, 4512V/B/C, Logic Signal Connections: 176-Pin TQFP (Cont.)

Pin Number	Bank Number	ispMACH 4256V/B/C/Z		ispMACH 4384V/B/C		ispMACH 4512V/B/C	
		GLB/MC/Pad	ORP	GLB/MC/Pad	ORP	GLB/MC/Pad	ORP
60	0	H8	H^4	L8	L^4	P8	P^4
61	0	H6	H^3	L6	L^3	P6	P^3
62	0	H4	H^2	L4	L^2	P4	P^2
63	0	H2	H^1	L2	L^1	P2	P^1
64	0	H0	H^0	L0	L^0	P0	P^0
65	-	GND	-	GND	-	GND	-
66	0	CLK1/I	-	CLK1/I	-	CLK1/I	-
67	1	GND (Bank 1)	-	GND (Bank 1)	-	GND (Bank 1)	-
68	1	CLK2/I	-	CLK2/I	-	CLK2/I	-
69	-	VCC	-	VCC	-	VCC	-
70	1	I0	I^0	M0	M^0	AX0	AX^0
71	1	I2	I^1	M2	M^1	AX2	AX^1
72	1	I4	I^2	M4	M^2	AX4	AX^2
73	1	I6	I^3	M6	M^3	AX6	AX^3
74	1	I8	I^4	M8	M^4	AX8	AX^4
75	1	I10	I^5	M10	M^5	AX10	AX^5
76	1	I12	I^6	M12	M^6	AX12	AX^6
77	1	I14	I^7	M14	M^7	AX14	AX^7
78	1	VCCO (Bank 1)	-	VCCO (Bank 1)	-	VCCO (Bank 1)	-
79	1	GND (Bank 1)	-	GND (Bank 1)	-	GND (Bank 1)	-
80	1	J0	J^0	N0	N^0	BX0	BX^0
81	1	J2	J^1	N2	N^1	BX2	BX^1
82	1	J4	J^2	N4	N^2	BX4	BX^2
83	1	J6	J^3	N6	N^3	BX6	BX^3
84	1	J8	J^4	N8	N^4	BX8	BX^4
85	1	J10	J^5	N10	N^5	BX10	BX^5
86	1	J12	J^6	N12	N^6	BX12	BX^6
87	1	J14	J^7	N14	N^7	BX14	BX^7
88	-	VCC	-	VCC	-	VCC	-
89	-	NC	-	NC	-	NC	-
90	-	GND	-	GND	-	GND	-
91	-	TMS	-	TMS	-	TMS	-
92	1	VCCO (Bank 1)	-	VCCO (Bank 1)	-	VCCO (Bank 1)	-
93	1	K14	K^7	O14	O^7	CX14	CX^7
94	1	K12	K^6	O12	O^6	CX12	CX^6
95	1	K10	K^5	O10	O^5	CX10	CX^5
96	1	K8	K^4	O8	O^4	CX8	CX^4
97	1	K6	K^3	O6	O^3	CX6	CX^3
98	1	K4	K^2	O4	O^2	CX4	CX^2
99	1	K2	K^1	O2	O^1	CX2	CX^1
100	1	K0	K^0	O0	O^0	CX0	CX^0

Downloaded from Elcodis.com electronic components distributor

ispMACH 4256V/B/C/Z, 4384V/B/C, 4512V/B/C, Logic Signal Connections: 176-Pin TQFP (Cont.)

Pin Number	Bank Number	ispMACH 4256V/B/C/Z		ispMACH 4384V/B/C		ispMACH 4512V/B/C	
		GLB/MC/Pad	ORP	GLB/MC/Pad	ORP	GLB/MC/Pad	ORP
101	1	GND (Bank 1)	-	GND (Bank 1)	-	GND (Bank 1)	-
102	1	L14	L^7	AX14	AX^7	GX14	GX^7
103	1	L12	L^6	AX12	AX^6	GX12	GX^6
104	1	L10	L^5	AX10	AX^5	GX10	GX^5
105	1	L8	L^4	AX8	AX^4	GX8	GX^4
106	1	L6	L^3	AX6	AX^3	GX6	GX^3
107	1	L4	L^2	AX4	AX^2	GX4	GX^2
108	1	L2	L^1	AX2	AX^1	GX2	GX^1
109	1	L0	L^0	AX0	AX^0	GX0	GX^0
110	1	VCCO (Bank 1)	-	VCCO (Bank 1)	-	VCCO (Bank 1)	-
111	1	M0	M^0	DX0	DX^0	JX0	JX^0
112	1	M2	M^1	DX2	DX^1	JX2	JX^1
113	1	M4	M^2	DX4	DX^2	JX4	JX^2
114	1	M6	M^3	DX6	DX^3	JX6	JX^3
115	1	M8	M^4	DX8	DX^4	JX8	JX^4
116	1	M10	M^5	DX10	DX^5	JX10	JX^5
117	1	M12	M^6	DX12	DX^6	JX12	JX^6
118	1	M14	M^7	DX14	DX^7	JX14	JX^7
119	1	GND (Bank 1)	-	GND (Bank 1)	-	GND (Bank 1)	-
120	1	N0	N^0	FX0	FX^0	NX0	NX^0
121	1	N2	N^1	FX2	FX^1	NX2	NX^1
122	1	N4	N^2	FX4	FX^2	NX4	NX^2
123	1	N6	N^3	FX6	FX^3	NX6	NX^3
124	1	N8	N^4	FX8	FX^4	NX8	NX^4
125	1	N10	N^5	FX10	FX^5	NX10	NX^5
126	1	N12	N^6	FX12	FX^6	NX12	NX^6
127	1	N14	N^7	FX14	FX^7	NX14	NX^7
128	1	VCCO (Bank 1)	-	VCCO (Bank 1)	-	VCCO (Bank 1)	-
129	-	TDO	-	TDO	-	TDO	-
130	-	VCC	-	VCC	-	VCC	-
131	-	NC	-	NC	-	NC	-
132	-	NC	-	NC	-	NC	-
133	-	NC	-	NC	-	NC	-
134	-	GND	-	GND	-	GND	-
135	1	O14	O^7	GX14	GX^7	OX14	OX^7
136	1	O12	O^6	GX12	GX^6	OX12	OX^6
137	1	O10	O^5	GX10	GX^5	OX10	OX^5
138	1	O8	O^4	GX8	GX^4	OX8	OX^4
139	1	O6	O^3	GX6	GX^3	OX6	OX^3
140	1	O4	O^2	GX4	GX^2	OX4	OX^2
141	1	O2	O^1	GX2	GX^1	OX2	OX^1

Downloaded from Elcodis.com electronic components distributor

ispMACH 4256V/B/C/Z, 4384V/B/C, 4512V/B/C, Logic Signal Connections: 176-Pin TQFP (Cont.)

Pin Number	Bank Number	ispMACH 4256V/B/C/Z		ispMACH 4384V/B/C		ispMACH 4512V/B/C	
		GLB/MC/Pad	ORP	GLB/MC/Pad	ORP	GLB/MC/Pad	ORP
142	1	O0	O^0	GX0	GX^0	OX0	OX^0
143	1	GND (Bank 1)	-	GND (Bank 1)	-	GND (Bank 1)	-
144	1	VCCO (Bank 1)	-	VCCO (Bank 1)	-	VCCO (Bank 1)	-
145	1	P14	P^7	HX14	HX^7	PX14	PX^7
146	1	P12	P^6	HX12	HX^6	PX12	PX^6
147	1	P10	P^5	HX10	HX^5	PX10	PX^5
148	1	P8	P^4	HX8	HX^4	PX8	PX^4
149	1	P6	P^3	HX6	HX^3	PX6	PX^3
150	1	P4	P^2	HX4	HX^2	PX4	PX^2
151	1	P2/GOE1	P^1	HX2/GOE1	HX^1	PX2/GOE1	PX^1
152	1	P0	P^0	HX0	HX^0	PX0	PX^0
153	-	GND	-	GND	-	GND	-
154	1	CLK3/I	-	CLK3/I	-	CLK3/I	-
155	0	GND (Bank 0)	-	GND (Bank 0)	-	GND (Bank 0)	-
156	0	CLK0/I	-	CLK0/I	-	CLK0/I	-
157	-	VCC	-	VCC	-	VCC	-
158	0	A0	A^0	A0	A^0	A0	A^0
159	0	A2/GOE0	A^1	A2/GOE0	A^1	A2//GOE0	A^1
160	0	A4	A^2	A4	A^2	A4	A^2
161	0	A6	A^3	A6	A^3	A6	A^3
162	0	A8	A^4	A8	A^4	A8	A^4
163	0	A10	A^5	A10	A^5	A10	A^5
164	0	A12	A^6	A12	A^6	A12	A^6
165	0	A14	A^7	A14	A^7	A14	A^7
166	0	VCCO (Bank 0)	-	VCCO (Bank 0)	-	VCCO (Bank 0)	-
167	0	GND (Bank 0)	-	GND (Bank 0)	-	GND (Bank 0)	-
168	0	B0	B^0	B0	B^0	B0	B^0
169	0	B2	B^1	B2	B^1	B2	B^1
170	0	B4	B^2	B4	B^2	B4	B^2
171	0	B6	B^3	B6	B^3	B6	B^3
172	0	B8	B^4	B8	B^4	B8	B^4
173	0	B10	B^5	B10	B^5	B10	B^5
174	0	B12	B^6	B12	B^6	B12	B^6
175	0	B14	B^7	B14	B^7	B14	B^7
176	-	VCC	-	VCC	-	VCC	-

Downloaded from Elcodis.com electronic components distributor

ispMACH 4256V/B/C, 4384V/B/C, 4512V/B/C Logic Signal Connections: 256-Ball ftBGA/fpBGA

Ball Number	I/O Bank	ispMACH 4256V/B/C 128-I/O		ispMACH 4256V/B/C 160-I/O		ispMACH 4384V/B/C		ispMACH 4512V/B/C	
		GLB/MC/Pad	ORP	GLB/MC/Pad	ORP	GLB/MC/Pad	ORP	GLB/MC/Pad	ORP
-	-	-	-	-	-	VCC	-	VCC	-
-	-	GND	-	GND	-	GND	-	GND	-
C3	-	TDI	-	TDI	-	TDI	-	TDI	-
-	0	VCCO (Bank 0)	-	VCCO (Bank 0)	-	VCCO (Bank 0)	-	VCCO (Bank 0)	-
B1	0	C14	C^7	C14	C^9	C14	C^7	C14	C^7
F5	0	C12	C^6	C12	C^8	C12	C^6	C12	C^6
D3	0	C10	C^5	C10	C^7	C10	C^5	C10	C^5
C1	0	C8	C^4	C9	C^6	C8	C^4	C8	C^4
C2	0	C6	C^3	C8	C^5	C6	C^3	C6	C^3
E3	0	C4	C^2	C6	C^4	C4	C^2	C4	C^2
D2	0	C2	C^1	C4	C^3	C2	C^1	C2	C^1
F6	0	C0	C^0	C2	C^2	C0	C^0	C0	C^0
D1	0	NC	-	C1	C^1	F6	F^3	H0	H^0
E2	0	NC	-	C0	C^0	F4	F^2	H4	H^1
E4	0	NC	-	NC	-	D6	D^3	F4	F^2
G5	0	NC	-	NC	-	D4	D^2	F6	F^3
E1	0	NC	-	NC	-	NC	-	F8	F^4
-	0	-	-	VCCO (Bank 0)	-	VCCO (Bank 0)	-	VCCO (Bank 0)	-
-	0	GND (Bank 0)	-	GND (Bank 0)	-	GND (Bank 0)	-	GND (Bank 0)	-
F2	0	NC	-	NC	-	NC	-	F10	F^5
F1	0	NC	-	NC	-	D2	D^1	F12	F^6
G1	0	NC	-	NC	-	D0	D^0	F14	F^7
G6	0	NC	-	D14	D^9	F2	F^1	H8	H^2
G4	0	NC	-	D12	D^8	F0	F^0	H12	H^3
H6	0	D14	D^7	D10	D^7	E14	E^7	G14	G^7
G3	0	D12	D^6	D9	D^6	E12	E^6	G12	G^6
H5	0	D10	D^5	D8	D^5	E10	E^5	G10	G^5
G2	0	D8	D^4	D6	D^4	E8	E^4	G8	G^4
H1	0	D6	D^3	D4	D^3	E6	E^3	G6	G^3
H2	0	D4	D^2	D2	D^2	E4	E^2	G4	G^2
H3	0	D2	D^1	D1	D^1	E2	E^1	G2	G^1
H4	0	D0	D^0	D0	D^0	E0	E^0	G0	G^0
-	0	VCCO (Bank 0)	-	VCCO (Bank 0)	-	VCCO (Bank 0)	-	VCCO (Bank 0)	-
-	0	-	-	GND (Bank 0)	-	GND (Bank 0)	-	GND (Bank 0)	-
J4	0	E0	E^0	E0	E^0	H0	H^0	J0	J^0
J3	0	E2	E^1	E1	E^1	H2	H^1	J2	J^1
J2	0	E4	E^2	E2	E^2	H4	H^2	J4	J^2
J1	0	E6	E^3	E4	E^3	H6	H^3	J6	J^3
K1	0	E8	E^4	E6	E^4	H8	H^4	J8	J^4
J5	0	E10	E^5	E8	E^5	H10	H^5	J10	J^5
K2	0	E12	E^6	E9	E^6	H12	H^6	J12	J^6

Downloaded from Elcodis.com electronic components distributor

ispMACH 4256V/B/C, 4384V/B/C, 4512V/B/C Logic Signal Connections: 256-Ball ftBGA/fpBGA (Cont.)

Ball Number	I/O Bank	ispMACH 4256V/B/C 128-I/O		ispMACH 4256V/B/C 160-I/O		ispMACH 4384V/B/C		ispMACH 4512V/B/C	
		GLB/MC/Pad	ORP	GLB/MC/Pad	ORP	GLB/MC/Pad	ORP	GLB/MC/Pad	ORP
J6	0	E14	E^7	E10	E^7	H14	H^7	J14	J^7
K3	0	NC	-	E12	E^8	G0	G^0	I0	I^0
K4	0	NC	-	E14	E^9	G2	G^1	I4	I^1
L1	0	NC	-	NC	-	I14	I^7	K0	K^0
L2	0	NC	-	NC	-	I12	I^6	K2	K^1
M1	0	NC	-	NC	-	NC	-	K4	K^2
-	0	GND (Bank 0)	-	GND (Bank 0)	-	GND (Bank 0)	-	GND (Bank 0)	-
-	0	-	-	VCCO (Bank 0)	-	VCCO (Bank 0)	-	VCCO (Bank 0)	-
M2	0	NC	-	NC	-	NC	-	K6	K^3
N1	0	NC	-	NC	-	I10	I^5	K8	K^4
M3	0	NC	-	NC	-	I8	I^4	K10	K^5
M4	0	NC	-	F0	F^0	G4	G^2	I8	I^2
N2	0	NC	-	F1	F^1	G6	G^3	I12	I^3
K5	0	F0	F^0	F2	F^2	J0	J^0	N0	N^0
P1	0	F2	F^1	F4	F^3	J2	J^1	N2	N^1
K6	0	F4	F^2	F6	F^4	J4	J^2	N4	N^2
N3	0	F6	F^3	F8	F^5	J6	J^3	N6	N^3
L5	0	F8	F^4	F9	F^6	J8	J^4	N8	N^4
P2	0	F10	F^5	F10	F^7	J10	J^5	N10	N^5
L6	0	F12	F^6	F12	F^8	J12	J^6	N12	N^6
R1	0	F14	F^7	F14	F^9	J14	J^7	N14	N^7
-	0	VCCO (Bank 0)	-	VCCO (Bank 0)	-	VCCO (Bank 0)	-	VCCO (Bank 0)	-
P3	-	TCK	-	TCK	-	TCK	-	TCK	-
-	-	VCC	-	VCC	-	VCC	-	VCC	-
-	-	GND	-	GND	-	GND	-	GND	-
-	0	-	-	GND (Bank 0)	-	GND (Bank 0)	-	GND (Bank 0)	-
T2	0	NC	-	G14	G^9	I6	I^3	K12	K^6
M5	0	NC	-	G12	G^8	I4	I^2	K14	K^7
N4	0	G14	G^7	G10	G^7	K14	K^7	O14	O^7
T3	0	G12	G^6	G9	G^6	K12	K^6	O12	O^6
R3	0	G10	G^5	G8	G^5	K10	K^5	O10	O^5
M6	0	G8	G^4	G6	G^4	K8	K^4	O8	O^4
P4	0	G6	G^3	G4	G^3	K6	K^3	O6	O^3
L7	0	G4	G^2	G2	G^2	K4	K^2	O4	O^2
N5	0	G2	G^1	G1	G^1	K2	K^1	O2	O^1
M7	0	G0	G^0	G0	G^0	K0	K^0	O0	O^0
P5	0	NC	-	NC	-	G8	G^4	M0	M^0
R4	0	NC	-	NC	-	G10	G^5	M4	M^1
T4	0	NC	-	NC	-	NC	-	L0	L^0
-	0	GND (Bank 0)	-	GND (Bank 0)	-	GND (Bank 0)	-	GND (Bank 0)	-
-	0	VCCO (Bank 0)	-	VCCO (Bank 0)	-	VCCO (Bank 0)	-	VCCO (Bank 0)	-

Downloaded from Elcodis.com electronic components distributor

ispMACH 4256V/B/C, 4384V/B/C, 4512V/B/C Logic Signal Connections: 256-Ball ftBGA/fpBGA (Cont.)

Ball Number	I/O Bank	ispMACH 4256V/B/C 128-I/O		ispMACH 4256V/B/C 160-I/O		ispMACH 4384V/B/C		ispMACH 4512V/B/C	
		GLB/MC/Pad	ORP	GLB/MC/Pad	ORP	GLB/MC/Pad	ORP	GLB/MC/Pad	ORP
R5	0	NC	-	NC	-	NC	-	L4	L^1
T5	0	NC	-	NC	-	I2	I^1	L8	L^2
R6	0	NC	-	NC	-	I0	I^0	L12	L^3
T6	0	NC	-	H14	H^9	G12	G^6	M8	M^2
N7	0	NC	-	H12	H^8	G14	G^7	M12	M^3
P7	0	H14	H^7	H10	H^7	L14	L^7	P14	P^7
R7	0	H12	H^6	H9	H^6	L12	L^6	P12	P^6
L8	0	H10	H^5	H8	H^5	L10	L^5	P10	P^5
T7	0	H8	H^4	H6	H^4	L8	L^4	P8	P^4
M8	0	H6	H^3	H4	H^3	L6	L^3	P6	P^3
N8	0	H4	H^2	H2	H^2	L4	L^2	P4	P^2
R8	0	H2	H^1	H1	H^1	L2	L^1	P2	P^1
P8	0	H0	H^0	H0	H^0	L0	L^0	P0	P^0
-	-	GND	-	GND	-	GND	-	GND	-
T8	0	CLK1/I	-	CLK1/I	-	CLK1/I	-	CLK1/I	-
-	1	GND (Bank 1)	-	GND (Bank 1)	-	GND (Bank 1)	-	GND (Bank 1)	-
N9	1	CLK2/I	-	CLK2/I	-	CLK2/I	-	CLK2/I	-
-	-	VCC	-	VCC	-	VCC	-	VCC	-
P9	1	I0	I^0	I0	I^0	M0	M^0	AX0	AX^0
R9	1	I2	I^1	I1	I^1	M2	M^1	AX2	AX^1
T9	1	I4	I^2	I2	I^2	M4	M^2	AX4	AX^2
T10	1	I6	I^3	I4	I^3	M6	M^3	AX6	AX^3
R10	1	I8	I^4	I6	I^4	M8	M^4	AX8	AX^4
M9	1	I10	I^5	I8	I^5	M10	M^5	AX10	AX^5
P10	1	I12	I^6	I9	I^6	M12	M^6	AX12	AX^6
L9	1	I14	I^7	I10	I^7	M14	M^7	AX14	AX^7
N10	1	NC	-	I12	I^8	BX14	BX^7	DX0	DX^0
T11	1	NC	-	I14	I^9	BX12	BX^6	DX4	DX^1
R11	1	NC	-	NC	-	P0	P^0	EX0	EX^0
T12	1	NC	-	NC	-	P2	P^1	EX4	EX^1
N12	1	NC	-	NC	-	NC	-	EX8	EX^2
-	1	VCCO (Bank 1)	-	VCCO (Bank 1)	-	VCCO (Bank 1)	-	VCCO (Bank 1)	-
-	1	GND (Bank 1)	-	GND (Bank 1)	-	GND (Bank 1)	-	GND (Bank 1)	-
R12	1	NC	-	NC	-	NC	-	EX12	EX^3
T13	1	NC	-	J0	J^0	BX10	BX^5	DX8	DX^2
P12	1	NC	-	J1	J^1	BX8	BX^4	DX12	DX^3
M10	1	J0	J^0	J2	J^2	N0	N^0	BX0	BX^0
R13	1	J2	J^1	J4	J^3	N2	N^1	BX2	BX^1
L10	1	J4	J^2	J6	J^4	N4	N^2	BX4	BX^2
T14	1	J6	J^3	J8	J^5	N6	N^3	BX6	BX^3
M11	1	J8	J^4	J9	J^6	N8	N^4	BX8	BX^4

Downloaded from Elcodis.com electronic components distributor

ispMACH 4256V/B/C, 4384V/B/C, 4512V/B/C Logic Signal Connections: 256-Ball ftBGA/fpBGA (Cont.)

Ball Number	I/O Bank	ispMACH 4256V/B/C 128-I/O		ispMACH 4256V/B/C 160-I/O		ispMACH 4384V/B/C		ispMACH 4512V/B/C	
		GLB/MC/Pad	ORP	GLB/MC/Pad	ORP	GLB/MC/Pad	ORP	GLB/MC/Pad	ORP
R14	1	J10	J^5	J10	J^7	N10	N^5	BX10	BX^5
P13	1	J12	J^6	J12	J^8	N12	N^6	BX12	BX^6
N13	1	J14	J^7	J14	J^9	N14	N^7	BX14	BX^7
M12	1	NC	-	NC	-	P4	P^2	FX0	FX^0
T15	1	NC	-	NC	-	P6	P^3	FX2	FX^1
-	-	VCC	-	VCC	-	VCC	-	VCC	-
-	-	GND	-	GND	-	GND	-	GND	-
-	1	-	-	GND (Bank 1)	-	GND (Bank 1)	-	GND (Bank 1)	-
P14	-	TMS	-	TMS	-	TMS	-	TMS	-
-	1	VCCO (Bank 1)	-	VCCO (Bank 1)	-	VCCO (Bank 1)	-	VCCO (Bank 1)	-
L12	1	NC	-	NC	-	NC	-	FX4	FX^2
R16	1	NC	-	NC	-	P8	P^4	FX6	FX^3
N14	1	NC	-	NC	-	P10	P^5	FX8	FX^4
P15	1	K14	K^7	K14	K^9	O14	O^7	CX14	CX^7
L11	1	K12	K^6	K12	K^8	O12	O^6	CX12	CX^6
P16	1	K10	K^5	K10	K^7	O10	O^5	CX10	CX^5
K11	1	K8	K^4	K9	K^6	O8	O^4	CX8	CX^4
M14	1	K6	K^3	K8	K^5	O6	O^3	CX6	CX^3
K12	1	K4	K^2	K6	K^4	O4	O^2	CX4	CX^2
N15	1	K2	K^1	K4	K^3	O2	O^1	CX2	CX^1
N16	1	K0	K^0	K2	K^2	O0	O^0	CX0	CX^0
M15	1	NC	-	K1	K^1	BX6	BX^3	HX0	HX^0
M13	1	NC	-	K0	K^0	BX4	BX^2	HX4	HX^1
-	1	-	-	VCCO (Bank 1)	-	VCCO (Bank 1)	-	VCCO (Bank 1)	-
-	1	GND (Bank 1)	-	GND (Bank 1)	-	GND (Bank 1)	-	GND (Bank 1)	-
M16	1	NC	-	NC	-	NC	-	FX10	FX^5
L15	1	NC	-	NC	-	P12	P^6	FX12	FX^6
L16	1	NC	-	NC	-	P14	P^7	FX14	FX^7
J11	1	NC	-	L14	L^9	BX2	BX^1	HX8	HX^2
K15	1	NC	-	L12	L^8	BX0	BX^0	HX12	HX^3
J12	1	L14	L^7	L10	L^7	AX14	AX^7	GX14	GX^7
K13	1	L12	L^6	L9	L^6	AX12	AX^6	GX12	GX^6
K14	1	L10	L^5	L8	L^5	AX10	AX^5	GX10	GX^5
K16	1	L8	L^4	L6	L^4	AX8	AX^4	GX8	GX^4
J16	1	L6	L^3	L4	L^3	AX6	AX^3	GX6	GX^3
J15	1	L4	L^2	L2	L^2	AX4	AX^2	GX4	GX^2
H16	1	L2	L^1	L1	L^1	AX2	AX^1	GX2	GX^1
J13	1	L0	L^0	L0	L^0	AX0	AX^0	GX0	GX^0
-	1	VCCO (Bank 1)	-	VCCO (Bank 1)	-	VCCO (Bank 1)	-	VCCO (Bank 1)	-
-	1	-	-	GND (Bank 1)	-	GND (Bank 1)	-	GND (Bank 1)	-
J14	1	M0	M^0	M0	M^0	DX0	DX^0	JX0	JX^0

Downloaded from Elcodis.com electronic components distributor

ispMACH 4256V/B/C, 4384V/B/C, 4512V/B/C Logic Signal Connections: 256-Ball ftBGA/fpBGA (Cont.)

Ball Number	I/O Bank	ispMACH 4256V/B/C 128-I/O		ispMACH 4256V/B/C 160-I/O		ispMACH 4384V/B/C		ispMACH 4512V/B/C	
		GLB/MC/Pad	ORP	GLB/MC/Pad	ORP	GLB/MC/Pad	ORP	GLB/MC/Pad	ORP
H15	1	M2	M^1	M1	M^1	DX2	DX^1	JX2	JX^1
H14	1	M4	M^2	M2	M^2	DX4	DX^2	JX4	JX^2
H13	1	M6	M^3	M4	M^3	DX6	DX^3	JX6	JX^3
G16	1	M8	M^4	M6	M^4	DX8	DX^4	JX8	JX^4
H12	1	M10	M^5	M8	M^5	DX10	DX^5	JX10	JX^5
G15	1	M12	M^6	M9	M^6	DX12	DX^6	JX12	JX^6
H11	1	M14	M^7	M10	M^7	DX14	DX^7	JX14	JX^7
F16	1	NC	-	M12	M^8	CX0	CX^0	IX0	IX^0
G13	1	NC	-	M14	M^9	CX2	CX^1	IX4	IX^1
G14	1	NC	-	NC	-	EX14	EX^7	KX0	KX^0
F15	1	NC	-	NC	-	EX12	EX^6	KX2	KX^1
E16	1	NC	-	NC	-	NC	-	KX4	KX^2
-	1	GND (Bank 1)	-	GND (Bank 1)	-	GND (Bank 1)	-	GND (Bank 1)	-
-	1	-	-	VCCO (Bank 1)	-	VCCO (Bank 1)	-	VCCO (Bank 1)	-
E15	1	NC	-	NC	-	NC	-	KX6	KX^3
G12	1	NC	-	NC	-	EX10	EX^5	KX8	KX^4
E13	1	NC	-	NC	-	EX8	EX^4	KX10	KX^5
D16	1	NC	-	N0	N^0	CX4	CX^2	IX8	IX^2
E14	1	NC	-	N1	N^1	CX6	CX^3	IX12	IX^3
G11	1	N0	N^0	N2	N^2	FX0	FX^0	NX0	NX^0
D15	1	N2	N^1	N4	N^3	FX2	FX^1	NX2	NX^1
F11	1	N4	N^2	N6	N^4	FX4	FX^2	NX4	NX^2
C16	1	N6	N^3	N8	N^5	FX6	FX^3	NX6	NX^3
F12	1	N8	N^4	N9	N^6	FX8	FX^4	NX8	NX^4
D14	1	N10	N^5	N10	N^7	FX10	FX^5	NX10	NX^5
C15	1	N12	N^6	N12	N^8	FX12	FX^6	NX12	NX^6
B16	1	N14	N^7	N14	N^9	FX14	FX^7	NX14	NX^7
-	1	VCCO (Bank 1)	-	VCCO (Bank 1)	-	VCCO (Bank 1)	-	VCCO (Bank 1)	-
C14	-	TDO	-	TDO	-	TDO	-	TDO	-
-	-	VCC	-	VCC	-	VCC	-	VCC	-
-	-	GND	-	GND	-	GND	-	GND	-
-	1	-	-	GND (Bank 1)	-	GND (Bank 1)	-	GND (Bank 1)	-
A15	1	NC	-	NC	-	EX6	EX^3	KX12	KX^6
B14	1	NC	-	NC	-	EX4	EX^2	KX14	KX^7
E12	1	O14	O^7	O14	O^9	GX14	GX^7	OX14	OX^7
A14	1	O12	O^6	O12	O^8	GX12	GX^6	OX12	OX^6
C13	1	O10	O^5	O10	O^7	GX10	GX^5	OX10	OX^5
D13	1	O8	O^4	O9	O^6	GX8	GX^4	OX8	OX^4
E11	1	O6	O^3	O8	O^5	GX6	GX^3	OX6	OX^3
B13	1	O4	O^2	O6	O^4	GX4	GX^2	OX4	OX^2
F10	1	O2	O^1	O4	O^3	GX2	GX^1	OX2	OX^1

Downloaded from Elcodis.com electronic components distributor

ispMACH 4256V/B/C, 4384V/B/C, 4512V/B/C Logic Signal Connections: 256-Ball ftBGA/fpBGA (Cont.)

Ball Number	I/O Bank	ispMACH 4256V/B/C 128-I/O		ispMACH 4256V/B/C 160-I/O		ispMACH 4384V/B/C		ispMACH 4512V/B/C	
		GLB/MC/Pad	ORP	GLB/MC/Pad	ORP	GLB/MC/Pad	ORP	GLB/MC/Pad	ORP
C12	1	O0	O^0	O2	O^2	GX0	GX^0	OX0	OX^0
E10	1	NC	-	O1	O^1	CX8	CX^4	MX0	MX^0
A13	1	NC	-	O0	O^0	CX10	CX^5	MX4	MX^1
D12	1	NC	-	NC	-	NC	-	LX0	LX^0
-	1	GND (Bank 1)	-	GND (Bank 1)	-	GND (Bank 1)	-	GND (Bank 1)	-
-	1	VCCO (Bank 1)	-	VCCO (Bank 1)	-	VCCO (Bank 1)	-	VCCO (Bank 1)	-
B12	1	NC	-	NC	-	NC	-	LX4	LX^1
A12	1	NC	-	NC	-	EX2	EX^1	LX8	LX^2
B11	1	NC	-	NC	-	EX0	EX^0	LX12	LX^3
A11	1	NC	-	P14	P^9	CX12	CX^6	MX8	MX^2
D10	1	NC	-	P12	P^8	CX14	CX^7	MX12	MX^3
C10	1	P14	P^7	P10	P^7	HX14	HX^7	PX14	PX^7
B10	1	P12	P^6	P9	P6	HX12	HX^6	PX12	PX^6
A10	1	P10	P^5	P8	P^5	HX10	HX^5	PX10	PX^5
A9	1	P8	P^4	P6	P^4	HX8	HX^4	PX8	PX^4
F9	1	P6	P^3	P4	P^3	HX6	HX^3	PX6	PX^3
B9	1	P4	P^2	P2	P^2	HX4	HX^2	PX4	PX^2
E9	1	P2/GOE1	P^1	P1/GOE1	P^1	HX2/GOE1	HX^1	PX2/GOE1	PX^1
C9	1	P0	P^0	P0	P^0	HX0	HX^0	PX0	PX^0
-	-	GND	-	GND		GND	-	GND	-
D9	1	CLK3/I	-	CLK3/I	-	CLK3/I	-	CLK3/I	-
-	0	GND (Bank 0)	-	GND (Bank 0)	-	GND (Bank 0)	-	GND (Bank 0)	-
B8	0	CLK0/I	-	CLK0/I	-	CLK0/I	-	CLK0/I	-
-	-	VCC	-	VCC	-	VCC	-	VCC	-
D8	0	A0	A^0	A0	A^0	A0	A^0	A0	A^0
C8	0	A2/GOE0	A^1	A1/GOE0	A^1	A2/GOE0	A^1	A2/GOE0	A^1
A8	0	A4	A^2	A2	A^2	A4	A^2	A4	A^2
A7	0	A6	A^3	A4	A^3	A6	A^3	A6	A^3
B7	0	A8	A^4	A6	A^4	A8	A^4	A8	A^4
E8	0	A10	A^5	A8	A^5	A10	A^5	A10	A^5
D7	0	A12	A^6	A9	A^6	A12	A^6	A12	A^6
F8	0	A14	A^7	A10	A^7	A14	A^7	A14	A^7
C7	0	NC	-	A12	A^8	F14	F^7	D0	D^0
A6	0	NC	-	A14	A^9	F12	F^6	D4	D^1
B6	0	NC	-	NC	-	D14	D^7	E0	E^0
A5	0	NC	-	NC	-	D12	D^6	E4	E^1
B5	0	NC	-	NC	-	NC	-	E8	E^2
-	0	VCCO (Bank 0)	-	VCCO (Bank 0)	-	VCCO (Bank 0)	-	VCCO (Bank 0)	-
-	0	GND (Bank 0)	-	GND (Bank 0)	-	GND (Bank 0)	-	GND (Bank 0)	-
D5	0	NC	-	NC	-	NC	-	E12	E^3
A4	0	NC	-	B0	B^0	F10	F^5	D8	D^2

Downloaded from Elcodis.com electronic components distributor

ispMACH 4256V/B/C, 4384V/B/C, 4512V/B/C Logic Signal Connections: 256-Ball ftBGA/fpBGA (Cont.)

Ball Number	I/O Bank	ispMACH 4256V/B/C 128-I/O		ispMACH 4256V/B/C 160-I/O		ispMACH 4384V/B/C		ispMACH 4512V/B/C	
		GLB/MC/Pad	ORP	GLB/MC/Pad	ORP	GLB/MC/Pad	ORP	GLB/MC/Pad	ORP
E7	0	NC	-	B1	B^1	F8	F^4	D12	D^3
A3	0	B0	B^0	B2	B^2	B0	B^0	B0	B^0
F7	0	B2	B^1	B4	B^3	B2	B^1	B2	B^1
B4	0	B4	B^2	B6	B^4	B4	B^2	B4	B^2
C5	0	B6	B^3	B8	B^5	B6	B^3	B6	B^3
A2	0	B8	B^4	B9	B^6	B8	B^4	B8	B^4
E6	0	B10	B^5	B10	B^7	B10	B^5	B10	B^5
B3	0	B12	B^6	B12	B^8	B12	B^6	B12	B^6
C4	0	B14	B^7	B14	B^9	B14	B^7	B14	B^7
D4	0	NC	-	NC	-	D10	D^5	F0	F^0
E5	0	NC	-	NC	-	D8	D^4	F2	F^1
-	-	VCC	-	VCC	-	VCC	-	VCC	-
-	-	-	-	-	-	GND	-	GND	-
-	0	-	-	-	-	GND (Bank 0)	-	GND (Bank 0)	-

Note: VCC, VCCO and GND are tied together to their respective common signal on the package substrate. See Power Supply and NC Connections table for VCC/ VCCO/GND pin definitions.

Downloaded from Elcodis.com electronic components distributor

Part Number Description

LC XXXX X X – XX XX XXX X X XX

Device Family

Device Number
4032 = 32 Macrocells
4064 = 64 Macrocells
4128 = 128 Macrocells
4256 = 256 Macrocells
4384 = 384 Macrocells
4512 = 512 Macrocells

Power
Z = Zero Power
Blank = Low Power

Supply Voltage
V = 3.3V
B = 2.5V
C = 1.8V

Speed
25 = 2.5ns
27 = 2.7ns
3 = 3.0ns
35 = 3.5ns
37 = 3.7ns
42 = 4.2ns
45 = 4.5ns
5 = 5.0ns
75 = 7.5ns
10 = 10.0ns

Production Status
Blank = Final production
ES = Engineering Samples

Operating Temperature Range
C = Commercial
I = Industrial
E = Extended[1]

I/O Designator (if applicable)
A = 128 I/Os
B = 160 I/Os

Pin/Ball Count
44 (1.0mm thickness)
48 (1.0mm thickness)
56
100
128
132
144
176
256

Package

T = TQFP	TN = Lead-free TQFP
FT = ftBGA	FTN= Lead-free ftBGA
F = fpBGA[2]	FN = Lead-free fpBGA[2]
M = csBGA	MN = Lead-free csBGA

1. For automotive AEC-Q100 compliant devices, refer to the LA-ispMACH 4000V/Z Automotive Family Data Sheet (DS1017).
2. Use ftBGA package. fpBGA package devices have been discontinued via PCN#14A-07.

ispMACH 4000 Family Speed Grade Offering

	-25	-27	-3	-35	-37	-42	-45	-5		-75			-10
	Com	Com	Com	Com	Com	Com	Com	Com	Ind	Com	Ind	Ext	Ind
ispMACH 4032V/B/C												[1]	
ispMACH 4064V/B/C												[1]	
ispMACH 4128V/B/C												[1]	
ispMACH 4256V/B/C													
ispMACH 4384V/B/C													
ispMACH 4512V/B/C													
ispMACH 4032ZC												[1]	
ispMACH 4064ZC												[1]	
ispMACH 4128ZC												[1]	
ispMACH 4256ZC													

1. 3.3V only.

Downloaded from Elcodis.com electronic components distributor

Ordering Information

Note: ispMACH 4000 devices are all dual marked except the slowest commercial speed grade ispMACH 4000Z devices. For example, the commercial speed grade LC4128C-5T100C is also marked with the industrial grade -75I. The commercial grade is always one speed grade faster than the associated dual mark industrial grade. The slowest commercial speed grade ispMACH 4000Z devices are marked as commercial grade only.

Conventional Packaging

ispMACH 4000ZC (Zero Power, 1.8V) Commercial Devices

Device	Part Number	Macrocells	Voltage	t_{PD}	Package	Pin/Ball Count	I/O	Grade
LC4032ZC	LC4032ZC-35M56C	32	1.8	3.5	csBGA	56	32	C
	LC4032ZC-5M56C	32	1.8	5	csBGA	56	32	C
	LC4032ZC-75M56C	32	1.8	7.5	csBGA	56	32	C
	LC4032ZC-35T48C	32	1.8	3.5	TQFP	48	32	C
	LC4032ZC-5T48C	32	1.8	5	TQFP	48	32	C
	LC4032ZC-75T48C	32	1.8	7.5	TQFP	48	32	C
LC4064ZC	LC4064ZC-37M132C	64	1.8	3.7	csBGA	132	64	C
	LC4064ZC-5M132C	64	1.8	5	csBGA	132	64	C
	LC4064ZC-75M132C	64	1.8	7.5	csBGA	132	64	C
	LC4064ZC-37T100C	64	1.8	3.7	TQFP	100	64	C
	LC4064ZC-5T100C	64	1.8	5	TQFP	100	64	C
	LC4064ZC-75T100C	64	1.8	7.5	TQFP	100	64	C
	LC4064ZC-37M56C	64	1.8	3.7	csBGA	56	32	C
	LC4064ZC-5M56C	64	1.8	5	csBGA	56	32	C
	LC4064ZC-75M56C	64	1.8	7.5	csBGA	56	32	C
	LC4064ZC-37T48C	64	1.8	3.7	TQFP	48	32	C
	LC4064ZC-5T48C	64	1.8	5	TQFP	48	32	C
	LC4064ZC-75T48C	64	1.8	7.5	TQFP	48	32	C
LC4128ZC	LC4128ZC-42M132C	128	1.8	4.2	csBGA	132	96	C
	LC4128ZC-75M132C	128	1.8	7.5	csBGA	132	96	C
	LC4128ZC-42T100C	128	1.8	4.2	TQFP	100	64	C
	LC4128ZC-75T100C	128	1.8	7.5	TQFP	100	64	C
LC4256ZC	LC4256ZC-45T176C	256	1.8	4.5	TQFP	176	128	C
	LC4256ZC-75T176C	256	1.8	7.5	TQFP	176	128	C
	LC4256ZC-45M132C	256	1.8	4.5	csBGA	132	96	C
	LC4256ZC-75M132C	256	1.8	7.5	csBGA	132	96	C
	LC4256ZC-45T100C	256	1.8	4.5	TQFP	100	64	C
	LC4256ZC-75T100C	256	1.8	7.5	TQFP	100	64	C

ispMACH 4000ZC (1.8V, Zero Power) Industrial Devices

Device	Part Number	Macrocells	Voltage	tPD	Package	Pin/Ball Count	I/O	Grade
LC4032ZC	LC4032ZC-5M56I	32	1.8	5	csBGA	56	32	I
	LC4032ZC-75M56I	32	1.8	7.5	csBGA	56	32	I
	LC4032ZC-5T48I	32	1.8	5	TQFP	48	32	I
	LC4032ZC-75T48I	32	1.8	7.5	TQFP	48	32	I

Downloaded from Elcodis.com electronic components distributor

ispMACH 4000ZC (1.8V, Zero Power) Industrial Devices (Cont.)

Device	Part Number	Macrocells	Voltage	tPD	Package	Pin/Ball Count	I/O	Grade
LC4064ZC	LC4064ZC-5M132I	64	1.8	5	csBGA	132	64	I
	LC4064ZC-75M132I	64	1.8	7.5	csBGA	132	64	I
	LC4064ZC-5T100I	64	1.8	5	TQFP	100	64	I
	LC4064ZC-75T100I	64	1.8	7.5	TQFP	100	64	I
	LC4064ZC-5M56I	64	1.8	5	csBGA	56	34	I
	LC4064ZC-75M56I	64	1.8	7.5	csBGA	56	34	I
	LC4064ZC-5T48I	64	1.8	5	TQFP	48	32	I
	LC4064ZC-75T48I	64	1.8	7.5	TQFP	48	32	I
LC4128ZC	LC4128ZC-75M132I	128	1.8	7.5	csBGA	132	96	I
	LC4128ZC-75T100I	128	1.8	7.5	TQFP	100	64	I
LC4256ZC	LC4256ZC-75T176I	256	1.8	7.5	TQFP	176	128	I
	LC4256ZC-75M132I	256	1.8	7.5	csBGA	132	96	I
	LC4256ZC-75T100I	256	1.8	7.5	TQFP	100	64	I

ispMACH 4000ZC (1.8V, Zero Power) Extended Temperature Devices

Family	Part Number	Macrocells	Voltage	t_{PD}	Package	Pin/Ball Count	I/O	Grade
LC4032ZC	LC4032ZC-75T48E	32	1.8	7.5	TQFP	48	32	E
LC4064ZC	LC4064ZC-75T100E	64	1.8	7.5	TQFP	100	64	E
	LC4064ZC-75T48E	64	1.8	7.5	TQFP	48	32	E
LC4128ZC	LC4128ZC-75T100E	128	1.8	7.5	TQFP	100	64	E
LC4256ZC	LC4256ZC-75T176E	256	1.8	7.5	TQFP	176	128	E
	LC4256ZC-75T100E	256	1.8	7.5	TQFP	100	64	E

ispMACH 4000C (1.8V) Commercial Devices

Device	Part Number	Macrocells	Voltage	t_{PD}	Package	Pin/Ball Count	I/O	Grade
LC4032C	LC4032C-25T48C	32	1.8	2.5	TQFP	48	32	C
	LC4032C-5T48C	32	1.8	5	TQFP	48	32	C
	LC4032C-75T48C	32	1.8	7.5	TQFP	48	32	C
	LC4032C-25T44C	32	1.8	2.5	TQFP	44	30	C
	LC4032C-5T44C	32	1.8	5	TQFP	44	30	C
	LC4032C-75T44C	32	1.8	7.5	TQFP	44	30	C
LC4064C	LC4064C-25T100C	64	1.8	2.5	TQFP	100	64	C
	LC4064C-5T100C	64	1.8	5	TQFP	100	64	C
	LC4064C-75T100C	64	1.8	7.5	TQFP	100	64	C
	LC4064C-25T48C	64	1.8	2.5	TQFP	48	32	C
	LC4064C-5T48C	64	1.8	5	TQFP	48	32	C
	LC4064C-75T48C	64	1.8	7.5	TQFP	48	32	C
	LC4064C-25T44C	64	1.8	2.5	TQFP	44	30	C
	LC4064C-5T44C	64	1.8	5	TQFP	44	30	C
	LC4064C-75T44C	64	1.8	7.5	TQFP	44	30	C

Downloaded from Elcodis.com electronic components distributor

ispMACH 4000C (1.8V) Commercial Devices (Cont.)

Device	Part Number	Macrocells	Voltage	t_{PD}	Package	Pin/Ball Count	I/O	Grade
LC4128C	LC4128C-27T128C	128	1.8	2.7	TQFP	128	92	C
	LC4128C-5T128C	128	1.8	5	TQFP	128	92	C
	LC4128C-75T128C	128	1.8	7.5	TQFP	128	92	C
	LC4128C-27T100C	128	1.8	2.7	TQFP	100	64	C
	LC4128C-5T100C	128	1.8	5	TQFP	100	64	C
	LC4128C-75T100C	128	1.8	7.5	TQFP	100	64	C
LC4256C	LC4256C-3FT256AC	256	1.8	3	ftBGA	256	128	C
	LC4256C-5FT256AC	256	1.8	5	ftBGA	256	128	C
	LC4256C-75FT256AC	256	1.8	7.5	ftBGA	256	128	C
	LC4256C-3FT256BC	256	1.8	3	ftBGA	256	160	C
	LC4256C-5FT256BC	256	1.8	5	ftBGA	256	160	C
	LC4256C-75FT256BC	256	1.8	7.5	ftBGA	256	160	C
	LC4256C-3F256AC[1]	256	1.8	3	fpBGA	256	128	C
	LC4256C-5F256AC[1]	256	1.8	5	fpBGA	256	128	C
	LC4256C-75F256AC[1]	256	1.8	7.5	fpBGA	256	128	C
	LC4256C-3F256BC[1]	256	1.8	3	fpBGA	256	160	C
	LC4256C-5F256BC[1]	256	1.8	5	fpBGA	256	160	C
	LC4256C-75F256BC[1]	256	1.8	7.5	fpBGA	256	160	C
	LC4256C-3T176C	256	1.8	3	TQFP	176	128	C
	LC4256C-5T176C	256	1.8	5	TQFP	176	128	C
	LC4256C-75T176C	256	1.8	7.5	TQFP	176	128	C
	LC4256C-3T100C	256	1.8	3	TQFP	100	64	C
	LC4256C-5T100C	256	1.8	5	TQFP	100	64	C
	LC4256C-75T100C	256	1.8	7.5	TQFP	100	64	C
LC4384C	LC4384C-35FT256C	384	1.8	3.5	ftBGA	256	192	C
	LC4384C-5FT256C	384	1.8	5	ftBGA	256	192	C
	LC4384C-75FT256C	384	1.8	7.5	ftBGA	256	192	C
	LC4384C-35F256C[1]	384	1.8	3.5	fpBGA	256	192	C
	LC4384C-5F256C[1]	384	1.8	5	fpBGA	256	192	C
	LC4384C-75F256C[1]	384	1.8	7.5	fpBGA	256	192	C
	LC4384C-35T176C	384	1.8	3.5	TQFP	176	128	C
	LC4384C-5T176C	384	1.8	5	TQFP	176	128	C
	LC4384C-75T176C	384	1.8	7.5	TQFP	176	128	C
LC4512C	LC4512C-35FT256C	512	1.8	3.5	ftBGA	256	208	C
	LC4512C-5FT256C	512	1.8	5	ftBGA	256	208	C
	LC4512C-75FT256C	512	1.8	7.5	ftBGA	256	208	C
	LC4512C-35F256C[1]	512	1.8	3.5	fpBGA	256	208	C
	LC4512C-5F256C[1]	512	1.8	5	fpBGA	256	208	C
	LC4512C-75F256C[1]	512	1.8	7.5	fpBGA	256	208	C
	LC4512C-35T176C	512	1.8	3.5	TQFP	176	128	C
	LC4512C-5T176C	512	1.8	5	TQFP	176	128	C
	LC4512C-75T176C	512	1.8	7.5	TQFP	176	128	C

1. Use ftBGA package. fpBGA package devices have been discontinued via PCN#14A-07.

Downloaded from Elcodis.com electronic components distributor

ispMACH 4000C (1.8V) Industrial Devices

Family	Part Number	Macrocells	Voltage	t_{PD}	Package	Pin/Ball Count	I/O	Grade
LC4032C	LC4032C-5T48I	32	1.8	5	TQFP	48	32	I
	LC4032C-75T48I	32	1.8	7.5	TQFP	48	32	I
	LC4032C-10T48I	32	1.8	10	TQFP	48	32	I
	LC4032C-5T44I	32	1.8	5	TQFP	44	30	I
	LC4032C-75T44I	32	1.8	7.5	TQFP	44	30	I
	LC4032C-10T44I	32	1.8	10	TQFP	44	30	I
LC4064C	LC4064C-5T100I	64	1.8	5	TQFP	100	64	I
	LC4064C-75T100I	64	1.8	7.5	TQFP	100	64	I
	LC4064C-10T100I	64	1.8	10	TQFP	100	64	I
	LC4064C-5T48I	64	1.8	5	TQFP	48	32	I
	LC4064C-75T48I	64	1.8	7.5	TQFP	48	32	I
	LC4064C-10T48I	64	1.8	10	TQFP	48	32	I
	LC4064C-5T44I	64	1.8	5	TQFP	44	30	I
	LC4064C-75T44I	64	1.8	7.5	TQFP	44	30	I
	LC4064C-10T44I	64	1.8	10	TQFP	44	30	I
LC4128C	LC4128C-5T128I	128	1.8	5	TQFP	128	92	I
	LC4128C-75T128I	128	1.8	7.5	TQFP	128	92	I
	LC4128C-10T128I	128	1.8	10	TQFP	128	92	I
	LC4128C-5T100I	128	1.8	5	TQFP	100	64	I
	LC4128C-75T100I	128	1.8	7.5	TQFP	100	64	I
	LC4128C-10T100I	128	1.8	10	TQFP	100	64	I
LC4256C	LC4256C-5FT256AI	256	1.8	5	ftBGA	256	128	I
	LC4256C-75FT256AI	256	1.8	7.5	ftBGA	256	128	I
	LC4256C-10FT256AI	256	1.8	10	ftBGA	256	128	I
	LC4256C-5FT256BI	256	1.8	5	ftBGA	256	160	I
	LC4256C-75FT256BI	256	1.8	7.5	ftBGA	256	160	I
	LC4256C-10FT256BI	256	1.8	10	ftBGA	256	160	I
	LC4256C-5F256AI[1]	256	1.8	5	fpBGA	256	128	I
	LC4256C-75F256AI[1]	256	1.8	7.5	fpBGA	256	128	I
	LC4256C-10F256AI[1]	256	1.8	10	fpBGA	256	128	I
	LC4256C-5F256BI[1]	256	1.8	5	fpBGA	256	160	I
	LC4256C-75F256BI[1]	256	1.8	7.5	fpBGA	256	160	I
	LC4256C-10F256BI[1]	256	1.8	10	fpBGA	256	160	I
	LC4256C-5T176I	256	1.8	5	TQFP	176	128	I
	LC4256C-75T176I	256	1.8	7.5	TQFP	176	128	I
	LC4256C-10T176I	256	1.8	10	TQFP	176	128	I
	LC4256C-5T100I	256	1.8	5	TQFP	100	64	I
	LC4256C-75T100I	256	1.8	7.5	TQFP	100	64	I
	LC4256C-10T100I	256	1.8	10	TQFP	100	64	I

Downloaded from Elcodis.com electronic components distributor

ispMACH 4000C (1.8V) Industrial Devices (Cont.)

Family	Part Number	Macrocells	Voltage	t_{PD}	Package	Pin/Ball Count	I/O	Grade
LC4384C	LC4384C-5FT256I	384	1.8	5	ftBGA	256	192	I
	LC4384C-75FT256I	384	1.8	7.5	ftBGA	256	192	I
	LC4384C-10FT256I	384	1.8	10	ftBGA	256	192	I
	LC4384C-5F256I[1]	384	1.8	5	fpBGA	256	192	I
	LC4384C-75F256I[1]	384	1.8	7.5	fpBGA	256	192	I
	LC4384C-10F256I[1]	384	1.8	10	fpBGA	256	192	I
	LC4384C-5T176I	384	1.8	5	TQFP	176	128	I
	LC4384C-75T176I	384	1.8	7.5	TQFP	176	128	I
	LC4384C-10T176I	384	1.8	10	TQFP	176	128	I
LC4512C	LC4512C-5FT256I	512	1.8	5	ftBGA	256	208	I
	LC4512C-75FT256I	512	1.8	7.5	ftBGA	256	208	I
	LC4512C-10FT256I	512	1.8	10	ftBGA	256	208	I
	LC4512C-5F256I[1]	512	1.8	5	fpBGA	256	208	I
	LC4512C-75F256I[1]	512	1.8	7.5	fpBGA	256	208	I
	LC4512C-10F256I[1]	512	1.8	10	fpBGA	256	208	I
	LC4512C-5T176I	512	1.8	5	TQFP	176	128	I
	LC4512C-75T176I	512	1.8	7.5	TQFP	176	128	I
	LC4512C-10T176I	512	1.8	10	TQFP	176	128	I

1. Use ftBGA package. fpBGA package devices have been discontinued via PCN#14A-07.

ispMACH 4000B (2.5V) Commercial Devices

Device	Part Number	Macrocells	Voltage	t_{PD}	Package	Pin/Ball Count	I/O	Grade
LC4032B	LC4032B-25T48C	32	2.5	2.5	TQFP	48	32	C
	LC4032B-5T48C	32	2.5	5	TQFP	48	32	C
	LC4032B-75T48C	32	2.5	7.5	TQFP	48	32	C
	LC4032B-25T44C	32	2.5	2.5	TQFP	44	30	C
	LC4032B-5T44C	32	2.5	5	TQFP	44	30	C
	LC4032B-75T44C	32	2.5	7.5	TQFP	44	30	C
LC4064B	LC4064B-25T100C	64	2.5	2.5	TQFP	100	64	C
	LC4064B-5T100C	64	2.5	5	TQFP	100	64	C
	LC4064B-75T100C	64	2.5	7.5	TQFP	100	64	C
	LC4064B-25T48C	64	2.5	2.5	TQFP	48	32	C
	LC4064B-5T48C	64	2.5	5	TQFP	48	32	C
	LC4064B-75T48C	64	2.5	7.5	TQFP	48	32	C
	LC4064B-25T44C	64	2.5	2.5	TQFP	44	30	C
	LC4064B-5T44C	64	2.5	5	TQFP	44	30	C
	LC4064B-75T44C	64	2.5	7.5	TQFP	44	30	C
LC4128B	LC4128B-27T128C	128	2.5	2.7	TQFP	128	92	C
	LC4128B-5T128C	128	2.5	5	TQFP	128	92	C
	LC4128B-75T128C	128	2.5	7.5	TQFP	128	92	C
	LC4128B-27T100C	128	2.5	2.7	TQFP	100	64	C
	LC4128B-5T100C	128	2.5	5	TQFP	100	64	C
	LC4128B-75T100C	128	2.5	7.5	TQFP	100	64	C

Downloaded from Elcodis.com electronic components distributor

ispMACH 4000B (2.5V) Commercial Devices (Cont.)

Device	Part Number	Macrocells	Voltage	t_{PD}	Package	Pin/Ball Count	I/O	Grade
LC4256B	LC4256B-3FT256AC	256	2.5	3	ftBGA	256	128	C
	LC4256B-5FT256AC	256	2.5	5	ftBGA	256	128	C
	LC4256B-75FT256AC	256	2.5	7.5	ftBGA	256	128	C
	LC4256B-3FT256BC	256	2.5	3	ftBGA	256	160	C
	LC4256B-5FT256BC	256	2.5	5	ftBGA	256	160	C
	LC4256B-75FT256BC	256	2.5	7.5	ftBGA	256	160	C
	LC4256B-3F256AC[1]	256	2.5	3	fpBGA	256	128	C
	LC4256B-5F256AC[1]	256	2.5	5	fpBGA	256	128	C
	LC4256B-75F256AC[1]	256	2.5	7.5	fpBGA	256	128	C
	LC4256B-3F256BC[1]	256	2.5	3	fpBGA	256	160	C
	LC4256B-5F256BC[1]	256	2.5	5	fpBGA	256	160	C
	LC4256B-75F256BC[1]	256	2.5	7.5	fpBGA	256	160	C
	LC4256B-3T176C	256	2.5	3	TQFP	176	128	C
	LC4256B-5T176C	256	2.5	5	TQFP	176	128	C
	LC4256B-75T176C	256	2.5	7.5	TQFP	176	128	C
	LC4256B-3T100C	256	2.5	3	TQFP	100	64	C
	LC4256B-5T100C	256	2.5	5	TQFP	100	64	C
	LC4256B-75T100C	256	2.5	7.5	TQFP	100	64	C
LC4384B	LC4384B-35FT256C	384	2.5	3.5	ftBGA	256	192	C
	LC4384B-5FT256C	384	2.5	5	ftBGA	256	192	C
	LC4384B-75FT256C	384	2.5	7.5	ftBGA	256	192	C
	LC4384B-35F256C[1]	384	2.5	3.5	fpBGA	256	192	C
	LC4384B-5F256C[1]	384	2.5	5	fpBGA	256	192	C
	LC4384B-75F256C[1]	384	2.5	7.5	fpBGA	256	192	C
	LC4384B-35T176C	384	2.5	3.5	TQFP	176	128	C
	LC4384B-5T176C	384	2.5	5	TQFP	176	128	C
	LC4384B-75T176C	384	2.5	7.5	TQFP	176	128	C
LC4512B	LC4512B-35FT256C	512	2.5	3.5	ftBGA	256	208	C
	LC4512B-5FT256C	512	2.5	5	ftBGA	256	208	C
	LC4512B-75FT256C	512	2.5	7.5	ftBGA	256	208	C
	LC4512B-35F256C[1]	512	2.5	3.5	fpBGA	256	208	C
	LC4512B-5F256C[1]	512	2.5	5	fpBGA	256	208	C
	LC4512B-75F256C[1]	512	2.5	7.5	fpBGA	256	208	C
	LC4512B-35T176C	512	2.5	3.5	TQFP	176	128	C
	LC4512B-5T176C	512	2.5	5	TQFP	176	128	C
	LC4512B-75T176C	512	2.5	7.5	TQFP	176	128	C

1. Use ftBGA package. fpBGA package devices have been discontinued via PCN#14A-07.

Downloaded from Elcodis.com electronic components distributor

ispMACH 4000B (2.5V) Industrial Devices

Family	Part Number	Macrocells	Voltage	t_{PD}	Package	Pin/Ball Count	I/O	Grade
LC4032B	LC4032B-5T48I	32	2.5	5	TQFP	48	32	I
	LC4032B-75T48I	32	2.5	7.5	TQFP	48	32	I
	LC4032B-10T48I	32	2.5	10	TQFP	48	32	I
	LC4032B-5T44I	32	2.5	5	TQFP	44	30	I
	LC4032B-75T44I	32	2.5	7.5	TQFP	44	30	I
	LC4032B-10T44I	32	2.5	10	TQFP	44	30	I
LC4064B	LC4064B-5T100I	64	2.5	5	TQFP	100	64	I
	LC4064B-75T100I	64	2.5	7.5	TQFP	100	64	I
	LC4064B-10T100I	64	2.5	10	TQFP	100	64	I
	LC4064B-5T48I	64	2.5	5	TQFP	48	32	I
	LC4064B-75T48I	64	2.5	7.5	TQFP	48	32	I
	LC4064B-10T48I	64	2.5	10	TQFP	48	32	I
	LC4064B-5T44I	64	2.5	5	TQFP	44	30	I
	LC4064B-75T44I	64	2.5	7.5	TQFP	44	30	I
	LC4064B-10T44I	64	2.5	10	TQFP	44	30	I
LC4128B	LC4128B-5T128I	128	2.5	5	TQFP	128	92	I
	LC4128B-75T128I	128	2.5	7.5	TQFP	128	92	I
	LC4128B-10T128I	128	2.5	10	TQFP	128	92	I
	LC4128B-5T100I	128	2.5	5	TQFP	100	64	I
	LC4128B-75T100I	128	2.5	7.5	TQFP	100	64	I
	LC4128B-10T100I	128	2.5	10	TQFP	100	64	I
LC4256B	LC4256B-5FT256AI	256	2.5	5	ftBGA	256	128	I
	LC4256B-75FT256AI	256	2.5	7.5	ftBGA	256	128	I
	LC4256B-10FT256AI	256	2.5	10	ftBGA	256	128	I
	LC4256B-5FT256BI	256	2.5	5	ftBGA	256	160	I
	LC4256B-75FT256BI	256	2.5	7.5	ftBGA	256	160	I
	LC4256B-10FT256BI	256	2.5	10	ftBGA	256	160	I
	LC4256B-5F256AI[1]	256	2.5	5	fpBGA	256	128	I
	LC4256B-75F256AI[1]	256	2.5	7.5	fpBGA	256	128	I
	LC4256B-10F256AI[1]	256	2.5	10	fpBGA	256	128	I
	LC4256B-5F256BI[1]	256	2.5	5	fpBGA	256	160	I
	LC4256B-75F256BI[1]	256	2.5	7.5	fpBGA	256	160	I
	LC4256B-10F256BI[1]	256	2.5	10	fpBGA	256	160	I
	LC4256B-5T176I	256	2.5	5	TQFP	176	128	I
	LC4256B-75T176I	256	2.5	7.5	TQFP	176	128	I
	LC4256B-10T176I	256	2.5	10	TQFP	176	128	I
	LC4256B-5T100I	256	2.5	5	TQFP	100	64	I
	LC4256B-75T100I	256	2.5	7.5	TQFP	100	64	I
	LC4256B-10T100I	256	2.5	10	TQFP	100	64	I

Downloaded from Elcodis.com electronic components distributor

ispMACH 4000B (2.5V) Industrial Devices (Cont.)

Family	Part Number	Macrocells	Voltage	t_{PD}	Package	Pin/Ball Count	I/O	Grade
LC4384B	LC4384B-5FT256I	384	2.5	5	ftBGA	256	192	I
	LC4384B-75FT256I	384	2.5	7.5	ftBGA	256	192	I
	LC4384B-10FT256I	384	2.5	10	ftBGA	256	192	I
	LC4384B-5F256I[1]	384	2.5	5	fpBGA	256	192	I
	LC4384B-75F256I[1]	384	2.5	7.5	fpBGA	256	192	I
	LC4384B-10F256I[1]	384	2.5	10	fpBGA	256	192	I
	LC4384B-5T176I	384	2.5	5	TQFP	176	128	I
	LC4384B-75T176I	384	2.5	7.5	TQFP	176	128	I
	LC4384B-10T176I	384	2.5	10	TQFP	176	128	I
LC4512B	LC4512B-5FT256I	512	2.5	5	ftBGA	256	208	I
	LC4512B-75FT256I	512	2.5	7.5	ftBGA	256	208	I
	LC4512B-10FT256I	512	2.5	10	ftBGA	256	208	I
	LC4512B-5F256I[1]	512	2.5	5	fpBGA	256	208	I
	LC4512B-75F256I[1]	512	2.5	7.5	fpBGA	256	208	I
	LC4512B-10F256I[1]	512	2.5	10	fpBGA	256	208	I
	LC4512B-5T176I	512	2.5	5	TQFP	176	128	I
	LC4512B-75T176I	512	2.5	7.5	TQFP	176	128	I
	LC4512B-10T176I	512	2.5	10	TQFP	176	128	I

1. Use ftBGA package. fpBGA package devices have been discontinued via PCN#14A-07.

ispMACH 4000V (3.3V) Commercial Devices

Device	Part Number	Macrocells	Voltage	t_{PD}	Package	Pin/Ball Count	I/O	Grade
LC4032V	LC4032V-25T48C	32	3.3	2.5	TQFP	48	32	C
	LC4032V-5T48C	32	3.3	5	TQFP	48	32	C
	LC4032V-75T48C	32	3.3	7.5	TQFP	48	32	C
	LC4032V-25T44C	32	3.3	2.5	TQFP	44	30	C
	LC4032V-5T44C	32	3.3	5	TQFP	44	30	C
	LC4032V-75T44C	32	3.3	7.5	TQFP	44	30	C
LC4064V	LC4064V-25T100C	64	3.3	2.5	TQFP	100	64	C
	LC4064V-5T100C	64	3.3	5	TQFP	100	64	C
	LC4064V-75T100C	64	3.3	7.5	TQFP	100	64	C
	LC4064V-25T48C	64	3.3	2.5	TQFP	48	32	C
	LC4064V-5T48C	64	3.3	5	TQFP	48	32	C
	LC4064V-75T48C	64	3.3	7.5	TQFP	48	32	C
	LC4064V-25T44C	64	3.3	2.5	TQFP	44	30	C
	LC4064V-5T44C	64	3.3	5	TQFP	44	30	C
	LC4064V-75T44C	64	3.3	7.5	TQFP	44	30	C

Downloaded from Elcodis.com electronic components distributor

ispMACH 4000V (3.3V) Commercial Devices (Cont.)

Device	Part Number	Macrocells	Voltage	t_{PD}	Package	Pin/Ball Count	I/O	Grade
LC4128V	LC4128V-27T144C	128	3.3	2.7	TQFP	144	96	C
	LC4128V-5T144C	128	3.3	5	TQFP	144	96	C
	LC4128V-75T144C	128	3.3	7.5	TQFP	144	96	C
	LC4128V-27T128C	128	3.3	2.7	TQFP	128	92	C
	LC4128V-5T128C	128	3.3	5	TQFP	128	92	C
	LC4128V-75T128C	128	3.3	7.5	TQFP	128	92	C
	LC4128V-27T100C	128	3.3	2.7	TQFP	100	64	C
	LC4128V-5T100C	128	3.3	5	TQFP	100	64	C
	LC4128V-75T100C	128	3.3	7.5	TQFP	100	64	C
LC4256V	LC4256V-3FT256AC	256	3.3	3	ftBGA	256	128	C
	LC4256V-5FT256AC	256	3.3	5	ftBGA	256	128	C
	LC4256V-75FT256AC	256	3.3	7.5	ftBGA	256	128	C
	LC4256V-3FT256BC	256	3.3	3	ftBGA	256	160	C
	LC4256V-5FT256BC	256	3.3	5	ftBGA	256	160	C
	LC4256V-75FT256BC	256	3.3	7.5	ftBGA	256	160	C
	LC4256V-3F256AC[1]	256	3.3	3	fpBGA	256	128	C
	LC4256V-5F256AC[1]	256	3.3	5	fpBGA	256	128	C
	LC4256V-75F256AC[1]	256	3.3	7.5	fpBGA	256	128	C
	LC4256V-3F256BC[1]	256	3.3	3	fpBGA	256	160	C
	LC4256V-5F256BC[1]	256	3.3	5	fpBGA	256	160	C
	LC4256V-75F256BC[1]	256	3.3	7.5	fpBGA	256	160	C
	LC4256V-3T176C	256	3.3	3	TQFP	176	128	C
	LC4256V-5T176C	256	3.3	5	TQFP	176	128	C
	LC4256V-75T176C	256	3.3	7.5	TQFP	176	128	C
	LC4256V-3T144C	256	3.3	3	TQFP	144	96	C
	LC4256V-5T144C	256	3.3	5	TQFP	144	96	C
	LC4256V-75T144C	256	3.3	7.5	TQFP	144	96	C
	LC4256V-3T100C	256	3.3	3	TQFP	100	64	C
	LC4256V-5T100C	256	3.3	5	TQFP	100	64	C
	LC4256V-75T100C	256	3.3	7.5	TQFP	100	64	C
LC4384V	LC4384V-35FT256C	384	3.3	3.5	ftBGA	256	192	C
	LC4384V-5FT256C	384	3.3	5	ftBGA	256	192	C
	LC4384V-75FT256C	384	3.3	7.5	ftBGA	256	192	C
	LC4384V-35F256C[1]	384	3.3	3.5	fpBGA	256	192	C
	LC4384V-5F256C[1]	384	3.3	5	fpBGA	256	192	C
	LC4384V-75F256C[1]	384	3.3	7.5	fpBGA	256	192	C
	LC4384V-35T176C	384	3.3	3.5	TQFP	176	128	C
	LC4384V-5T176C	384	3.3	5	TQFP	176	128	C
	LC4384V-75T176C	384	3.3	7.5	TQFP	176	128	C

Downloaded from Elcodis.com electronic components distributor

ispMACH 4000V (3.3V) Commercial Devices (Cont.)

Device	Part Number	Macrocells	Voltage	t_{PD}	Package	Pin/Ball Count	I/O	Grade
LC4512V	LC4512V-35FT256C	512	3.3	3.5	ftBGA	256	208	C
	LC4512V-5FT256C	512	3.3	5	ftBGA	256	208	C
	LC4512V-75FT256C	512	3.3	7.5	ftBGA	256	208	C
	LC4512V-35F256C[1]	512	3.3	3.5	fpBGA	256	208	C
	LC4512V-5F256C[1]	512	3.3	5	fpBGA	256	208	C
	LC4512V-75F256C[1]	512	3.3	7.5	fpBGA	256	208	C
	LC4512V-35T176C	512	3.3	3.5	TQFP	176	128	C
	LC4512V-5T176C	512	3.3	5	TQFP	176	128	C
	LC4512V-75T176C	512	3.3	7.5	TQFP	176	128	C

1. Use ftBGA package. fpBGA package devices have been discontinued via PCN#14A-07.

ispMACH 4000V (3.3V) Industrial Devices

Family	Part Number	Macrocells	Voltage	t_{PD}	Package	Pin/Ball Count	I/O	Grade
LC4032V	LC4032V-5T48I	32	3.3	5	TQFP	48	32	I
	LC4032V-75T48I	32	3.3	7.5	TQFP	48	32	I
	LC4032V-10T48I	32	3.3	10	TQFP	48	32	I
	LC4032V-5T44I	32	3.3	5	TQFP	44	30	I
	LC4032V-75T44I	32	3.3	7.5	TQFP	44	30	I
	LC4032V-10T44I	32	3.3	10	TQFP	44	30	I
LC4064V	LC4064V-5T100I	64	3.3	5	TQFP	100	64	I
	LC4064V-75T100I	64	3.3	7.5	TQFP	100	64	I
	LC4064V-10T100I	64	3.3	10	TQFP	100	64	I
	LC4064V-5T48I	64	3.3	5	TQFP	48	32	I
	LC4064V-75T48I	64	3.3	7.5	TQFP	48	32	I
	LC4064V-10T48I	64	3.3	10	TQFP	48	32	I
	LC4064V-5T44I	64	3.3	5	TQFP	44	30	I
	LC4064V-75T44I	64	3.3	7.5	TQFP	44	30	I
	LC4064V-10T44I	64	3.3	10	TQFP	44	30	I
LC4128V	LC4128V-5T144I	128	3.3	5	TQFP	144	96	I
	LC4128V-75T144I	128	3.3	7.5	TQFP	144	96	I
	LC4128V-10T144I	128	3.3	10	TQFP	144	96	I
	LC4128V-5T128I	128	3.3	5	TQFP	128	92	I
	LC4128V-75T128I	128	3.3	7.5	TQFP	128	92	I
	LC4128V-10T128I	128	3.3	10	TQFP	128	92	I
	LC4128V-5T100I	128	3.3	5	TQFP	100	64	I
	LC4128V-75T100I	128	3.3	7.5	TQFP	100	64	I
	LC4128V-10T100I	128	3.3	10	TQFP	100	64	I

Downloaded from Elcodis.com electronic components distributor

ispMACH 4000V (3.3V) Industrial Devices (Cont.)

Family	Part Number	Macrocells	Voltage	t_{PD}	Package	Pin/Ball Count	I/O	Grade
LC4256V	LC4256V-5FT256AI	256	3.3	5	ftBGA	256	128	I
	LC4256V-75FT256AI	256	3.3	7.5	ftBGA	256	128	I
	LC4256V-10FT256AI	256	3.3	10	ftBGA	256	128	I
	LC4256V-5FT256BI	256	3.3	5	ftBGA	256	160	I
	LC4256V-75FT256BI	256	3.3	7.5	ftBGA	256	160	I
	LC4256V-10FT256BI	256	3.3	10	ftBGA	256	160	I
	LC4256V-5F256AI[1]	256	3.3	5	fpBGA	256	128	I
	LC4256V-75F256AI[1]	256	3.3	7.5	fpBGA	256	128	I
	LC4256V-10F256AI[1]	256	3.3	10	fpBGA	256	128	I
	LC4256V-5F256BI[1]	256	3.3	5	fpBGA	256	160	I
	LC4256V-75F256BI[1]	256	3.3	7.5	fpBGA	256	160	I
	LC4256V-10F256BI[1]	256	3.3	10	fpBGA	256	160	I
	LC4256V-5T176I	256	3.3	5	TQFP	176	128	I
	LC4256V-75T176I	256	3.3	7.5	TQFP	176	128	I
	LC4256V-10T176I	256	3.3	10	TQFP	176	128	I
	LC4256V-5T144I	256	3.3	5	TQFP	144	96	I
	LC4256V-75T144I	256	3.3	7.5	TQFP	144	96	I
	LC4256V-10T144I	256	3.3	10	TQFP	144	96	I
	LC4256V-5T100I	256	3.3	5	TQFP	100	64	I
	LC4256V-75T100I	256	3.3	7.5	TQFP	100	64	I
	LC4256V-10T100I	256	3.3	10	TQFP	100	64	I
LC4384V	LC4384V-5FT256I	384	3.3	5	ftBGA	256	192	I
	LC4384V-75FT256I	384	3.3	7.5	ftBGA	256	192	I
	LC4384V-10FT256I	384	3.3	10	ftBGA	256	192	I
	LC4384V-5F256I[1]	384	3.3	5	fpBGA	256	192	I
	LC4384V-75F256I[1]	384	3.3	7.5	fpBGA	256	192	I
	LC4384V-10F256I[1]	384	3.3	10	fpBGA	256	192	I
	LC4384V-5T176I	384	3.3	5	TQFP	176	128	I
	LC4384V-75T176I	384	3.3	7.5	TQFP	176	128	I
	LC4384V-10T176I	384	3.3	10	TQFP	176	128	I
LC4512V	LC4512V-5FT256I	512	3.3	5	ftBGA	256	208	I
	LC4512V-75FT256I	512	3.3	7.5	ftBGA	256	208	I
	LC4512V-10FT256I	512	3.3	10	ftBGA	256	208	I
	LC4512V-5F256I[1]	512	3.3	5	fpBGA	256	208	I
	LC4512V-75F256I[1]	512	3.3	7.5	fpBGA	256	208	I
	LC4512V-10F256I[1]	512	3.3	10	fpBGA	256	208	I
	LC4512V-5T176I	512	3.3	5	TQFP	176	128	I
	LC4512V-75T176I	512	3.3	7.5	TQFP	176	128	I
	LC4512V-10T176I	512	3.3	10	TQFP	176	128	I

1. Use ftBGA package. fpBGA package devices have been discontinued via PCN#14A-07.

Downloaded from Elcodis.com electronic components distributor

ispMACH 4000V (3.3V) Extended Temperature Devices

Device	Part Number	Macrocells	Voltage	t_{PD}	Package	Pin/Ball Count	I/O	Grade
LC4032V	LC4032V-75T48E	32	3.3	7.5	TQFP	48	32	E
	LC4032V-75T44E	32	3.3	7.5	TQFP	44	30	E
LC4064V	LC4064V-75T100E	64	3.3	7.5	TQFP	100	64	E
	LC4064V-75T48E	64	3.3	7.5	TQFP	48	32	E
	LC4064V-75T44E	64	3.3	7.5	TQFP	44	30	E
LC4128V	LC4128V-75T144E	128	3.3	7.5	TQFP	144	96	E
	LC4128V-75T128E	128	3.3	7.5	TQFP	128	92	E
	LC4128V-75T100E	128	3.3	7.5	TQFP	100	64	E
LC4256V	LC4256V-75T176E	256	3.3	7.5	TQFP	176	128	E
	LC4256V-75T144E	256	3.3	7.5	TQFP	144	96	E
	LC4256V-75T100E	256	3.3	7.5	TQFP	100	64	E

Downloaded from Elcodis.com electronic components distributor

Lead-Free Packaging

ispMACH 4000Z (Zero Power, 1.8V) Lead-Free Commercial Devices

Device	Part Number	Macrocells	Voltage	t_{PD}	Package	Pin/Ball Count	I/O	Grade
LC4032ZC	LC4032ZC-35MN56C	32	1.8	3.5	Lead-free csBGA	56	32	C
	LC4032ZC-5MN56C	32	1.8	5	Lead-free csBGA	56	32	C
	LC4032ZC-75MN56C	32	1.8	7.5	Lead-free csBGA	56	32	C
	LC4032ZC-35TN48C	32	1.8	3.5	Lead-free TQFP	48	32	C
	LC4032ZC-5TN48C	32	1.8	5	Lead-free TQFP	48	32	C
	LC4032ZC-75TN48C	32	1.8	7.5	Lead-free TQFP	48	32	C
LC4064ZC	LC4064ZC-37MN132C	64	1.8	3.7	Lead-free csBGA	132	64	C
	LC4064ZC-5MN132C	64	1.8	5	Lead-free csBGA	132	64	C
	LC4064ZC-75MN132C	64	1.8	7.5	Lead-free csBGA	132	64	C
	LC4064ZC-37TN100C	64	1.8	3.7	Lead-free TQFP	100	64	C
	LC4064ZC-5TN100C	64	1.8	5	Lead-free TQFP	100	64	C
	LC4064ZC-75TN100C	64	1.8	7.5	Lead-free TQFP	100	64	C
	LC4064ZC-37MN56C	64	1.8	3.7	Lead-free csBGA	56	32	C
	LC4064ZC-5MN56C	64	1.8	5	Lead-free csBGA	56	32	C
	LC4064ZC-75MN56C	64	1.8	7.5	Lead-free csBGA	56	32	C
	LC4064ZC-37TN48C	64	1.8	3.7	Lead-free TQFP	48	32	C
	LC4064ZC-5TN48C	64	1.8	5	Lead-free TQFP	48	32	C
	LC4064ZC-75TN48C	64	1.8	7.5	Lead-free TQFP	48	32	C
LC4128ZC	LC4128ZC-42MN132C	128	1.8	4.2	Lead-free csBGA	132	96	C
	LC4128ZC-75MN132C	128	1.8	7.5	Lead-free csBGA	132	96	C
	LC4128ZC-42TN100C	128	1.8	4.2	Lead-free TQFP	100	64	C
	LC4128ZC-75TN100C	128	1.8	7.5	Lead-free TQFP	100	64	C
LC4256ZC	LC4256ZC-45TN176C	256	1.8	4.5	Lead-free TQFP	176	128	C
	LC4256ZC-75TN176C	256	1.8	7.5	Lead-free TQFP	176	128	C
	LC4256ZC-45MN132C	256	1.8	4.5	Lead-free csBGA	132	96	C
	LC4256ZC-75MN132C	256	1.8	7.5	Lead-free csBGA	132	96	C
	LC4256ZC-45TN100C	256	1.8	4.5	Lead-free TQFP	100	64	C
	LC4256ZC-75TN100C	256	1.8	7.5	Lead-free TQFP	100	64	C

ispMACH 4000Z (Zero Power, 1.8V) Lead-Free Industrial Devices

Device	Part Number	Macrocells	Voltage	t_{PD}	Package	Pin/Ball Count	I/O	Grade
LC4032ZC	LC4032ZC-5MN56I	32	1.8	5	Lead-free csBGA	56	32	I
	LC4032ZC-75MN56I	32	1.8	7.5	Lead-free csBGA	56	32	I
	LC4032ZC-5TN48I	32	1.8	5	Lead-free TQFP	48	32	I
	LC4032ZC-75TN48I	32	1.8	7.5	Lead-free TQFP	48	32	I

Downloaded from Elcodis.com electronic components distributor

ispMACH 4000Z (Zero Power, 1.8V) Lead-Free Industrial Devices (Cont.)

Device	Part Number	Macrocells	Voltage	t_{PD}	Package	Pin/Ball Count	I/O	Grade
LC4064ZC	LC4064ZC-5MN132I	64	1.8	5	Lead-free csBGA	132	64	I
	LC4064ZC-75MN132I	64	1.8	7.5	Lead-free csBGA	132	64	I
	LC4064ZC-5TN100I	64	1.8	5	Lead-free TQFP	100	64	I
	LC4064ZC-75TN100I	64	1.8	7.5	Lead-free TQFP	100	64	I
	LC4064ZC-5MN56I	64	1.8	5	Lead-free csBGA	56	32	I
	LC4064ZC-75MN56I	64	1.8	7.5	Lead-free csBGA	56	32	I
	LC4064ZC-5TN48I	64	1.8	5	Lead-free TQFP	48	32	I
	LC4064ZC-75TN48I	64	1.8	7.5	Lead-free TQFP	48	32	I
LC4128ZC	LC4128ZC-75MN132I	128	1.8	7.5	Lead-free csBGA	132	96	I
	LC4128ZC-75TN100I	128	1.8	7.5	Lead-free TQFP	100	64	I
LC4256ZC	LC4256ZC-75TN176I	256	1.8	7.5	Lead-free TQFP	176	128	I
	LC4256ZC-75MN132I	256	1.8	7.5	Lead-free csBGA	132	96	I
	LC4256ZC-75TN100I	256	1.8	7.5	Lead-free TQFP	100	64	I

ispMACH 4000Z (Zero Power, 1.8V) Lead-Free Extended Temperature Devices

Device	Part Number	Macrocells	Voltage	t_{PD}	Package	Pin/Ball Count	I/O	Grade
LC4032ZC	LC4032ZC-75TN48E	32	1.8	7.5	Lead-free TQFP	48	32	E
LC4064ZC	LC4064ZC-75TN100E	64	1.8	7.5	Lead-free TQFP	100	64	E
	LC4064ZC-75TN48E	64	1.8	7.5	Lead-free TQFP	48	32	E
LC4128ZC	LC4128ZC-75TN100E	128	1.8	7.5	Lead-free TQFP	100	64	E
LC4256ZC	LC4256ZC-75TN176E	256	1.8	7.5	Lead-free TQFP	176	128	E
	LC4256ZC-75TN100E	256	1.8	7.5	Lead-free TQFP	100	64	E

ispMACH 4000C (1.8V) Lead-Free Commercial Devices

Device	Part Number	Macrocells	Voltage	t_{PD}	Package	Pin/Ball Count	I/O	Grade
LC4032C	LC4032C-25TN48C	32	1.8	2.5	Lead-free TQFP	48	32	C
	LC4032C-5TN48C	32	1.8	5	Lead-free TQFP	48	32	C
	LC4032C-75TN48C	32	1.8	7.5	Lead-free TQFP	48	32	C
	LC4032C-25TN44C	32	1.8	2.5	Lead-free TQFP	44	30	C
	LC4032C-5TN44C	32	1.8	5	Lead-free TQFP	44	30	C
	LC4032C-75TN44C	32	1.8	7.5	Lead-free TQFP	44	30	C

Downloaded from Elcodis.com electronic components distributor

ispMACH 4000C (1.8V) Lead-Free Commercial Devices (Cont.)

Device	Part Number	Macrocells	Voltage	t_{PD}	Package	Pin/Ball Count	I/O	Grade
LC4064C	LC4064C-25TN100C	64	1.8	2.5	Lead-free TQFP	100	64	C
	LC4064C-5TN100C	64	1.8	5	Lead-free TQFP	100	64	C
	LC4064C-75TN100C	64	1.8	7.5	Lead-free TQFP	100	64	C
	LC4064C-25TN48C	64	1.8	2.5	Lead-free TQFP	48	32	C
	LC4064C-5TN48C	64	1.8	5	Lead-free TQFP	48	32	C
	LC4064C-75TN48C	64	1.8	7.5	Lead-free TQFP	48	32	C
	LC4064C-25TN44C	64	1.8	2.5	Lead-free TQFP	44	30	C
	LC4064C-5TN44C	64	1.8	5	Lead-free TQFP	44	30	C
	LC4064C-75TN44C	64	1.8	7.5	Lead-free TQFP	44	30	C
LC4128C	LC4128C-27TN128C	128	1.8	2.7	Lead-free TQFP	128	92	C
	LC4128C-5TN128C	128	1.8	5	Lead-free TQFP	128	92	C
	LC4128C-75TN128C	128	1.8	7.5	Lead-free TQFP	128	92	C
	LC4128C-27TN100C	128	1.8	2.7	Lead-free TQFP	100	64	C
	LC4128C-5TN100C	128	1.8	5	Lead-free TQFP	100	64	C
	LC4128C-75TN100C	128	1.8	7.5	Lead-free TQFP	100	64	C
LC4256C	LC4256C-3FTN256AC	256	1.8	3	Lead-free ftBGA	256	128	C
	LC4256C-5FTN256AC	256	1.8	5	Lead-free ftBGA	256	128	C
	LC4256C-75FTN256AC	256	1.8	7.5	Lead-free ftBGA	256	128	C
	LC4256C-3FTN256BC	256	1.8	3	Lead-free ftBGA	256	160	C
	LC4256C-5FTN256BC	256	1.8	5	Lead-free ftBGA	256	160	C
	LC4256C-75FTN256BC	256	1.8	7.5	Lead-free ftBGA	256	160	C
	LC4256C-3FN256AC[1]	256	1.8	3	Lead-free fpBGA	256	128	C
	LC4256C-5FN256AC[1]	256	1.8	5	Lead-free fpBGA	256	128	C
	LC4256C-75FN256AC[1]	256	1.8	7.5	Lead-free fpBGA	256	128	C
	LC4256C-3FN256BC[1]	256	1.8	3	Lead-free fpBGA	256	160	C
	LC4256C-5FN256BC[1]	256	1.8	5	Lead-free fpBGA	256	160	C
	LC4256C-75FN256BC[1]	256	1.8	7.5	Lead-free fpBGA	256	160	C
	LC4256C-3TN176C	256	1.8	3	Lead-free TQFP	176	128	C
	LC4256C-5TN176C	256	1.8	5	Lead-free TQFP	176	128	C
	LC4256C-75TN176C	256	1.8	7.5	Lead-free TQFP	176	128	C
	LC4256C-3TN100C	256	1.8	3	Lead-free TQFP	100	64	C
	LC4256C-5TN100C	256	1.8	5	Lead-free TQFP	100	64	C
	LC4256C-75TN100C	256	1.8	7.5	Lead-free TQFP	100	64	C
LC4384C	LC4384C-35FTN256C	384	1.8	3.5	Lead-free ftBGA	256	192	C
	LC4384C-5FTN256C	384	1.8	5	Lead-free ftBGA	256	192	C
	LC4384C-75FTN256C	384	1.8	7.5	Lead-free ftBGA	256	192	C
	LC4384C-35FN256C[1]	384	1.8	3.5	Lead-free fpBGA	256	192	C
	LC4384C-5FN256C[1]	384	1.8	5	Lead-free fpBGA	256	192	C
	LC4384C-75FN256C[1]	384	1.8	7.5	Lead-free fpBGA	256	192	C
	LC4384C-35TN176C	384	1.8	3.5	Lead-free TQFP	176	128	C
	LC4384C-5TN176C	384	1.8	5	Lead-free TQFP	176	128	C
	LC4384C-75TN176C	384	1.8	7.5	Lead-free TQFP	176	128	C

Downloaded from Elcodis.com electronic components distributor

ispMACH 4000C (1.8V) Lead-Free Commercial Devices (Cont.)

Device	Part Number	Macrocells	Voltage	t_{PD}	Package	Pin/Ball Count	I/O	Grade
LC4512C	LC4512C-35FTN256C	512	1.8	3.5	Lead-free ftBGA	256	208	C
	LC4512C-5FTN256C	512	1.8	5	Lead-free ftBGA	256	208	C
	LC4512C-75FTN256C	512	1.8	7.5	Lead-free ftBGA	256	208	C
	LC4512C-35FN256C[1]	512	1.8	3.5	Lead-free fpBGA	256	208	C
	LC4512C-5FN256C[1]	512	1.8	5	Lead-free fpBGA	256	208	C
	LC4512C-75FN256C[1]	512	1.8	7.5	Lead-free fpBGA	256	208	C
	LC4512C-35TN176C	512	1.8	3.5	Lead-free TQFP	176	128	C
	LC4512C-5TN176C	512	1.8	5	Lead-free TQFP	176	128	C
	LC4512C-75TN176C	512	1.8	7.5	Lead-free TQFP	176	128	C

1. Use ftBGA package. fpBGA package devices have been discontinued via PCN#14A-07.

ispMACH 4000C (1.8V) Lead-Free Industrial Devices

Device	Part Number	Macrocells	Voltage	t_{PD}	Package	Pin/Ball Count	I/O	Grade
LC4032C	LC4032C-5TN48I	32	1.8	5	Lead-free TQFP	48	32	I
	LC4032C-75TN48I	32	1.8	7.5	Lead-free TQFP	48	32	I
	LC4032C-10TN48I	32	1.8	10	Lead-free TQFP	48	32	I
	LC4032C-5TN44I	32	1.8	5	Lead-free TQFP	44	30	I
	LC4032C-75TN44I	32	1.8	7.5	Lead-free TQFP	44	30	I
	LC4032C-10TN44I	32	1.8	10	Lead-free TQFP	44	30	I
LC4064C	LC4064C-5TN100I	64	1.8	5	Lead-free TQFP	100	64	I
	LC4064C-75TN100I	64	1.8	7.5	Lead-free TQFP	100	64	I
	LC4064C-10TN100I	64	1.8	10	Lead-free TQFP	100	64	I
	LC4064C-5TN48I	64	1.8	5	Lead-free TQFP	48	32	I
	LC4064C-75TN48I	64	1.8	7.5	Lead-free TQFP	48	32	I
	LC4064C-10TN48I	64	1.8	10	Lead-free TQFP	48	32	I
	LC4064C-5TN44I	64	1.8	5	Lead-free TQFP	44	30	I
	LC4064C-75TN44I	64	1.8	5	Lead-free TQFP	44	30	I
	LC4064C-10TN44I	64	1.8	10	Lead-free TQFP	44	30	I
LC4128C	LC4128C-5TN128I	128	1.8	5	Lead-free TQFP	128	92	I
	LC4128C-75TN128I	128	1.8	7.5	Lead-free TQFP	128	92	I
	LC4128C-10TN128I	128	1.8	10	Lead-free TQFP	128	92	I
	LC4128C-5TN100I	128	1.8	5	Lead-free TQFP	100	64	I
	LC4128C-75TN100I	128	1.8	7.5	Lead-free TQFP	100	64	I
	LC4128C-10TN100I	128	1.8	10	Lead-free TQFP	100	64	I

Downloaded from Elcodis.com electronic components distributor

ispMACH 4000C (1.8V) Lead-Free Industrial Devices (Cont.)

Device	Part Number	Macrocells	Voltage	t_{PD}	Package	Pin/Ball Count	I/O	Grade
LC4256C	LC4256C-5FTN256AI	256	1.8	5	Lead-free ftBGA	256	128	I
	LC4256C-75FTN256AI	256	1.8	7.5	Lead-free ftBGA	256	128	I
	LC4256C-10FTN256AI	256	1.8	10	Lead-free ftBGA	256	128	I
	LC4256C-5FTN256BI	256	1.8	5	Lead-free ftBGA	256	160	I
	LC4256C-75FTN256BI	256	1.8	7.5	Lead-free ftBGA	256	160	I
	LC4256C-10FTN256BI	256	1.8	10	Lead-free ftBGA	256	160	I
	LC4256C-5FN256AI[1]	256	1.8	5	Lead-free fpBGA	256	128	I
	LC4256C-75FN256AI[1]	256	1.8	7.5	Lead-free fpBGA	256	128	I
	LC4256C-10FN256AI[1]	256	1.8	10	Lead-free fpBGA	256	128	I
	LC4256C-5FN256BI[1]	256	1.8	5	Lead-free fpBGA	256	160	I
	LC4256C-75FN256BI[1]	256	1.8	7.5	Lead-free fpBGA	256	160	I
	LC4256C-10FN256BI[1]	256	1.8	10	Lead-free fpBGA	256	160	I
	LC4256C-5TN176I	256	1.8	5	Lead-free TQFP	176	128	I
	LC4256C-75TN176I	256	1.8	7.5	Lead-free TQFP	176	128	I
	LC4256C-10TN176I	256	1.8	10	Lead-free TQFP	176	128	I
	LC4256C-5TN100I	256	1.8	5	Lead-free TQFP	100	64	I
	LC4256C-75TN100I	256	1.8	7.5	Lead-free TQFP	100	64	I
	LC4256C-10TN100I	256	1.8	10	Lead-free TQFP	100	64	I
LC4384C	LC4384C-5FTN256I	384	1.8	5	Lead-free ftBGA	256	192	I
	LC4384C-75FTN256I	384	1.8	7.5	Lead-free ftBGA	256	192	I
	LC4384C-10FTN256I	384	1.8	10	Lead-free ftBGA	256	192	I
	LC4384C-5FN256I[1]	384	1.8	5	Lead-free fpBGA	256	192	I
	LC4384C-75FN256I[1]	384	1.8	7.5	Lead-free fpBGA	256	192	I
	LC4384C-10FN256I[1]	384	1.8	10	Lead-free fpBGA	256	192	I
	LC4384C-5TN176I	384	1.8	5	Lead-free TQFP	176	128	I
	LC4384C-75TN176I	384	1.8	7.5	Lead-free TQFP	176	128	I
	LC4384C-10TN176I	384	1.8	10	Lead-free TQFP	176	128	I
LC4512C	LC4512C-5FTN256I	512	1.8	5	Lead-free ftBGA	256	208	I
	LC4512C-75FTN256I	512	1.8	7.5	Lead-free ftBGA	256	208	I
	LC4512C-10FTN256I	512	1.8	10	Lead-free ftBGA	256	208	I
	LC4512C-5FN256I[1]	512	1.8	5	Lead-free fpBGA	256	208	I
	LC4512C-75FN256I[1]	512	1.8	7.5	Lead-free fpBGA	256	208	I
	LC4512C-10FN256I[1]	512	1.8	10	Lead-free fpBGA	256	208	I
	LC4512C-5TN176I	512	1.8	5	Lead-free TQFP	176	128	I
	LC4512C-75TN176I	512	1.8	7.5	Lead-free TQFP	176	128	I
	LC4512C-10TN176I	512	1.8	10	Lead-free TQFP	176	128	I

1. Use ftBGA package. fpBGA package devices have been discontinued via PCN#14A-07.

Downloaded from Elcodis.com electronic components distributor

ispMACH 4000B (2.5V) Lead-Free Commercial Devices

Device	Part Number	Macrocells	Voltage	t_{PD}	Package	Pin/Ball Count	I/O	Grade
LC4032B	LC4032B-25TN48C	32	2.5	2.5	Lead-Free TQFP	48	32	C
	LC4032B-5TN48C	32	2.5	5	Lead-Free TQFP	48	32	C
	LC4032B-75TN48C	32	2.5	7.5	Lead-Free TQFP	48	32	C
	LC4032B-25TN44C	32	2.5	2.5	Lead-Free TQFP	44	30	C
	LC4032B-5TN44C	32	2.5	5	Lead-Free TQFP	44	30	C
	LC4032B-75TN44C	32	2.5	7.5	Lead-Free TQFP	44	30	C
LC4064B	LC4064B-25TN100C	64	2.5	2.5	Lead-Free TQFP	100	64	C
	LC4064B-5TN100C	64	2.5	5	Lead-Free TQFP	100	64	C
	LC4064B-75TN100C	64	2.5	7.5	Lead-Free TQFP	100	64	C
	LC4064B-25TN48C	64	2.5	2.5	Lead-Free TQFP	48	32	C
	LC4064B-5TN48C	64	2.5	5	Lead-Free TQFP	48	32	C
	LC4064B-75TN48C	64	2.5	7.5	Lead-Free TQFP	48	32	C
	LC4064B-25TN44C	64	2.5	2.5	Lead-Free TQFP	44	30	C
	LC4064B-5TN44C	64	2.5	5	Lead-Free TQFP	44	30	C
	LC4064B-75TN44C	64	2.5	7.5	Lead-Free TQFP	44	30	C
LC4128B	LC4128B-27TN128C	128	2.5	2.7	Lead-Free TQFP	128	92	C
	LC4128B-5TN128C	128	2.5	5	Lead-Free TQFP	128	92	C
	LC4128B-75TN128C	128	2.5	7.5	Lead-Free TQFP	128	92	C
	LC4128B-27TN100C	128	2.5	2.7	Lead-Free TQFP	100	92	C
	LC4128B-5TN100C	128	2.5	5	Lead-Free TQFP	100	92	C
	LC4128B-75TN100C	128	2.5	7.5	Lead-Free TQFP	100	92	C
LC4256B	LC4256B-3FTN256AC	256	2.5	3	Lead-Free ftBGA	256	128	C
	LC4256B-5FTN256AC	256	2.5	5	Lead-Free ftBGA	256	128	C
	LC4256B-75FTN256AC	256	2.5	7.5	Lead-Free ftBGA	256	128	C
	LC4256B-3FTN256BC	256	2.5	3	Lead-Free ftBGA	256	160	C
	LC4256B-5FTN256BC	256	2.5	5	Lead-Free ftBGA	256	160	C
	LC4256B-75FTN256BC	256	2.5	7.5	Lead-Free ftBGA	256	160	C
	LC4256B-3FN256AC[1]	256	2.5	3	Lead-Free fpBGA	256	128	C
	LC4256B-5FN256AC[1]	256	2.5	5	Lead-Free fpBGA	256	128	C
	LC4256B-75FN256AC[1]	256	2.5	7.5	Lead-Free fpBGA	256	128	C
	LC4256B-3FN256BC[1]	256	2.5	3	Lead-Free fpBGA	256	160	C
	LC4256B-5FN256BC[1]	256	2.5	5	Lead-Free fpBGA	256	160	C
	LC4256B-75FN256BC[1]	256	2.5	7.5	Lead-Free fpBGA	256	160	C
	LC4256B-3TN176C	256	2.5	3	Lead-Free TQFP	176	128	C
	LC4256B-5TN176C	256	2.5	5	Lead-Free TQFP	176	128	C
	LC4256B-75TN176C	256	2.5	7.5	Lead-Free TQFP	176	128	C
	LC4256B-3TN100C	256	2.5	3	Lead-Free TQFP	100	64	C
	LC4256B-5TN100C	256	2.5	5	Lead-Free TQFP	100	64	C
	LC4256B-75TN100C	256	2.5	7.5	Lead-Free TQFP	100	64	C

Downloaded from Elcodis.com electronic components distributor

ispMACH 4000B (2.5V) Lead-Free Commercial Devices (Cont.)

Device	Part Number	Macrocells	Voltage	t_{PD}	Package	Pin/Ball Count	I/O	Grade
LC4384B	LC4384B-35FTN256C	384	2.5	3.5	Lead-Free ftBGA	256	192	C
	LC4384B-5FTN256C	384	2.5	5	Lead-Free ftBGA	256	192	C
	LC4384B-75FTN256C	384	2.5	7.5	Lead-Free ftBGA	256	192	C
	LC4384B-35FN256C[1]	384	2.5	3.5	Lead-Free fpBGA	256	192	C
	LC4384B-5FN256C[1]	384	2.5	5	Lead-Free fpBGA	256	192	C
	LC4384B-75FN256C[1]	384	2.5	7.5	Lead-Free fpBGA	256	192	C
	LC4384B-35TN176C	384	2.5	3.5	Lead-Free TQFP	176	128	C
	LC4384B-5TN176C	384	2.5	5	Lead-Free TQFP	176	128	C
	LC4384B-75TN176C	384	2.5	7.5	Lead-Free TQFP	176	128	C
LC4512B	LC4512B-35FTN256C	512	2.5	3.5	Lead-Free ftBGA	256	208	C
	LC4512B-5FTN256C	512	2.5	5	Lead-Free ftBGA	256	208	C
	LC4512B-75FTN256C	512	2.5	7.5	Lead-Free ftBGA	256	208	C
	LC4512B-35FN256C[1]	512	2.5	3.5	Lead-Free fpBGA	256	208	C
	LC4512B-5FN256C[1]	512	2.5	5	Lead-Free fpBGA	256	208	C
	LC4512B-75FN256C[1]	512	2.5	7.5	Lead-Free fpBGA	256	208	C
	LC4512B-35TN176C	512	2.5	3.5	Lead-Free TQFP	176	128	C
	LC4512B-5TN176C	512	2.5	5	Lead-Free TQFP	176	128	C
	LC4512B-75TN176C	512	2.5	7.5	Lead-Free TQFP	176	128	C

1. Use ftBGA package. fpBGA package devices have been discontinued via PCN#14A-07.

ispMACH 4000B (2.5V) Lead-Free Industrial Devices

Device	Part Number	Macrocells	Voltage	t_{PD}	Package	Pin/Ball Count	I/O	Grade
LC4032B	LC4032B-5TN48I	32	2.5	5	Lead-Free TQFP	48	32	I
	LC4032B-75TN48I	32	2.5	7.5	Lead-Free TQFP	48	32	I
	LC4032B-10TN48I	32	2.5	10	Lead-Free TQFP	48	32	I
	LC4032B-5TN44I	32	2.5	5	Lead-Free TQFP	44	30	I
	LC4032B-75TN44I	32	2.5	7.5	Lead-Free TQFP	44	30	I
	LC4032B-10TN44I	32	2.5	10	Lead-Free TQFP	44	30	I
LC4064B	LC4064B-5TN100I	64	2.5	5	Lead-Free TQFP	100	64	I
	LC4064B-75TN100I	64	2.5	7.5	Lead-Free TQFP	100	64	I
	LC4064B-10TN100I	64	2.5	10	Lead-Free TQFP	100	64	I
	LC4064B-5TN48I	64	2.5	5	Lead-Free TQFP	48	32	I
	LC4064B-75TN48I	64	2.5	7.5	Lead-Free TQFP	48	32	I
	LC4064B-10TN48I	64	2.5	10	Lead-Free TQFP	48	32	I
	LC4064B-5TN44I	64	2.5	5	Lead-Free TQFP	44	30	I
	LC4064B-75TN44I	64	2.5	7.5	Lead-Free TQFP	44	30	I
	LC4064B-10TN44I	64	2.5	10	Lead-Free TQFP	44	30	I

Downloaded from Elcodis.com electronic components distributor

ispMACH 4000B (2.5V) Lead-Free Industrial Devices (Cont.)

Device	Part Number	Macrocells	Voltage	t_{PD}	Package	Pin/Ball Count	I/O	Grade
LC4128B	LC4128B-5TN128I	128	2.5	5	Lead-Free TQFP	128	92	I
	LC4128B-75TN128I	128	2.5	7.5	Lead-Free TQFP	128	92	I
	LC4128B-10TN128I	128	2.5	10	Lead-Free TQFP	128	92	I
	LC4128B-5TN100I	128	2.5	5	Lead-Free TQFP	100	64	I
	LC4128B-75TN100I	128	2.5	7.5	Lead-Free TQFP	100	64	I
	LC4128B-10TN100I	128	2.5	10	Lead-Free TQFP	100	64	I
LC4256B	LC4256B-5FTN256AI	256	2.5	5	Lead-Free ftBGA	256	128	I
	LC4256B-75FTN256AI	256	2.5	7.5	Lead-Free ftBGA	256	128	I
	LC4256B-10FTN256AI	256	2.5	10	Lead-Free ftBGA	256	128	I
	LC4256B-5FTN256BI	256	2.5	5	Lead-Free ftBGA	256	160	I
	LC4256B-75FTN256BI	256	2.5	7.5	Lead-Free ftBGA	256	160	I
	LC4256B-10FTN256BI	256	2.5	10	Lead-Free ftBGA	256	160	I
	LC4256B-5FN256AI[1]	256	2.5	5	Lead-Free fpBGA	256	128	I
	LC4256B-75FN256AI[1]	256	2.5	7.5	Lead-Free fpBGA	256	128	I
	LC4256B-10FN256AI[1]	256	2.5	10	Lead-Free fpBGA	256	128	I
	LC4256B-5FN256BI[1]	256	2.5	5	Lead-Free fpBGA	256	160	I
	LC4256B-75FN256BI[1]	256	2.5	7.5	Lead-Free fpBGA	256	160	I
	LC4256B-10FN256BI[1]	256	2.5	10	Lead-Free fpBGA	256	160	I
	LC4256B-5TN176I	256	2.5	5	Lead-Free TQFP	176	128	I
	LC4256B-75TN176I	256	2.5	7.5	Lead-Free TQFP	176	128	I
	LC4256B-10TN176I	256	2.5	10	Lead-Free TQFP	176	128	I
	LC4256B-5TN100I	256	2.5	5	Lead-Free TQFP	100	64	I
	LC4256B-75TN100I	256	2.5	7.5	Lead-Free TQFP	100	64	I
	LC4256B-10TN100I	256	2.5	10	Lead-Free TQFP	100	64	I
LC4384B	LC4384B-5FTN256I	384	2.5	5	Lead-Free ftBGA	256	192	I
	LC4384B-75FTN256I	384	2.5	7.5	Lead-Free ftBGA	256	192	I
	LC4384B-10FTN256I	384	2.5	10	Lead-Free ftBGA	256	192	I
	LC4384B-5FN256I[1]	384	2.5	5	Lead-Free fpBGA	256	192	I
	LC4384B-75FN256I[1]	384	2.5	7.5	Lead-Free fpBGA	256	192	I
	LC4384B-10FN256I[1]	384	2.5	10	Lead-Free fpBGA	256	192	I
	LC4384B-5TN176I	384	2.5	5	Lead-Free TQFP	176	128	I
	LC4384B-75TN176I	384	2.5	7.5	Lead-Free TQFP	176	128	I
	LC4384B-10TN176I	384	2.5	10	Lead-Free TQFP	176	128	I
LC4512B	LC4512B-5FTN256I	512	2.5	5	Lead-Free ftBGA	256	208	I
	LC4512B-75FTN256I	512	2.5	7.5	Lead-Free ftBGA	256	208	I
	LC4512B-10FTN256I	512	2.5	10	Lead-Free ftBGA	256	208	I
	LC4512B-5FN256I[1]	512	2.5	5	Lead-Free fpBGA	256	208	I
	LC4512B-75FN256I[1]	512	2.5	7.5	Lead-Free fpBGA	256	208	I
	LC4512B-10FN256I[1]	512	2.5	10	Lead-Free fpBGA	256	208	I
	LC4512B-5TN176I	512	2.5	5	Lead-Free TQFP	176	128	I
	LC4512B-75TN176I	512	2.5	7.5	Lead-Free TQFP	176	128	I
	LC4512B-10TN176I	512	2.5	10	Lead-Free TQFP	176	128	I

1. Use ftBGA package. fpBGA package devices have been discontinued via PCN#14A-07.

Downloaded from Elcodis.com electronic components distributor

ispMACH 4000V (3.3V) Lead-Free Commercial Devices

Device	Part Number	Macrocells	Voltage	t_{PD}	Package	Pin/Ball Count	I/O	Grade
LC4032V	LC4032V-25TN48C	32	3.3	2.5	Lead-free TQFP	48	32	C
	LC4032V-5TN48C	32	3.3	5	Lead-free TQFP	48	32	C
	LC4032V-75TN48C	32	3.3	7.5	Lead-free TQFP	48	32	C
	LC4032V-25TN44C	32	3.3	2.5	Lead-free TQFP	44	30	C
	LC4032V-5TN44C	32	3.3	5	Lead-free TQFP	44	30	C
	LC4032V-75TN44C	32	3.3	7.5	Lead-free TQFP	44	30	C
LC4064V	LC4064V-25TN100C	64	3.3	2.5	Lead-free TQFP	100	64	C
	LC4064V-5TN100C	64	3.3	5	Lead-free TQFP	100	64	C
	LC4064V-75TN100C	64	3.3	7.5	Lead-free TQFP	100	64	C
	LC4064V-25TN48C	64	3.3	2.5	Lead-free TQFP	48	32	C
	LC4064V-5TN48C	64	3.3	5	Lead-free TQFP	48	32	C
	LC4064V-75TN48C	64	3.3	7.5	Lead-free TQFP	48	32	C
	LC4064V-25TN44C	64	3.3	2.5	Lead-free TQFP	44	30	C
	LC4064V-5TN44C	64	3.3	5	Lead-free TQFP	44	30	C
	LC4064V-75TN44C	64	3.3	7.5	Lead-free TQFP	44	30	C
LC4128V	LC4128V-27TN144C	128	3.3	2.7	Lead-free TQFP	144	96	C
	LC4128V-5TN144C	128	3.3	5	Lead-free TQFP	144	96	C
	LC4128V-75TN144C	128	3.3	7.5	Lead-free TQFP	144	96	C
	LC4128V-27TN128C	128	3.3	2.7	Lead-free TQFP	128	92	C
	LC4128V-5TN128C	128	3.3	5	Lead-free TQFP	128	92	C
	LC4128V-75TN128C	128	3.3	7.5	Lead-free TQFP	128	92	C
	LC4128V-27TN100C	128	3.3	2.7	Lead-free TQFP	100	64	C
	LC4128V-5TN100C	128	3.3	5	Lead-free TQFP	100	64	C
	LC4128V-75TN100C	128	3.3	7.5	Lead-free TQFP	100	64	C

Downloaded from Elcodis.com electronic components distributor

ispMACH 4000V (3.3V) Lead-Free Commercial Devices (Cont.)

Device	Part Number	Macrocells	Voltage	t_{PD}	Package	Pin/Ball Count	I/O	Grade
LC4256V	LC4256V-3FTN256AC	256	3.3	3	Lead-free ftBGA	256	128	C
	LC4256V-5FTN256AC	256	3.3	5	Lead-free ftBGA	256	128	C
	LC4256V-75FTN256AC	256	3.3	7.5	Lead-free ftBGA	256	128	C
	LC4256V-3FTN256BC	256	3.3	3	Lead-free ftBGA	256	160	C
	LC4256V-5FTN256BC	256	3.3	5	Lead-free ftBGA	256	160	C
	LC4256V-75FTN256BC	256	3.3	7.5	Lead-free ftBGA	256	160	C
	LC4256V-3FN256AC[1]	256	3.3	3	Lead-free fpBGA	256	128	C
	LC4256V-5FN256AC[1]	256	3.3	5	Lead-free fpBGA	256	128	C
	LC4256V-75FN256AC[1]	256	3.3	7.5	Lead-free fpBGA	256	128	C
	LC4256V-3FN256BC[1]	256	3.3	3	Lead-free fpBGA	256	160	C
	LC4256V-5FN256BC[1]	256	3.3	5	Lead-free fpBGA	256	160	C
	LC4256V-75FN256BC[1]	256	3.3	7.5	Lead-free fpBGA	256	160	C
	LC4256V-3TN176C	256	3.3	3	Lead-free TQFP	176	128	C
	LC4256V-5TN176C	256	3.3	5	Lead-free TQFP	176	128	C
	LC4256V-75TN176C	256	3.3	7.5	Lead-free TQFP	176	128	C
	LC4256V-3TN144C	256	3.3	3	Lead-free TQFP	144	96	C
	LC4256V-5TN144C	256	3.3	5	Lead-free TQFP	144	96	C
	LC4256V-75TN144C	256	3.3	7.5	Lead-free TQFP	144	96	C
	LC4256V-3TN100C	256	3.3	3	Lead-free TQFP	100	64	C
	LC4256V-5TN100C	256	3.3	5	Lead-free TQFP	100	64	C
	LC4256V-75TN100C	256	3.3	7.5	Lead-free TQFP	100	64	C
LC4384V	LC4384V-35FTN256C	384	3.3	3.5	Lead-free ftBGA	256	192	C
	LC4384V-5FTN256C	384	3.3	5	Lead-free ftBGA	256	192	C
	LC4384V-75FTN256C	384	3.3	7.5	Lead-free ftBGA	256	192	C
	LC4384V-35FN256C[1]	384	3.3	3.5	Lead-free fpBGA	256	192	C
	LC4384V-5FN256C[1]	384	3.3	5	Lead-free fpBGA	256	192	C
	LC4384V-75FN256C[1]	384	3.3	7.5	Lead-free fpBGA	256	192	C
	LC4384V-35TN176C	384	3.3	3.5	Lead-free TQFP	176	128	C
	LC4384V-5TN176C	384	3.3	5	Lead-free TQFP	176	128	C
	LC4384V-75TN176C	384	3.3	7.5	Lead-free TQFP	176	128	C
LC4512V	LC4512V-35FTN256C	512	3.3	3.5	Lead-free ftBGA	256	208	C
	LC4512V-5FTN256C	512	3.3	5	Lead-free ftBGA	256	208	C
	LC4512V-75FTN256C	512	3.3	7.5	Lead-free ftBGA	256	208	C
	LC4512V-35FN256C[1]	512	3.3	3.5	Lead-free fpBGA	256	208	C
	LC4512V-5FN256C[1]	512	3.3	5	Lead-free fpBGA	256	208	C
	LC4512V-75FN256C[1]	512	3.3	7.5	Lead-free fpBGA	256	208	C
	LC4512V-35TN176C	512	3.3	3.5	Lead-free TQFP	176	128	C
	LC4512V-5TN176C	512	3.3	5	Lead-free TQFP	176	128	C
	LC4512V-75TN176C	512	3.3	7.5	Lead-free TQFP	176	128	C

1. Use ftBGA package. fpBGA package devices have been discontinued via PCN#14A-07.

Downloaded from Elcodis.com electronic components distributor

ispMACH 4000V (3.3V) Lead-Free Industrial Devices

Device	Part Number	Macrocells	Voltage	t_{PD}	Package	Pin/Ball Count	I/O	Grade
LC4032V	LC4032V-5TN48I	32	3.3	5	Lead-free TQFP	48	32	I
	LC4032V-75TN48I	32	3.3	7.5	Lead-free TQFP	48	32	I
	LC4032V-10TN48I	32	3.3	10	Lead-free TQFP	48	32	I
	LC4032V-5TN44I	32	3.3	5	Lead-free TQFP	44	30	I
	LC4032V-75TN44I	32	3.3	7.5	Lead-free TQFP	44	30	I
	LC4032V-10TN44I	32	3.3	10	Lead-free TQFP	44	30	I
LC4064V	LC4064V-5TN100I	64	3.3	5	Lead-free TQFP	100	64	I
	LC4064V-75TN100I	64	3.3	7.5	Lead-free TQFP	100	64	I
	LC4064V-10TN100I	64	3.3	10	Lead-free TQFP	100	64	I
	LC4064V-5TN48I	64	3.3	5	Lead-free TQFP	48	32	I
	LC4064V-75TN48I	64	3.3	7.5	Lead-free TQFP	48	32	I
	LC4064V-10TN48I	64	3.3	10	Lead-free TQFP	48	32	I
	LC4064V-5TN44I	64	3.3	5	Lead-free TQFP	44	30	I
	LC4064V-75TN44I	64	3.3	7.5	Lead-free TQFP	44	30	I
	LC4064V-10TN44I	64	3.3	10	Lead-free TQFP	44	30	I
LC4128V	LC4128V-5TN144I	128	3.3	5	Lead-free TQFP	144	96	I
	LC4128V-75TN144I	128	3.3	7.5	Lead-free TQFP	144	96	I
	LC4128V-10TN144I	128	3.3	10	Lead-free TQFP	144	96	I
	LC4128V-5TN128I	128	3.3	5	Lead-free TQFP	128	92	I
	LC4128V-75TN128I	128	3.3	7.5	Lead-free TQFP	128	92	I
	LC4128V-10TN128I	128	3.3	10	Lead-free TQFP	128	92	I
	LC4128V-5TN100I	128	3.3	5	Lead-free TQFP	100	64	I
	LC4128V-75TN100I	128	3.3	7.5	Lead-free TQFP	100	64	I
	LC4128V-10TN100I	128	3.3	10	Lead-free TQFP	100	64	I

Downloaded from Elcodis.com electronic components distributor

ispMACH 4000V (3.3V) Lead-Free Industrial Devices (Cont.)

Device	Part Number	Macrocells	Voltage	t_{PD}	Package	Pin/Ball Count	I/O	Grade
LC4256V	LC4256V-5FTN256AI	256	3.3	5	Lead-free ftBGA	256	128	I
	LC4256V-75FTN256AI	256	3.3	7.5	Lead-free ftBGA	256	128	I
	LC4256V-10FTN256AI	256	3.3	10	Lead-free ftBGA	256	128	I
	LC4256V-5FTN256BI	256	3.3	5	Lead-free ftBGA	256	160	I
	LC4256V-75FTN256BI	256	3.3	7.5	Lead-free ftBGA	256	160	I
	LC4256V-10FTN256BI	256	3.3	10	Lead-free ftBGA	256	160	I
	LC4256V-5FN256AI[1]	256	3.3	5	Lead-free fpBGA	256	128	I
	LC4256V-75FN256AI[1]	256	3.3	7.5	Lead-free fpBGA	256	128	I
	LC4256V-10FN256AI[1]	256	3.3	10	Lead-free fpBGA	256	128	I
	LC4256V-5FN256BI[1]	256	3.3	5	Lead-free fpBGA	256	160	I
	LC4256V-75FN256BI[1]	256	3.3	7.5	Lead-free fpBGA	256	160	I
	LC4256V-10FN256BI[1]	256	3.3	10	Lead-free fpBGA	256	160	I
	LC4256V-5TN176I	256	3.3	5	Lead-free TQFP	176	128	I
	LC4256V-75TN176I	256	3.3	7.5	Lead-free TQFP	176	128	I
	LC4256V-10TN176I	256	3.3	10	Lead-free TQFP	176	128	I
	LC4256V-5TN144I	256	3.3	5	Lead-free TQFP	144	96	I
	LC4256V-75TN144I	256	3.3	7.5	Lead-free TQFP	144	96	I
	LC4256V-10TN144I	256	3.3	10	Lead-free TQFP	144	96	I
	LC4256V-5TN100I	256	3.3	5	Lead-free TQFP	100	64	I
	LC4256V-75TN100I	256	3.3	7.5	Lead-free TQFP	100	64	I
	LC4256V-10TN100I	256	3.3	10	Lead-free TQFP	100	64	I
LC4384V	LC4384V-5FTN256I	384	3.3	5	Lead-free ftBGA	256	192	I
	LC4384V-75FTN256I	384	3.3	7.5	Lead-free ftBGA	256	192	I
	LC4384V-10FTN256I	384	3.3	10	Lead-free ftBGA	256	192	I
	LC4384V-5FN256I[1]	384	3.3	5	Lead-free fpBGA	256	192	I
	LC4384V-75FN256I[1]	384	3.3	7.5	Lead-free fpBGA	256	192	I
	LC4384V-10FN256I[1]	384	3.3	10	Lead-free fpBGA	256	192	I
	LC4384V-5TN176I	384	3.3	5	Lead-free TQFP	176	128	I
	LC4384V-75TN176I	384	3.3	7.5	Lead-free TQFP	176	128	I
	LC4384V-10TN176I	384	3.3	10	Lead-free TQFP	176	128	I
LC4512V	LC4512V-5FTN256I	512	3.3	5	Lead-free ftBGA	256	208	I
	LC4512V-75FTN256I	512	3.3	7.5	Lead-free ftBGA	256	208	I
	LC4512V-10FTN256I	512	3.3	10	Lead-free ftBGA	256	208	I
	LC4512V-5FN256I[1]	512	3.3	5	Lead-free fpBGA	256	208	I
	LC4512V-75FN256I[1]	512	3.3	7.5	Lead-free fpBGA	256	208	I
	LC4512V-10FN256I[1]	512	3.3	10	Lead-free fpBGA	256	208	I
	LC4512V-5TN176I	512	3.3	5	Lead-free TQFP	176	128	I
	LC4512V-75TN176I	512	3.3	7.5	Lead-free TQFP	176	128	I
	LC4512V-10TN176I	512	3.3	10	Lead-free TQFP	176	128	I

1. Use ftBGA package. fpBGA package devices have been discontinued via PCN#14A-07.

Downloaded from Elcodis.com electronic components distributor

ispMACH 4000V (3.3V) Lead-Free Extended Temperature Devices

Device	Part Number	Macrocells	Voltage	t_{PD}	Package	Pin/Ball Count	I/O	Grade
LC4032V	LC4032V-75TN48E	32	3.3	7.5	Lead-free TQFP	48	32	E
	LC4032V-75TN44E	32	3.3	7.5	Lead-free TQFP	44	30	E
LC4064V	LC4064V-75TN100E	64	3.3	7.5	Lead-free TQFP	100	64	E
	LC4064V-75TN48E	64	3.3	7.5	Lead-free TQFP	48	32	E
	LC4064V-75TN44E	64	3.3	7.5	Lead-free TQFP	44	30	E
LC4128V	LC4128V-75TN144E	128	3.3	7.5	Lead-free TQFP	144	96	E
	LC4128V-75TN128E	128	3.3	7.5	Lead-free TQFP	128	92	E
	LC4128V-75TN100E	128	3.3	7.5	Lead-free TQFP	100	64	E
LC4256V	LC4256V-75TN176E	256	3.3	7.5	Lead-free TQFP	176	128	E
	LC4256V-75TN144E	256	3.3	7.5	Lead-free TQFP	144	96	E
	LC4256V-75TN100E	256	3.3	7.5	Lead-free TQFP	100	64	E

For Further Information

In addition to this data sheet, the following technical notes may be helpful when designing with the ispMACH 4000V/B/C/Z family:

- TN1004, ispMACH 4000 Timing Model Design and Usage Guidelines
- TN1005, Power Estimation in ispMACH 4000V/B/C/Z Devices

Revision History

Date	Version	Change Summary
—	—	Previous Lattice releases.
July 2003	17z	Changed device status for LC4064ZC and LC4128ZC to production release and updated/added AC and DC parameters as well as ordering part numbers for LC4064ZC and LC4128ZC devices.
		Improved leakage current specifications for ispMACH 4000Z. For ispMACH 4000V/B/C IIL, IIH condition now includes 0V and 3.6V end points ($0 \leq VIN \leq 3.6V$).
		Added 132-ball chip scale BGA power supply and NC connections.
		Added 132-ball chip scale BGA logic signal connections for LC4064ZC, LC4128ZC and LC4256ZC devices.
		Added lead-free package designators.
October 2003	18z	Hot socketing characteristics footnote 1. has been enhanced; Insensitive to sequence of VCC or VCCO. However, assumes monotonic rise/fall rates for Vcc and Vcco, provided (VIN - VCCO) ≤ 3.6V.
		Improved LC4064ZC t_S to 2.5ns, t_{ST} to 2.7ns and f_{MAX} (Ext.) to 175MHz, LC4128ZC t_{CO} to 3.5ns and f_{MAX} (Ext.) to 161MHz (version v.2.1).
		Improved associated internal timing numbers and timing adders (version v.2.1).
		Added ispMACH 4000V/B/C/Z ORP Reference Tables.
		Enhanced ORP information in device pinout tables consistent with the ORP Combinations for I/O Blocks tables (table 6, 7, 8 and 9 in page 9-11).
		Corrected GLB/MC/Pad information in the 256-fpBGA pinouts for the LC4256V/B/C 160-I/O version.
		Added the ispMACH 4000 Family Speed Grade Offering table.
		Added the ispMACH 4128ZC Industrial and Automotive Device OPNs
December 2003	19z	Added the ispMACH 4032ZC and 4064ZC Industrial and Automotive Device OPNs

Downloaded from Elcodis.com electronic components distributor

Revision History (Cont.)

Date	Version	Change Summary
January 2004	20z	ispMACH 4000Z data sheet status changed from preliminary to final. Documents production release of the ispMACH 4256Z device.
		Added new feature - ispMACH 4000Z supports operation down to 1.6V.
		Added lead-free packaging ordering part numbers for the ispMACH 4000Z/C/V devices.
April 2004	21z	Updated I_{PU} (I/O Weak Pull-up Resistor Current) max. specification for the ispMACH 4000V/B/C; -150µA to -200µA.
November 2004	22z	Added User Electronic Signature section.
		Added ispMACH 4000B (2.5V) Lead-Free Ordering Part Numbers.
December 2004	22z.1	Updated Further Information section.
February 2006	22z.2	Clarification to ispMACH 4000Z Input Leakage (I_{IH}) specification.
March 2007	22.3	Updated ispMACH 4000 Introduction section.
		Updated Signal Descriptions table.
June 2007	22.4	Updated Features bullets to include reference to “LA” automotive data sheet under the “Broad Device Offering” bullet.
		Added footnote 1 to Part Number Description to reference the “LA” automotive data sheet.
		Changed device temperature references from ‘Automotive’ to “Extended Temperature” for non-AEC-Q100 qualified devices.
November 2007	23.0	Added 256-ftBGA package Ordering Part Number information per PCN#14A-07.
May 2009	23.1	Correction to t_{CW}, t_{GW}, t_{WIR} and f_{MAX} parameters in ispMACH 4000Z External Switching Characteristics table.
		Correction to t_{CW}, t_{GW}, t_{WIR} and f_{MAX} parameters in ispMACH 4000V/B/C External Switching Characteristics table.

Downloaded from Elcodis.com electronic components distributor