# Specification for Production

| | |
|---|---|
| Applicant / Manufacturer Hardware | Panasonic Industrial Devices Europe GmbH<br>Zeppelinstrasse 19<br>21337 Lüneburg<br>Germany |
| Applicant / Manufacturer Software | Please refer to chapter 26 / 26.1 Information regarding Software Versions |
| Software Version | Please refer to chapter 26 / 26.1 Information regarding Software Versions |
| Bluetooth QDL ID | Qualified Design Listing (QDL) ID: B022941<br>As Controller Sub-System Listing for PAN17xx Series. |

By purchase of any of products described in this document the customer accepts the document's validity and declares their agreement and understanding of its contents and recommendations. Panasonic reserves the right to make changes as required without notification.



Downloaded from Elcodis.com electronic components distributor

TABLE OF CONTENTS

1. Scope of this Document ..... 4
2. Difference PAN1720 / PAN1721 ..... 4
3. Difference PAN172x / PAN171x ..... 4
4. Key Features ..... 4
5. Bluetooth Low Energy ..... 6
6. Applications for the Module ..... 6
7. Description for the Module ..... 6
8. Detailed Description ..... 7
   8.1. PAN172x Terminal Layout ..... 7
9. Bluetooth Features ..... 9
10. PAN1720 Block Diagram ..... 9
11. PAN17x1 Block Diagram ..... 10
12. Test Conditions ..... 11
13. General Device Requirements and Operation ..... 11
   13.1. Absolute Maximum Ratings ..... 11
   13.2. Recommended Operating Conditions ..... 11
   13.3. PAN1720 Current Consumption ..... 12
14. Bluetooth RF Performance ..... 13
   14.1. PAN1720 Bluetooth Characteristics ..... 13
   14.2. PAN1721 Bluetooth Characteristics ..... 13
   14.3. PAN172X Spurious Emission ..... 13
15. Soldering Temperature-Time Profile (for reflow soldering) ..... 14
   15.1. For lead solder ..... 14
   15.2. For leadfree solder ..... 14
16. PAN172x Module Dimension ..... 15
17. PAN171x Module Dimension ..... 16
18. PAN172x FootPrint of the Module ..... 17
19. PAN171x FootPrint of the Module ..... 18
20. Case Marking ..... 19
   20.1. Example for Marking ..... 19
   20.2. Marking Definition ..... 19
21. Mechanical Requirements ..... 19
22. Development of Applications ..... 20
23. Reliability Tests ..... 20
24. Cautions ..... 20
   24.1. Design Notes ..... 20
   24.2. Installation Notes ..... 21
   24.3. Usage Conditions Notes ..... 21
   24.4. Storage Notes ..... 22



Downloaded from Elcodis.com electronic components distributor

24.5. Safety Cautions ..... 22
24.6. Other cautions ..... 22
25. Packaging ..... 24
25.1. PAN172x Tape Dimension ..... 24
25.2. PAN171x Tape Dimension ..... 25
25.3. Packing in Tape ..... 26
25.4. Component Direction ..... 26
25.5. Reel Dimension ..... 27
25.6. Label for Package ..... 28
25.7. Total Package ..... 28
26. Ordering Information ..... 29
26.1. Information regarding Software Versions ..... 29
27. RoHS and REACH Declaration ..... 30
28. Data Sheet Status ..... 31
29. History for this Document ..... 31
30. Related Documents ..... 31
31. General Information ..... 32
32. Regulatory Information ..... 32
32.1. FCC Notice ..... 32
32.2. Caution ..... 32
32.3. Labeling Requirements ..... 33
32.4. Antenna Warning ..... 33
32.5. Approved Antenna List ..... 33
32.6. RF Exposure PAN172x ..... 33
33. Industry Canada Certification ..... 34
33.1. IC Notice ..... 34
33.2. Labeling Requirements ..... 34
34. Bluetooth Certification ..... 34
35. European R&TTE Declaration of Conformity ..... 35
36. Life Support Policy ..... 35



Downloaded from Elcodis.com electronic components distributor

## 1. SCOPE OF THIS DOCUMENT

This product specification applies to Panasonic's, Class 2, Bluetooth®[1] low energy single mode module, series number: PAN1720 (CC2540 from Texas Instruments) and PAN1721 (CC2541 from Texas Instruments).

## 2. DIFFERENCE PAN1720 / PAN1721

Both the PAN1720 and PAN1721 are refered to as the PAN172x in this document.

The PAN1721 is pin-compatible with the PAN1720, with the exception that USB is the hardware communication interface on the PAN1720 and I2C is the hardware communication interface on the PAN1720. Compared to the PAN1720, the PAN1721 provides lower RF current consumption. The PAN1721 does not have the USB interface found on the PAN1720, and provides lower maximum output power in TX mode.

Additional details , which have an impact on the module can be found in the datasheets from Texas Instruments.

CC2540 from Texas Instruments

CC2541 from Texas Instruments

Both ICs the CC2540 as well as the CC2541 come with an internal 256 KB flash memory.

## 3. DIFFERENCE PAN172X / PAN171X

The PAN171x are the non antenna version where the PAN172x are the versions with antenna.

## 4. KEY FEATURES

- Bluetooth Low Energy Single Mode 4.0
- Surface mount type 15.6 x 8.7 x 1.8 mm³
- Up to 4.0 dBm Tx power (typical) with transmit power control
- CC2541 has typically 0dBm Tx power
- High sensitivity (-94 dBm typ.)
- Texas Instrument's CC2540/CC2541 Single Chip BLE Solution inside
- High performance low power 8051 Microcontroller core
- No external components needed
- Fast Connection Setup
- Internal crystal oscillator (26MHz)
- Internal 32khz crystal oscillator for Sleep Timer
- Two powerful USARTs
- USB or I2C interface
- Powerful five channel DMA

[1] Bluetooth is a registered trademark of the Bluetooth Special Interest Group.



Downloaded from Elcodis.com electronic components distributor

- Latest Profiles included e.g. Battery Monitor and Temperature sensor
- Integrated shielding to resist EMI
- Manufactured in conformance with RoHS



Downloaded from Elcodis.com electronic components distributor

## 5. BLUETOOTH LOW ENERGY

Bluetooth Low Energy (BLE), part of Bluetooth Ver. 4.0, specifies two types of implementation: Single mode and dual mode. Single mode devices implement the low energy specification and consume just a fraction of the power of classic Bluetooth, allowing the short-range wireless standard to extend to coin cell battery applications for the first time. Dual mode devices combine low energy with the power of classic Bluetooth and are likely to become a de facto feature in almost all new Bluetooth enabled cellular phones and computers.

Single mode Bluetooth 4.0 Low Energy is not backwards compatible with previous Bluetooth standards. Dual mode Bluetooth 4.0 Low Energy is backwards compatible and well suited for gateway applications, but is not practical for low power devices.

## 6. APPLICATIONS FOR THE MODULE

All Embedded Wireless Applications

- Access Points
- Industrial Control
- Medical
- Scanners
- Wireless Sensors
- Low Power
- Proximity
- Smart Phone
- Access Points
- Temperature
- Wellness
- Sports

## 7. DESCRIPTION FOR THE MODULE

The PAN172x is a short-range, Class 2, BLE single mode module for implementing Bluetooth functionality into various electronic devices. A block diagram can be found in chapter 10.

The PAN172x is a cost-effective, low-power, true system-on-chip (SoC) for Bluetooth low energy applications. It enables robust BLE master or slave nodes to be built with very low total bill-of-material costs. The PAN172x combines an excellent RF transceiver with an industry-standard enhanced 8051 MCU, in-system programmable flash memory, 8-KB RAM, and many other powerful supporting features and peripherals. The PAN172x is suitable for systems where very low power consumption is required. Very low-power sleep modes are available. Short transition times between operating modes further enable low power consumption.

Panasonic offers Bluetooth low energy protocol stacks and applications from Texas Instruments and BlueRadios. The Bluetooth low energy protocol stack from Texas Instruments, is a flexible and cost-effective single-mode Bluetooth low energy solution.

The BlueRadios stack enables rapid and low cost development using an AT command set without the need for a complier. Additional advantages include UART programming, over-the-air-updates, easy integration "C" library framework, serial streaming of data, and smart phone libraries and applications.



Downloaded from Elcodis.com electronic components distributor

Refer to [1] PAN172xETU Design-Guide and chapter 26 Ordering Information.

Please contact your local sales office for further details on additional options and services:

www.panasonic.com/rfmodules for the US,
http://industrial.panasonic.com/eu/i/29606/wireless_modules/wireless_modules.html for EU

or write an e-mail to wireless@eu.panasonic.com.

# 8. DETAILED DESCRIPTION

## 8.1. PAN172X TERMINAL LAYOUT

PAN17x1 I2C pins are marked with a blue circle.

PAN171x antenna pin is marked with a blue circle.

Top View, Application PCB

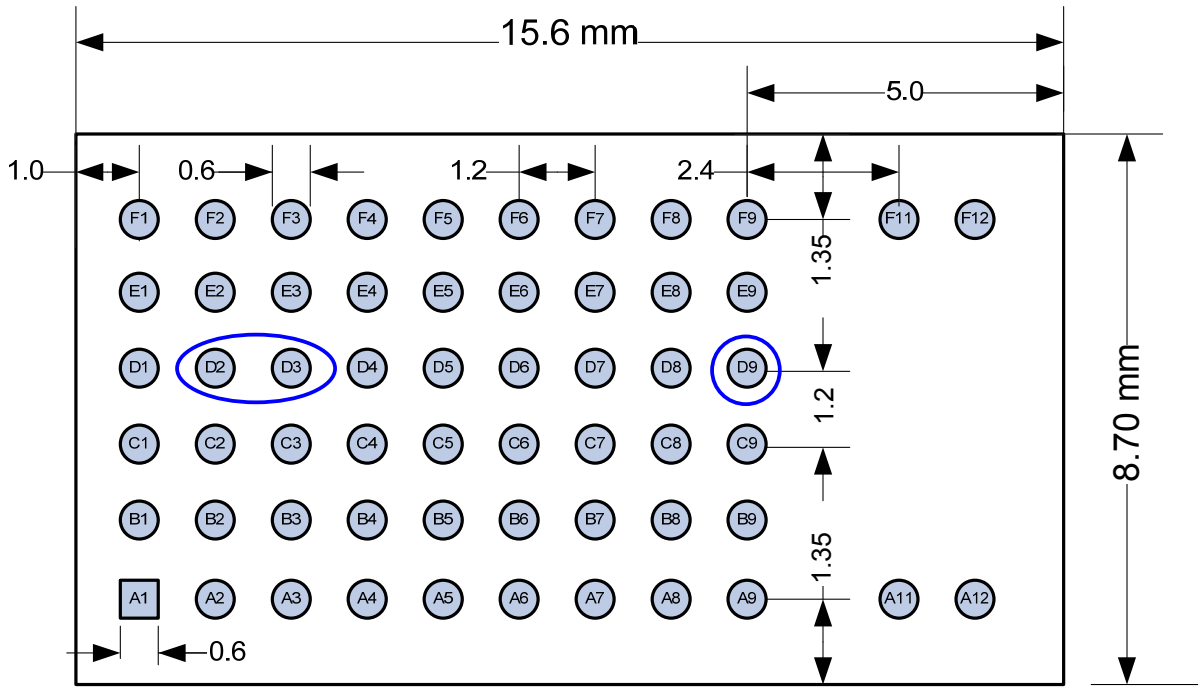





Downloaded from Elcodis.com electronic components distributor

| No | Pin Name | Pin Type | Description |
|---|---|---|---|
| A1 | GND | Ground Pin | Connect to Ground |
| A2 | P1.0 | Digital I/O | Port 1.0 – 20mA drive capability |
| A3 | Reset | Digital Input | Reset, active-low |
| A4 | VCC | Power | 2V – 3.6V analog/digital power supply connection |
| A5 | VCC | Power | 2V – 3.6V analog/digital power supply connection |
| A6 | VCC | Power | 2V – 3.6V analog/digital power supply connection |
| A7 | GND | Ground Pin | Connect to Ground |
| A8 | NC | | Not Connected |
| A9 | GND | Ground Pin | Connect to Ground |
| A11 | GND | Ground Pin | Connect to Ground |
| A12 | GND | Ground Pin | Connect to Ground |
| B1 | P1.3 | Digital I/O | Port 1.3 |
| B2 | P1.2 | Digital I/O | Port 1.2 |
| B3 | P1.1 | Digital I/O | Port 1.1 – 20mA drive capability |
| B4 | P0.6 | Digital I/O | Port 0.6 |
| B5 | NC | | Not Connected |
| B6 | P0.1 | Digital I/O | Port 0.1 |
| B7 | P0.0 | Digital I/O | Port 0.0 |
| B8 | NC | | Not Connected |
| B9 | NC | | Not Connected |
| C1 | NC | | Not Connected |
| C2 | P1.4 | Digital I/O | Port 1.4 / BR-SW UART CTS |
| C3 | P1.5 | Digital I/O | Port 1.5 / BR-SW UART RTS |
| C4 | P0.7 | Digital I/O | Port 0.7 |
| C5 | NC | | Not Connected |
| C6 | NC | | Not Connected |
| C7 | NC | | Not Connected |
| C8 | GND | Ground Pin | Connect to Ground |
| C9 | GND | Ground Pin | Connect to Ground |
| D1 | DVDD_USB | Power (digital) | 2V – 3.6V digital power supply connection |
| D2 | USB_N | Digital I/O | USB N / PAN17x1 I2C SDA // Leave floating if not used. |
| D3 | USB_P | Digital I/O | USB P / PAN17x1 I2C SCL // Leave floating if not used. |
| D4 | NC | | Not Connected |
| D5 | NC | | Not Connected |
| D6 | NC | | Not Connected |
| D7 | GND | Ground Pin | Connect to Ground |
| D8 | GND | Ground Pin | Connect to Ground |
| D9 | NC/RF | | PAN172x Not Connected/RF_Out PAN171x |
| E1 | P2.1/DD | Digital I/O | Port 2.1 / Programming Interface DD |
| E2 | P2.2/DC | Digital I/O | Port 2.2 / Programming Interface DC |
| E3 | DGND_USB | Ground Pin | Connect to Ground |
| E4 | NC | | Not Connected |
| E5 | NC | | Not Connected |
| E6 | P0.2/RX/MISO | Digital I/O | Port 0.2 / TI-SW UART RX / SPI MISO |
| E7 | NC | | Not Connected |
| E8 | GND | Ground Pin | Connect to Ground |
| E9 | GND | Ground Pin | Connect to Ground |
| F1 | GND | Ground Pin | Connect to Ground |
| F2 | P1.6 | Digital I/O | Port 1.6 / BR-SW UART TX |
| F3 | P1.7 | Digital I/O | Port 1.7 / BR-SW UART RX |
| F4 | P2.0 | Digital I/O | Port 2.0 |
| F5 | P0.4/CTS/CS | Digital I/O | Port 0.4 / TI-SW UART CTS / SPI CS |
| F6 | NC | | Not Connected |
| F7 | P0.3/TX/MOSI | Digital I/O | Port 0.3 / TI-SW UART TX /SPI MOSI |
| F8 | P0.5/RTS/CLK | Digital I/O | Port 0.5 / TI-SW UART RTS /SPI CLK |
| F9 | GND | Ground Pin | Connect to Ground |
| F11 | GND | Ground Pin | Connect to Ground |
| F12 | GND | Ground Pin | Connect to Ground |



Downloaded from Elcodis.com electronic components distributor

## 9. BLUETOOTH FEATURES

- Bluetooth 4.0 single mode low energy technology.
- Class 2 TX power w/o external PA, improving link robustness.
- Excellent link budget (up to 96 dB), enabling long-range applications.
- Accurate digital received signal-strength indicator (RSSI)
- Integrates the new low power profiles and services
- Embedded BT-Stack available

## 10. PAN1720 BLOCK DIAGRAM

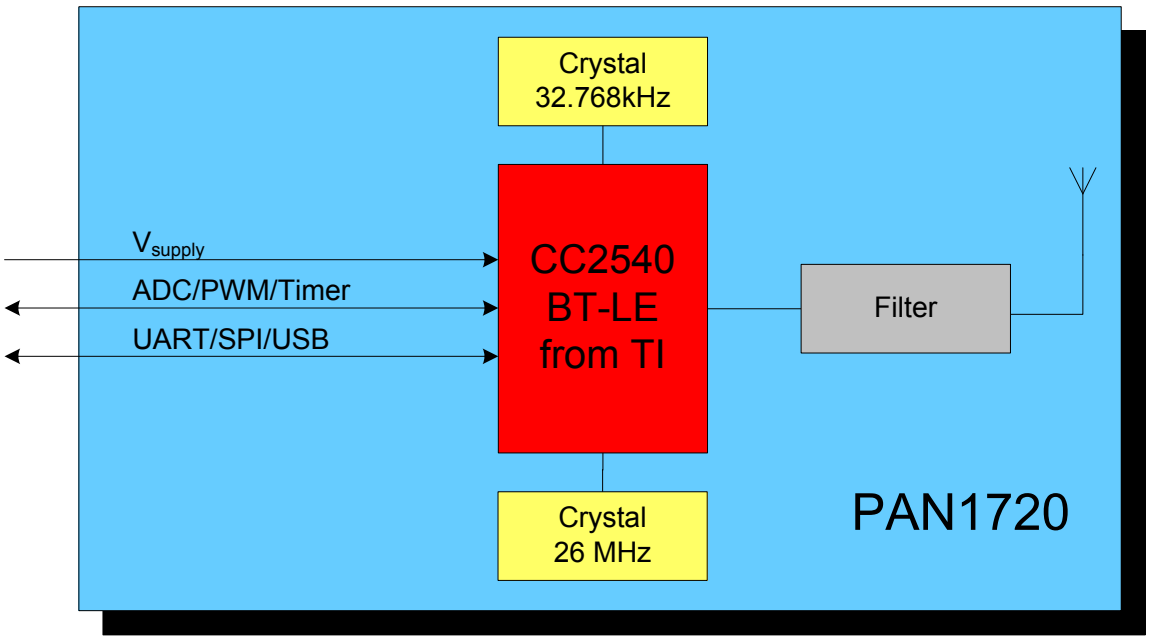


Block Diagram of PAN17x1 is similar, but has I2C interface instead of USB. Refer to the next page as well as to chapter 8.1 PAN172x Terminal Layout.



Downloaded from Elcodis.com electronic components distributor

## 11. PAN17X1 BLOCK DIAGRAM

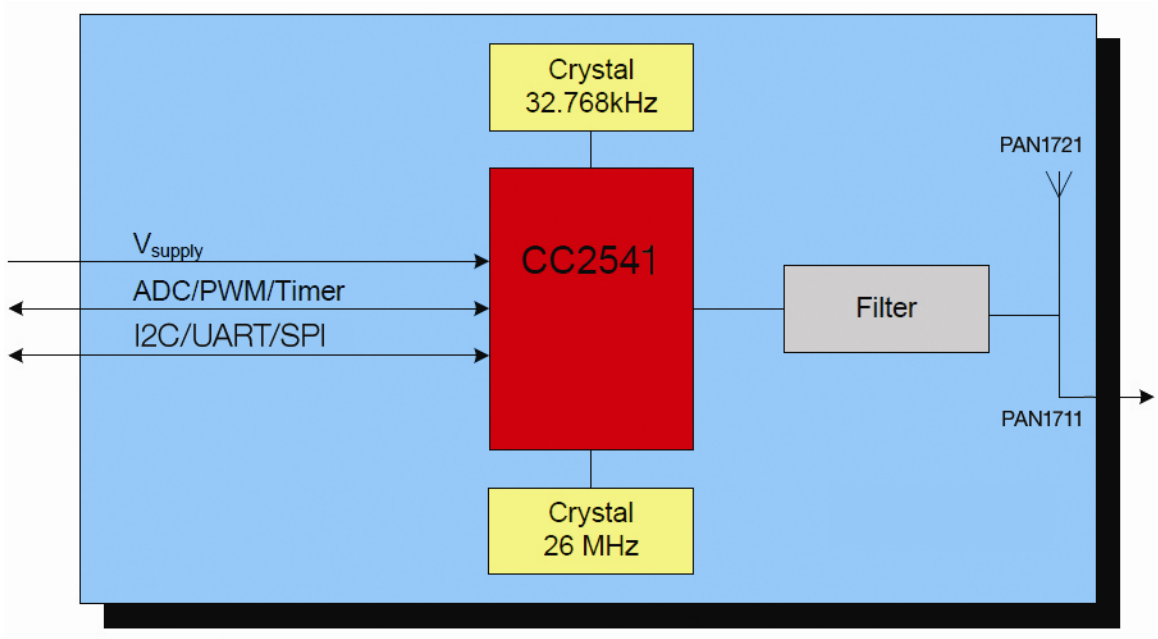




Downloaded from Elcodis.com electronic components distributor

# 12. TEST CONDITIONS

Measurements shall be made under operating free-air temperature range unless otherwise specified.

| | |
|---|---|
| Temperature | 25 ± 10°C |
| Humidity | 40 to 85%RH |
| Supply Voltage | 3.3V |

# 13. GENERAL DEVICE REQUIREMENTS AND OPERATION

All specifications are over temperature and process, unless indicated otherwise.

## 13.1. ABSOLUTE MAXIMUM RATINGS

| No | See [2] | | Value | Unit |
|---|---|---|---|---|
| Ratings Over Operating Free-Air Temperature Range | | | | |
| 1 | Supply voltage | All supply pins must have the same voltage | –0.3 to 3.9 | V |
| 2 | Voltage on any digital pin | | –0.3 to VDD+0.3 <3,9 | V |
| 3 | Operating ambient temperature range | | –40 to 85 | °C |
| 4 | Storage temperature range | | –40 to 125 | °C |
| 5 | Bluetooth RF inputs | | 10 | dBm |
| 6 | ESD:<br>All pads, according to human-body model, JEDEC STD 22, method A114<br>According to charged-device model, JEDEC STD 22, method C101 | | <br>1000<br>500 | V |

## 13.2. RECOMMENDED OPERATING CONDITIONS

| No | Rating | Min | Max | Unit |
|---|---|---|---|---|
| 1 | Power supply voltage | 2 | 3.6 | V |
| 2 | Maximum ambient operating temperature | -40 | 85 | °C |

[2] Stresses beyond those listed under "absolute maximum ratings" may cause permanent damage to the device. These are stress ratings only and functional operation of the device at these or any other conditions beyond those indicated under "recommended operating conditions" is not implied. Exposure to absolute-maximum-rated conditions for extended periods may affect device reliability.



Downloaded from Elcodis.com electronic components distributor

## 13.3. PAN1720 CURRENT CONSUMPTION

The current consumption is dependant on the user scenario and the setup and timing in the low power modes. The total power consumption can be optimized by adjusting the scan windows and intervals.

Please refer for the latest information for different power modes to the chapter "Electrical Characteristics" in Texas Instruments datasheet, refer to [2]. As indication below are typical values from CC2540 datasheet.

For PAN1721 refer to CC2541 datasheet.

### ELECTRICAL CHARACTERISTICS

Measured on Texas Instruments CC2540 EM reference design with $T_A$ = 25°C and VDD = 3 V

| PARAMETER | | TEST CONDITIONS | MIN | TYP | MAX | UNIT |
|---|---|---|---|---|---|---|
| $I_{core}$ | Core current consumption | Power mode 1. Digital regulator on; 16-MHz RCOSC and 32-MHz crystal oscillator off; 32.768-kHz XOSC, POR, BOD and sleep timer active; RAM and register retention | | 235 | | µA |
| | | Power mode 2. Digital regulator off; 16-MHz RCOSC and 32-MHz crystal oscillator off; 32.768-kHz XOSC, POR, and sleep timer active; RAM and register retention | | 0.9 | | µA |
| | | Power mode 3. Digital regulator off; no clocks; POR active; RAM and register retention | | 0.4 | | µA |
| | | Low MCU activity: 32-MHz XOSC running. No radio or peripherals. No flash access, no RAM access. | | 6.7 | | mA |
| $I_{peri}$ | Peripheral current consumption (Adds to core current $I_{core}$ for each peripheral unit activated) | Timer 1. Timer running, 32-MHz XOSC used | | 90 | | µA |
| | | Timer 2. Timer running, 32-MHz XOSC used | | 90 | | µA |
| | | Timer 3. Timer running, 32-MHz XOSC used | | 60 | | µA |
| | | Timer 4. Timer running, 32-MHz XOSC used | | 70 | | µA |
| | | Sleep timer, including 32.753-kHz RCOSC | | 0.6 | | µA |
| | | ADC, when converting | | 1.2 | | mA |

### GENERAL CHARACTERISTICS

Measured on Texas Instruments CC2540 EM reference design with $T_A$ = 25°C and VDD = 3 V

| PARAMETER | TEST CONDITIONS | MIN | TYP | MAX | UNIT |
|---|---|---|---|---|---|
| **WAKE-UP AND TIMING** | | | | | |
| Power mode 1 → Active | Digital regulator on, 16-MHz RCOSC and 32-MHz crystal oscillator off. Start-up of 16-MHz RCOSC | | 4 | | µs |
| Power mode 2 or 3 → Active | Digital regulator off, 16-MHz RCOSC and 32-MHz crystal oscillator off. Start-up of regulator and 16-MHz RCOSC | | 120 | | µs |
| Active → TX or RX | Crystal ESR = 16 Ω. Initially running on 16-MHz RCOSC, with 32-MHz XOSC OFF | | 410 | | µs |
| | With 32-MHz XOSC initially on | | 160 | | µs |
| RX/TX turnaround | | | 150 | | µs |
| **RADIO PART** | | | | | |
| RF frequency range | Programmable in 2-MHz steps | 2402 | | 2480 | MHz |
| Data rate and modulation format | 1 Mbps, GFSK, 250 kHz deviation | | | | |



Downloaded from Elcodis.com electronic components distributor

# 14. BLUETOOTH RF PERFORMANCE

## 14.1. PAN1720 BLUETOOTH CHARACTERISTICS

| No | Characteristics | Condition | Min | Typ | Max | BT Spec | Unit |
|---|---|---|---|---|---|---|---|
| 1 | Operation frequency range | | 2402 | | 2480 | | MHz |
| 2 | Channel spacing | | | 2 | | | MHz |
| 3 | Output Power | Maximum setting, measured at single ended 50ohm. | | 4 | | | dBm |
| | | Minimum setting, measured at single ended 50ohm. | | -24 | | | dBm |
| 4 | Sensitivity, High Gain Mode | High-gain mode | | -93.0 | | -70 | dBm |
| | | Standard mode | | -92.5 | | -70 | |

## 14.2. PAN1721 BLUETOOTH CHARACTERISTICS

| No | Characteristics | Condition | Min | Typ | Max | BT Spec | Unit |
|---|---|---|---|---|---|---|---|
| 1 | Operation frequency range | | 2402 | | 2480 | | MHz |
| 2 | Channel spacing | | | 2 | | | MHz |
| 3 | Output Power | Maximum setting, measured at single ended 50ohm. | | 0 | | | dBm |
| | | Minimum setting, measured at single ended 50ohm. | | -24 | | | dBm |
| 4 | Sensitivity, High Gain Mode | High-gain mode | | -93.0 | | -70 | dBm |
| | | Standard mode | | -92.5 | | -70 | |

## 14.3. PAN17XX SPURIOUS EMISSION

| No | Characteristics | Condition | Typ | Max | Unit |
|---|---|---|---|---|---|
| 1 | Spurious emissions | Conducted measurement with a 50-Ω single-ended load. Complies with EN 300 328, EN 300 440 class 2, FCC CFR47, Part 15 and ARIB STD-T-66 | | -41 | dBm |



Downloaded from Elcodis.com electronic components distributor

## 15. SOLDERING TEMPERATURE-TIME PROFILE (FOR REFLOW SOLDERING)

### 15.1. FOR LEAD SOLDER

**Recommended temp. profile for reflow soldering**

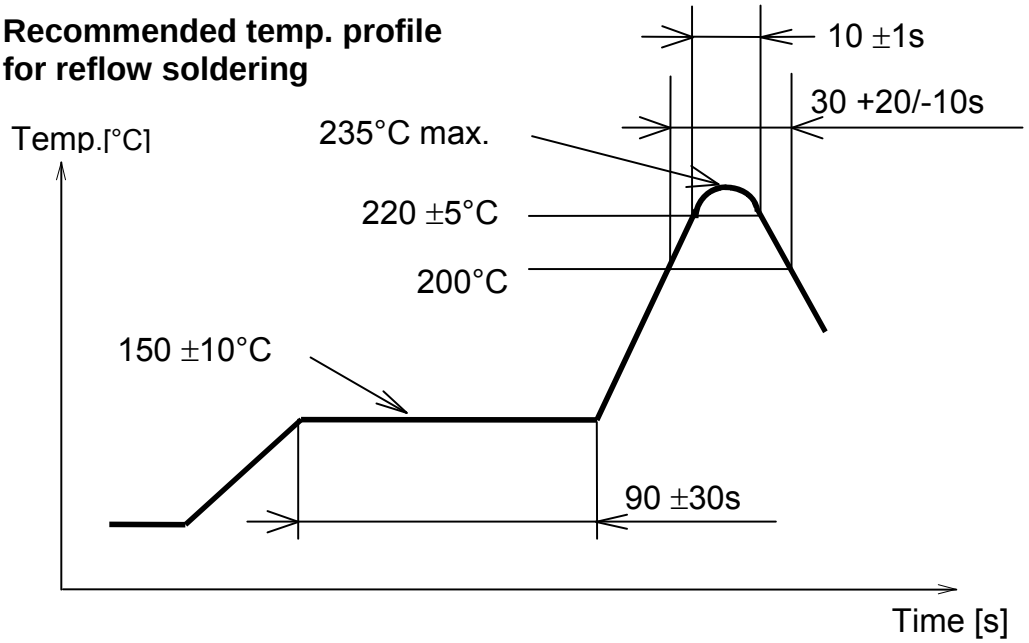


### 15.2. FOR LEADFREE SOLDER

**Our used temp. profile for reflow soldering**

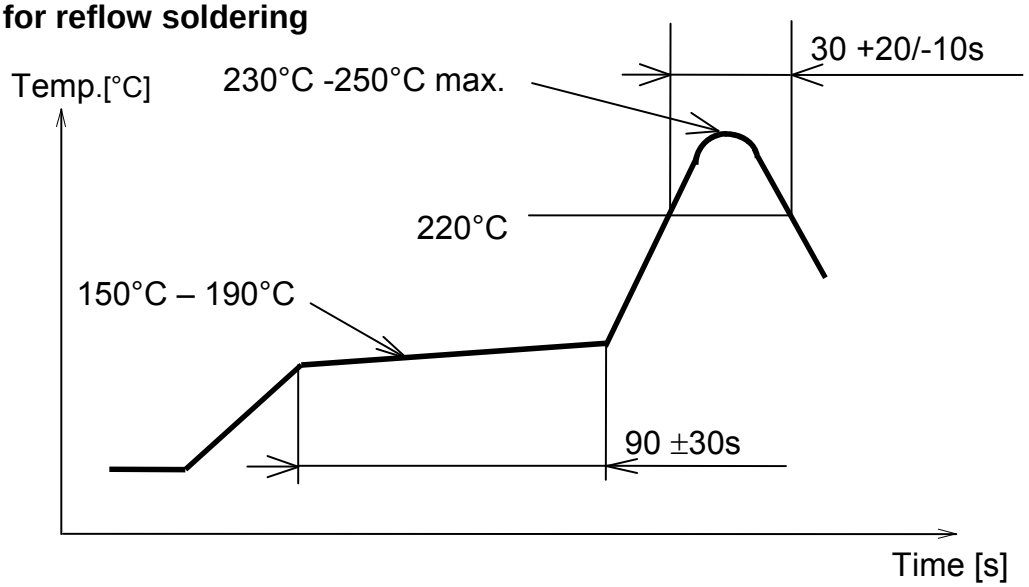


Reflow permissible cycle: 2
Opposite side reflow is prohibited due to module weight.




Downloaded from Elcodis.com electronic components distributor

## 16. PAN172X MODULE DIMENSION

| No. | Item | Dimension | Tolerance | Remark |
|---|---|---|---|---|
| 1 | Width | 8.70 | ± 0.20 | |
| 2 | Length | 15.60 | ± 0.20 | |
| 3 | Height | 1.80 | ± 0.20 | With case |

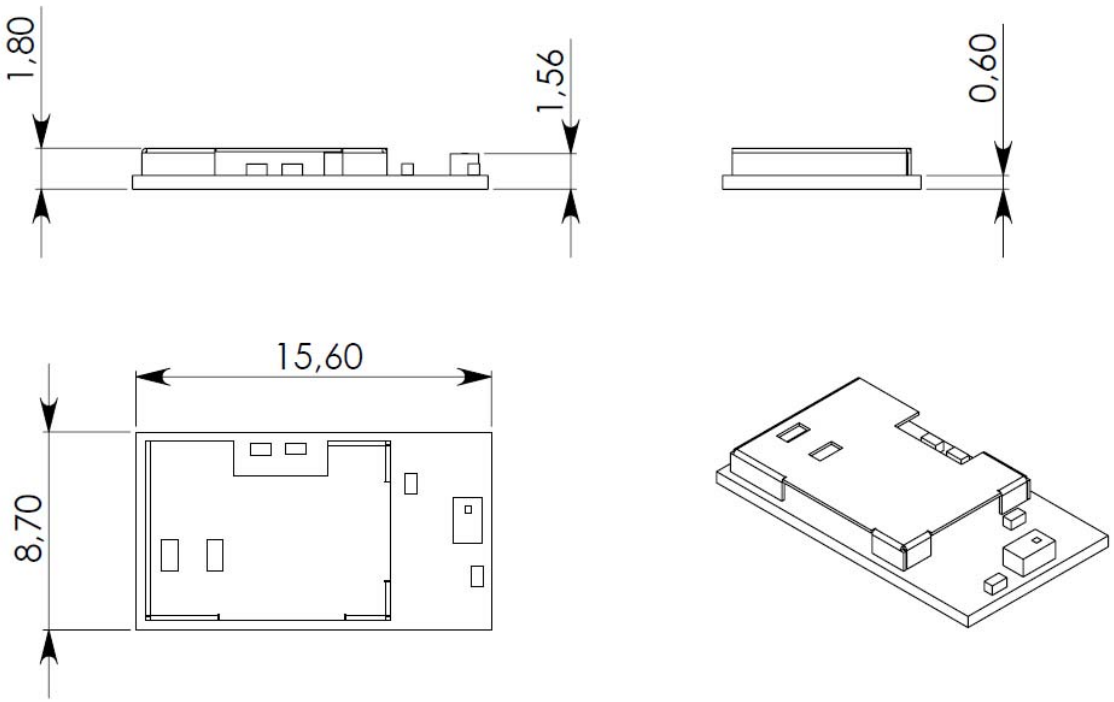




Downloaded from Elcodis.com electronic components distributor

## 17. PAN171X MODULE DIMENSION

| No. | Item | Dimension | Tolerance | Remark |
|---|---|---|---|---|
| 1 | Width | 8.70 | ± 0.20 | |
| 2 | Length | 11.60 | ± 0.20 | |
| 3 | Height | 1.80 | ± 0.20 | With case |

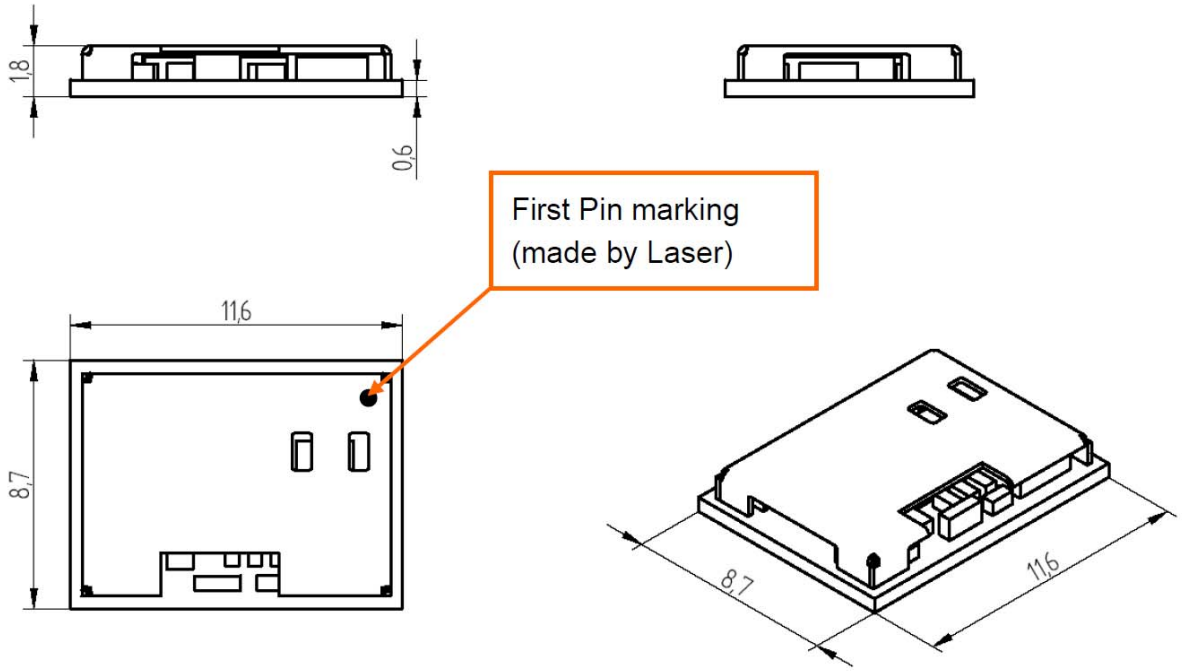




Downloaded from Elcodis.com electronic components distributor

## 18. PAN172X FOOTPRINT OF THE MODULE

All dimensions are in millimeters.
The outer dimensions have a tolerance of ± 0.2mm.

Top view, Application PCB

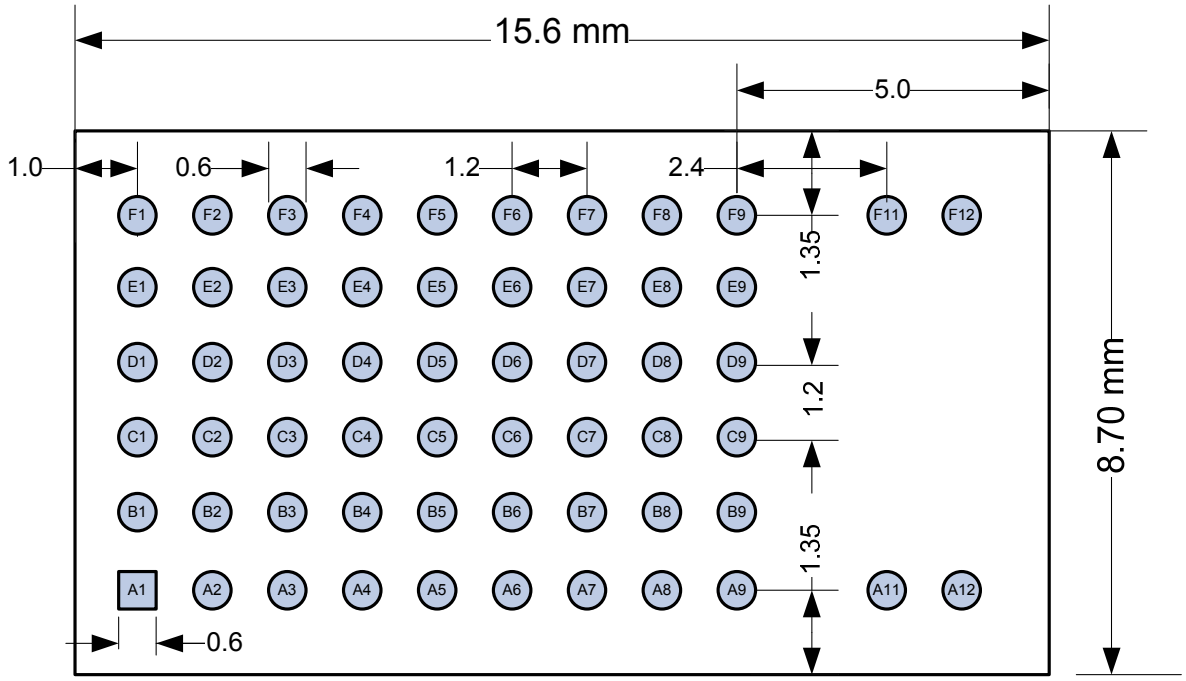




Downloaded from Elcodis.com electronic components distributor

## 19. PAN171X FOOTPRINT OF THE MODULE

All dimensions are in millimeters.
The outer dimensions have a tolerance of ± 0.2mm.

Top view, Application PCB

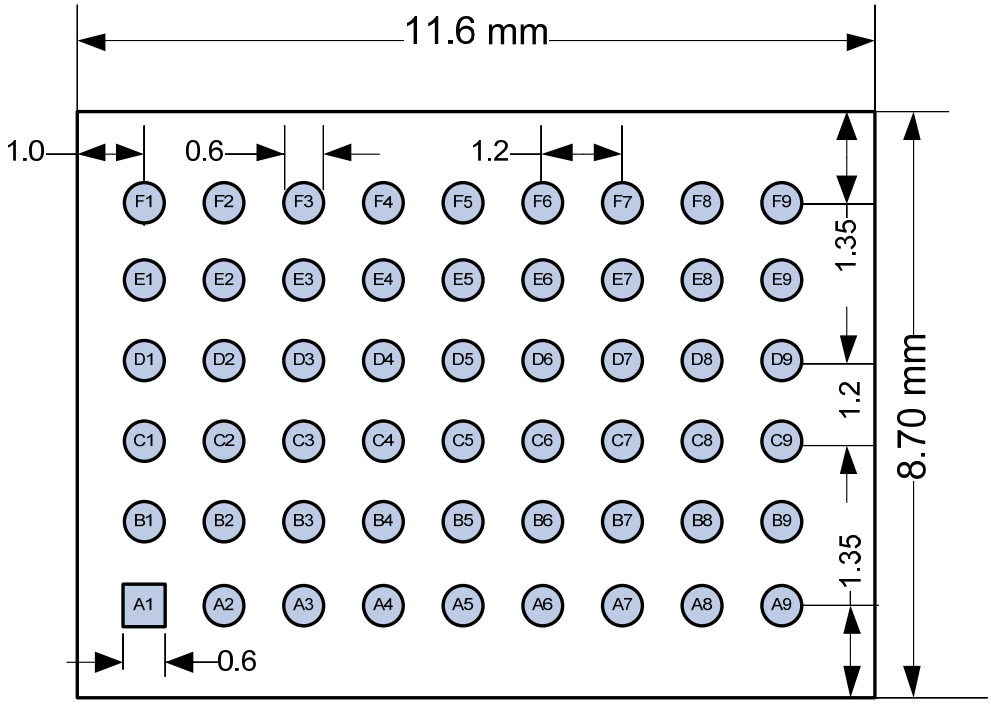





Downloaded from Elcodis.com electronic components distributor

## 20. CASE MARKING

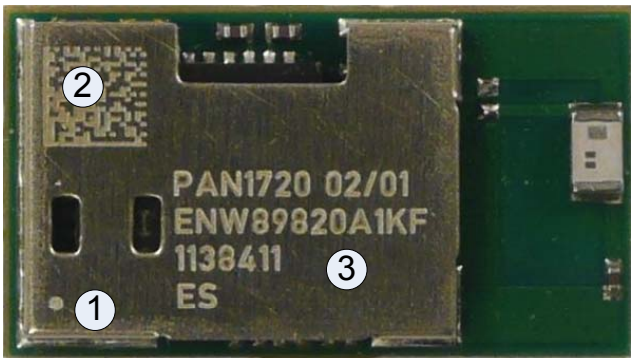


| No. | Remark |
|---|---|
| 1 | Marking for Pin 1 (Circle 0,15 mm) |
| 2 | 2D-Code, for internal usage only and can be change without any notice |
| 3 | Marking definition see below |

### 20.1. EXAMPLE FOR MARKING

| | | | | | | | | | | | | | | | | |
|---|---|---|---|---|---|---|---|---|---|---|---|---|---|---|---|---|
| P | A | N | 1 | 7 | 2 | 0 | | | H | W | / | S | W | | | |
| E | N | W | 8 | 9 | 8 | 2 | 0 | A | x | K | F | | | | | |
| Y | Y | W | W | D | L | L | | | | | | | | | | |
| F | C | C | I | D | : | | T | 7 | V | P | A | N | 1 | 7 | | |

### 20.2. MARKING DEFINITION

(1) Pin1 marking

(2) 2D code (Serial number)

(3) Marking:

- PAN17xx (Model Name), HW/SW (Hardware/Software version)
- ENW89820AxKF (Part Number, refer to chapter 26 Ordering Information)
- Lot code (YearYear, WeekWeek, Day, LotLot)
- ES (Engineering Sample marking)

Note: For available Software Versions, refer to [1] PAN172xETU Design-Guide. and chapter 26 Ordering Information.

## 21. MECHANICAL REQUIREMENTS

| No. | Item | Limit | Condition |
|---|---|---|---|
| 1 | Solderability | More than 75% of the soldering area shall be coated by solder | Reflow soldering with recommendable temperature profile |
| 2 | Resistance to soldering heat | It shall be satisfied electrical requirements and not be mechanical damage | See chapter 15.2 |




Downloaded from Elcodis.com electronic components distributor

## 22. DEVELOPMENT OF APPLICATIONS

For development support please refer to [1] PAN172xETU Design-Guide.

## 23. RELIABILITY TESTS

The measurement should be done after being exposed to room temperature and humidity for 1 hour.

| No. | Item | Limit | Condition |
|---|---|---|---|
| 1 | Vibration test | Electrical parameter should be in specification | a) Freq.:10~50Hz,Amplitude:1.5mm<br>a) 20min. / cycle,1hrs. each of XYZ axis<br>b) Freq.:30~100Hz, 6G<br>b) 20min. / cycle,1hrs. each of XYZ axis |
| 2 | Shock test | the same as above | Dropped onto hard wood from height of 50cm for 3 times |
| 3 | Heat cycle test | the same as above | -40°C for 30min. and +85°C for 30min.;<br>each temperature 300 cycles |
| 4 | Moisture test | the same as above | +60°C, 90% RH, 300h |
| 5 | Low temp. test | the same as above | -40°C, 300h |
| 6 | High temp. test | the same as above | +85°C, 300h |

## 24. CAUTIONS

Failure to follow the guidelines set forth in this document may result in degrading of the product's functions and damage to the product.

### 24.1. DESIGN NOTES

(1) Follow the conditions written in this specification, especially the control signals of this module.
(2) The supply voltage has to be free of AC ripple voltage (for example from a battery or a low noise regulator output). For noisy supply voltages, provide a decoupling circuit (for example a ferrite in series connection and a bypass capacitor to ground of at least 47uF directly at the module).
(3) This product should not be mechanically stressed when installed.
(4) Keep this product away from heat. Heat is the major cause of decreasing the life of these products.
(5) Avoid assembly and use of the target equipment in conditions where the products' temperature may exceed the maximum tolerance.
(6) The supply voltage should not be exceedingly high or reversed. It should not carry noise and/or spikes.
(7) Keep this product away from other high frequency circuits.



Downloaded from Elcodis.com electronic components distributor

## 24.2. INSTALLATION NOTES

(1) Reflow soldering is possible twice based on the conditions in chapter 15.
Set up the temperature at the soldering portion of this product according to this reflow profile.
(2) Carefully position the products so that their heat will not burn into printed circuit boards or affect the other components that are susceptible to heat.
(3) Carefully locate these products so that their temperatures will not increase due to the effects of heat generated by neighboring components.
(4) If a vinyl-covered wire comes into contact with the products, then the cover will melt and generate toxic gas, damaging the insulation. Never allow contact between the cover and these products to occur.
(5) This product should not be mechanically stressed or vibrated when reflowed.
(6) To repair the board by hand soldering, follow the conditions set forth in this chapter.
(7) Do not wash this product.
(8) Refer to the recommended pattern when designing a board.
(9) Pressing on parts of the metal cover or fastening objects to the metal will cause damage to the unit.
(10) For more details on LGA (Land Grid Arrey) soldering processes refer to the application note.

## 24.3. USAGE CONDITIONS NOTES

(1) Take measures to protect the unit against static electricity.
If pulses or other transient loads (a large load applied in a short time) are applied to the products, check and evaluate their operation befor assembly on the final products.
(2) Do not use dropped products.
(3) Do not touch, damage or soil the pins.
(4) Follow the recommended condition ratings about the power supply applied to this product.
(5) Electrode peeling strength: Do not add pressure of more than 4.9N when soldered on PCB.
(6) Pressing on parts of the metal cover or fastening objects to the metal cover will cause damage.
(7) These products are intended for general purpose and standard use in general electronic equipment, such as home appliances, office equipment, information and communication equipment.



Downloaded from Elcodis.com electronic components distributor

## 24.4. STORAGE NOTES

(1) The module should not be stressed mechanically during storage.
(2) Do not store these products in the following conditions or the performance characteristics of the product, such as RF performance will be adversely affected:
- Storage in salty air or in an environment with a high concentration of corrosive gas, such as Cl2, H2S, NH3, SO2, or NOX
- Storage in direct sunlight
- Storage in an environment where the temperature may be outside the range of 5°C to 35°C range, or where the humidity may be outside the 45 to 85% range.
- Storage of the products for more than one year after the date of delivery Storage period: Please check the adhesive strength of the embossed tape and soldering after 6 months of storage.

(3) Keep this product away from water, poisonous gas and corrosive gas.
(4) This product should not be stressed or shocked when transported.
(5) Follow the specification when stacking packed crates (max. 10).

## 24.5. SAFETY CAUTIONS

These specifications are intended to preserve the quality assurance of products and individual components.

Before use, check and evaluate the operation when mounted on your products. Abide by these specifications, without deviation when using the products. These products may short-circuit. If electrical shocks, smoke, fire, and/or accidents involving human life are anticipated when a short circuit occurs, then provide the following failsafe functions, as a minimum.

(1) Ensure the safety of the whole system by installing a protection circuit and a protection device.
(2) Ensure the safety of the whole system by installing a redundant circuit or another system to prevent a single fault causing an unsafe status.

## 24.6. OTHER CAUTIONS

(1) This specification sheet is copyrighted. Please do not disclose it to a third party.
(2) Please do not use the products for other purposes than those listed.
(3) Be sure to provide an appropriate fail-safe function on your product to prevent an additional damage that may be caused by the abnormal function or the failure of the product.
(4) This product has been manufactured without any ozone chemical controlled under the Montreal Protocol.
(5) These products are not intended for other uses, other than under the special conditions shown below. Before using these products under such special conditions, check their performance and reliability under the said special conditions carefully to determine whether or not they can be used in such a manner.
- In liquid, such as water, salt water, oil, alkali, or organic solvent, or in places where liquid may splash.
- In direct sunlight, outdoors, or in a dusty environment
- In an environment where condensation occurs.
- In an environment with a high concentration of harmful gas (e.g. salty air, HCl,



Downloaded from Elcodis.com electronic components distributor

Cl2, SO2, H2S, NH3, and NOX)

(6) If an abnormal voltage is applied due to a problem occurring in other components or circuits, replace these products with new products because they may not be able to provide normal performance even if their electronic characteristics and appearances appear satisfactory.

(7) When you have any question or uncertainty, contact Panasonic.



Downloaded from Elcodis.com electronic components distributor

## 25. PACKAGING

If the product has mass production status, indicated in chapter 28, we will deliver the module in the package which are described below.

### 25.1. PAN172X TAPE DIMENSION

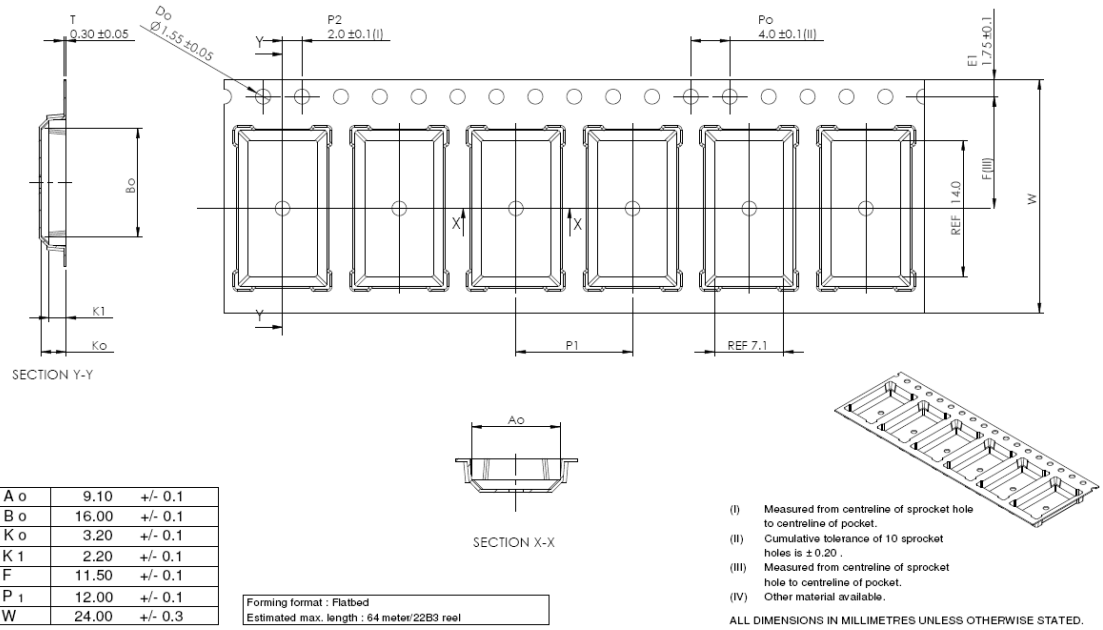


| | | |
|---|---|---|
| A o | 9.10 | +/- 0.1 |
| B o | 16.00 | +/- 0.1 |
| K o | 3.20 | +/- 0.1 |
| K 1 | 2.20 | +/- 0.1 |
| F | 11.50 | +/- 0.1 |
| P 1 | 12.00 | +/- 0.1 |
| W | 24.00 | +/- 0.3 |

Forming format : Flatbed
Estimated max. length : 64 meter/22B3 reel




Downloaded from Elcodis.com electronic components distributor

## 25.2. PAN171X TAPE DIMENSION

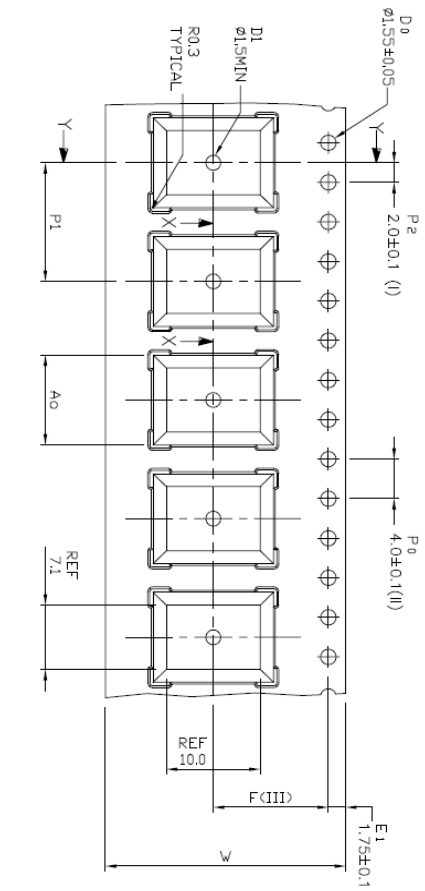


| | |
|---|---|
| Ao | 9.10 +/- 0.1 |
| Bo | 12.00 +/- 0.1 |
| Ko | 3.20 +/- 0.1 |
| K1 | 2.20 +/- 0.1 |
| F | 11.50 +/- 0.1 |
| P1 | 12.00 +/- 0.1 |
| W | 24.00 +/- 0.3 |

Forming format : Flatbed
Estimated max. length : 65 meter/2283 reel

(I) Measured from centreline of sprocket hole to centreline of pocket.
(II) Cumulative tolerance of 10 sprocket holes is ± 0.20 .
(III) Measured from centreline of sprocket hole to centreline of pocket.
(IV) Other material available.

ALL DIMENSIONS IN MILLIMETRES UNLESS OTHERWISE STATED




Downloaded from Elcodis.com electronic components distributor

## 25.3. PACKING IN TAPE

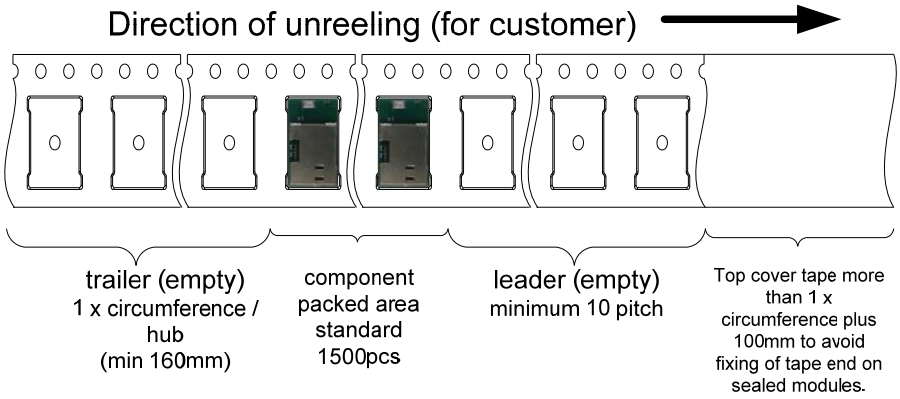


Empty spaces in component packed area shall be less than two per reel and those spaces shall not be consecutive.

Top cover tape shall not be found on reel holes and shall not stick out from reel.

## 25.4. COMPONENT DIRECTION

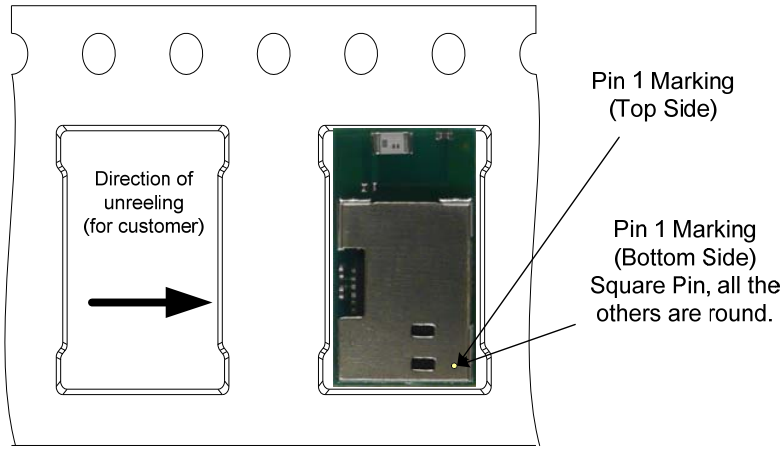




Downloaded from Elcodis.com electronic components distributor

## 25.5. REEL DIMENSION

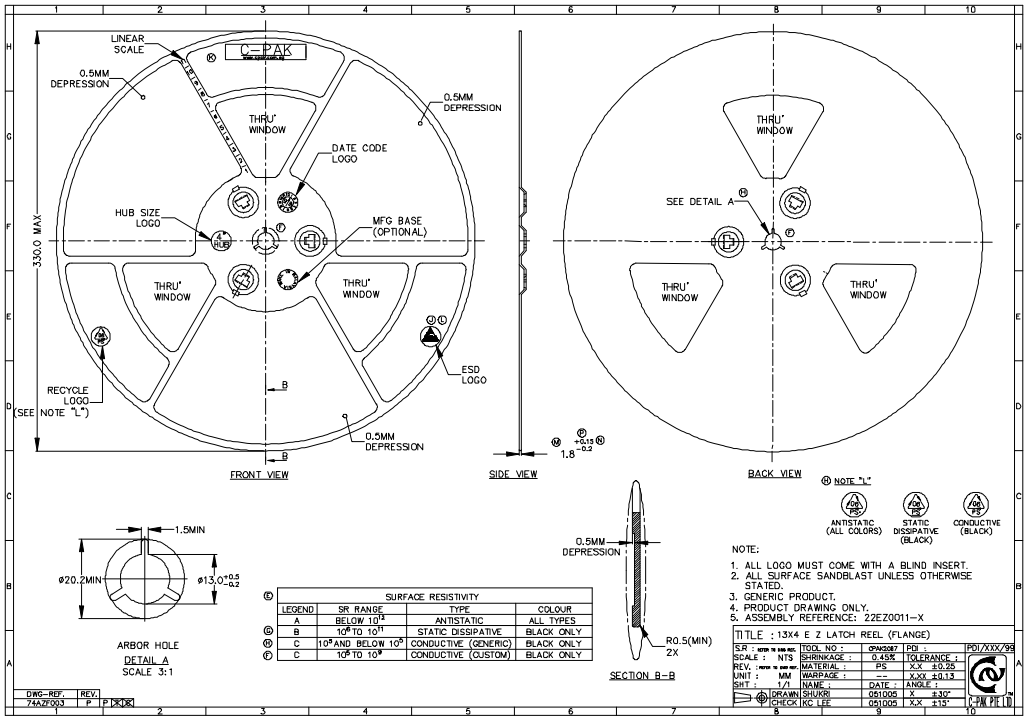





Downloaded from Elcodis.com electronic components distributor

## 25.6. LABEL FOR PACKAGE

The picture shows an example from similar product.

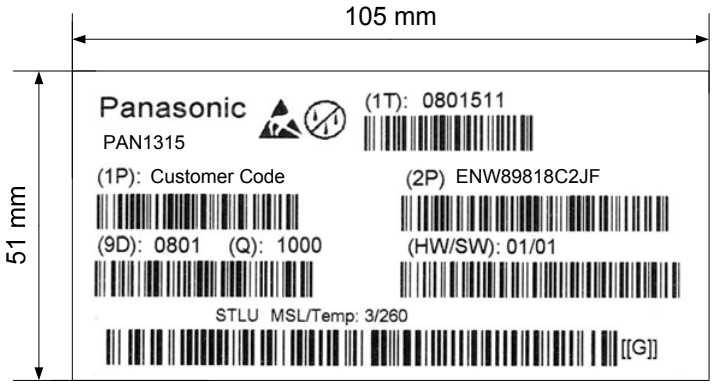


| | | | | |
|---|---|---|---|---|
| (1T) | Lot code [YYWWDLL] | | Example from above: | |
| | YY | year | printed | 08 |
| | WW | normal calendar week | printed | 01 |
| | D | day | printed | 5 (Friday) |
| | L | line identifier, if more as one | printed | 1 |
| | L | lot identifier per day | printed | 1 |
| (1P) | Customer Order Code, if any, otherwise company name will be printed | | | |
| (2P) | Panasonic Order Code: ENW89820AxKF | | | |
| (9D) | Date code as [YYWW] | | | |
| (Q) | Quantity [XXXX], variable max. 1500 | | | |
| (HW/SW) | Hardware /Software Release | | | |
| | Hardware 01 | Indicates the HW revision. | | |
| | Software 01 | Indicates the SW revision. | | |

## 25.7. TOTAL PACKAGE

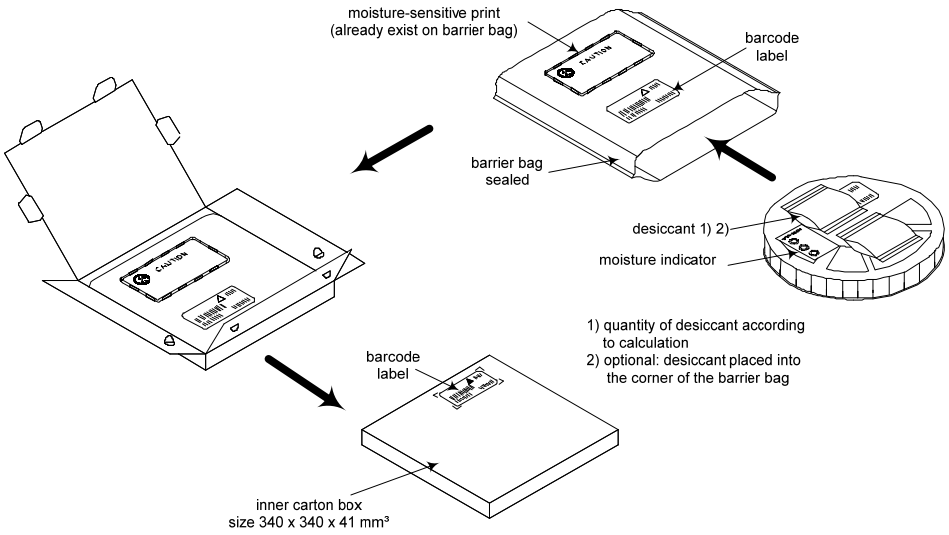





Downloaded from Elcodis.com electronic components distributor

# 26. ORDERING INFORMATION

| Ordering part number | Description | MOQ (1) |
|---|---|---|
| ENW89820A1KF (2) | PAN1720<br>CLASS 2 Bluetooth single mode Module according BT-4.0.<br>*Bluetooth*® smart device | 1500 |
| ENW89820A3KF (2) | PAN1720<br>Same as above including BlueRadios BR-SPP FW version.<br>*Bluetooth*® smart device | 1500 |
| ENW89835A1KF (2) | PAN1721<br>CLASS 2 Bluetooth single mode Module according BT-4.0.<br>*Bluetooth*® smart device | 1500 |
| ENW89835A3KF (2) | PAN1721<br>Same as above including BlueRadios BR-SPP FW version.<br>*Bluetooth*® smart device | 1500 |
| ENW89835C1KF | PAN1711<br>CLASS 2 Bluetooth single mode Module according BT-4.0.<br>*Bluetooth*® smart device **without antenna** | ES |
| ENW89835C3KF | PAN1711<br>Same as above without antenna including BlueRadios BR-SPP FW version.<br>*Bluetooth*® smart device **without antenna** | ES |

Notes:

(1) Abbreviation for Minimum Order Quantity (MOQ). The standard MOQ for mass production is 1500 pieces, fewer only on customer demand. Samples for evaluation can be delivered at any quantity via the distribution channels.

(2) Samples are available on customer demand

## 26.1. INFORMATION REGARDING SOFTWARE VERSIONS

ENW89820/35A**1**KF:

The modules will be delivered with an empty flash. Customers need to program their own TI software in the production process. For details refer to the design guide.

ENW89820/35A**3**KF:

The modules are delivered with BlueRadios nBlue software. This software includes a bootloader and can be updated over the UART. For the latest revision refer to this link: http://blueradios.com/panasonic/index.php

Note: New customers seeking firmware and firmware support are required to register by providing an invoice number.



Downloaded from Elcodis.com electronic components distributor

## 27. ROHS AND REACH DECLARATION

Hereby we declare to our best present knowledge based on declaration of our suppliers that this product follows th elatest official RoHS and REACH Directive.


**Panasonic**
Panasonic Industrial Devices Slovakia s.r.o
Oravicka 616, 020 01 TRSTENA

Tel: +421(0)43 5303 200
Fax: +421(0)43 5303 207

**Dear Customer,** **Date: 20.11.2012**

*Panasonic Industrial Devices Slovakia s.r.o.*, guarantee that:

**Directive 1907/2006 (REACH)**

Substances from the candidate lists of so called "substances of very high concern" **(SVHC)** published by **ECHA** are regular monitored if SVHC substances are contained in our products above **0.1% (w/w).**
Due to the high complexity of these substance investigations covering all of our global suppliers, this process required some time. We will provide you with all substance information regarding our products base on information collected from our suppliers.

*Panasonic Industrial Devices Slovakia s.r.o.* hereby declares that all products manufactured and delivered to your company have SVHC substances **< 0.1% (w/w).**

***SVHC Substances:***

| | | |
|---|---|---|
| SVHC Candidate list 1 | (28/10/2008) | [15 Substances] |
| SVHC Candidate list 2 | (13/01/2010) | [12 Substances] |
| SVHC Candidate list 2 | (30/03/2010) | [1 Substance] |
| SVHC Candidate list 3 | (18/06/2010) | [8 Substances] |
| SVHC Candidate list 4 | (15/12/2010) | [8 Substances] |
| SVHC Candidate list 5 | (20/06/2011) | [7 Substances] |
| SVHC Candidate list 6 | (19/12/2011) | [20 Substances] |
| SVHC Candidate list 7 | (18/06/2012) | [13 Substances] |

**Directive 2011/65/EC (RoHS)**

We confirm that all products supplied to you including package do not contain the following substances which are banned by Directive 2002/95/EC (RoHS) or if contain a maximum concentration of 0.1% by weight in homogeneous materials for:

- **Lead** and lead compounds,
- **Mercury** and mercury compounds,
- **Chromium (VI),**
- **PBB** (polybrominated biphenyl) category, **PBDE** (polybrominated biphenyl ether) category and a maximum concentration of 0.01% by weight in homogeneous materials for:
- **Cadmium** and cadmium compounds.

**Wireless Modules (ENW898*series*; ENW596*series*; ENWC9A*series*)**

| Create: | Kostalikova Alena | Check: | Firmentova Viera | Approval: | Kashiwaya Shinichi |
|---|---|---|---|---|---|
| EQ | | QA&QC | | Managing Director | |

For the most updated one, please refer to [4].




Downloaded from Elcodis.com electronic components distributor

## 28. DATA SHEET STATUS

This data sheet contains the final specification (RELEASE).

Panasonic reserves the right to make changes at any time without notice in order to improve design and supply the best possible product.

Please consult the most recently issued data sheet before initiating or completing a design.

Use this URL to search for the most recent version of this data sheet: Use this URL to search for the most recent version of this data sheet:

PAN172x Datasheet

## 29. HISTORY FOR THIS DOCUMENT

| Revision | Date | Modification / Remarks |
|---|---|---|
| 0.01 | November 2011 | 1st preliminary version. |
| 0.02 | November 2011 | Deleted footnote in chapter 13. |
| 1.00 | April 2012 | Released Version. |
| 1.1 | July 2012 | Add chapter 26.1 Information regarding Software Versions. Link to LGA app note. Removed watermark. UART pinning for BR-SW version. I2C pinning for PAN1721 version. FCC, IC, IDs. |
| 1.2 | July 2012 | Added remark "top view" for footprint. Corrected FCC ID to T7VPAN17.<br>Change to the correct company name in footer. |
| 1.3 | Agust 2012 | Change IC text in chapter 33.1<br>Change to the correct company name in footer.<br>New format for chapter Related Documents |
| 1.4 | November 2012 | Added some remarks to PAN1721 version. Added non antenna version part number to Ordering information. |
| 1.5 | December 2012 | Added PAN1711 ES information |
| 1.6 | January 2013 | Added dimensions and pinout for the non-antenna versions PAN171x. |
| 1.7 | January 2013 | Minor changes in chapter 6, 31.4. Chapter 3 was included and chapter 34 BT Certificiation was added. |

## 30. RELATED DOCUMENTS

For an update, please search in the suitable homepage.

[1] PAN172xETU Design-Guide
http://www.pideu.panasonic.de/pdf/168ApplicationNote.pdf

[2] Semiconductor Datasheet
CC2540 from Texas Instruments
CC2541 from Texas Instruments

[3] Application Note Land Grid Array
http://www.pideu.panasonic.de/pdf/184ext.pdf

[4] REACH and RoHS Certificate
http://www.pideu.panasonic.de/pdf/182ext2.jpg

[5]



Downloaded from Elcodis.com electronic components distributor

# 31. GENERAL INFORMATION

© Panasonic Industrial Devices Europe GmbH 2012.
All rights reserved.
This product description does not lodge the claim to be complete and free of mistakes.
Please contact the related product manager in every case.

If we deliver ES samples to the customer, these samples have the status Engineering Samples. This means, the design of this product is not yet concluded. Engineering Samples may be partially or fully functional, and there may be differences to be published Data Sheet.
Engineering Samples are not qualified and are not to be used for reliability testing or series production.

**Disclaimer:**
Customer acknowledges that samples may deviate from the Data Sheet and may bear defects due to their status of development and the lack of qualification mentioned above.
Panasonic rejects any liability or product warranty for Engineering Samples. In particular, Panasonic disclaims liability for damages caused by

- the use of the Engineering Sample other than for Evaluation Purposes, particularly the installation or integration in an other product to be sold by Customer,
- deviation or lapse in function of Engineering Sample,
- improper use of Engineering Samples.

Panasonic disclaimes any liability for consequential and incidental damages.
In case of any questions, please contact your local sales partner or the related product manager.

# 32. REGULATORY INFORMATION

## 32.1. FCC NOTICE

The devices PAN17xx, for details refer to Chapter 26, including the antennas, which are listed in 32.5, complies with Part 15 of the FCC Rules. The device meets the requirements for modular transmitter approval as detailed in FCC public Notice DA00-1407.transmitter Operation is subject to the following two conditions: (1) This device may not cause harmful interference, and (2) This device must accept any interference received, including interference that may cause undesired operation.

## 32.2. CAUTION

The FCC requires the user to be notified that any changes or modifications made to this device that are not expressly approved by Panasonic Industrial Devices Europe GmbH may void the user's authority to operate the equipment.

This equipment has been tested and found to comply with the limits for a Class B digital device, pursuant to Part 15 of the FCC Rules. These limits are designed to provide reasonable protection against harmful interference in a residential installation. This equipment generates, uses and can radiate radio frequency energy and, if not installed and used in accordance with the instructions, may cause harmful interference to radio communications. However, there is no guarantee that interference will not occur in a particular installation. If this equipment does cause harmful interference to radio or television reception, which can be determined by turning the equipment off and on, the user is encouraged to try to correct the interference by one or more of the following measures:



Downloaded from Elcodis.com electronic components distributor

- Reorient or relocate the receiving antenna.
- Increase the separation between the equipment and receiver.
- Connect the equipment into an outlet on a circuit different from that to which the receiver is connected.
- Consult the dealer or an experienced radio/TV technician for help

## 32.3. LABELING REQUIREMENTS

The Original Equipment Manufacturer (OEM) must ensure that FCC labeling requirements are met. This includes a clearly visible label on the outside of the OEM enclosure specifying the appropriate Panasonic FCC identifier for this product as well as the FCC Notice above. The FCC identifier are **FCC ID: T7VPAN17**. This FCC identifier is valid for all PAN17xx modules, for details, see the Chapter 26. Ordering Information.

In any case the end product must be labelled exterior with "Contains FCC ID: T7VPAN17"

## 32.4. ANTENNA WARNING

For the related part number of PAN17xx refer to Chapter 26. Ordering Information.

This devices are tested with a standard SMA connector and with the antennas listed below. When integrated in the OEMs product, these fixed antennas require installation preventing end-users from replacing them with non-approved antennas. Any antenna not in the following table must be tested to comply with FCC Section 15.203 for unique antenna connectors and Section 15.247 for emissions. The FCC identifier for this device with the antenna listed in item 1 are the same (FCC ID: T7VPAN17).

## 32.5. APPROVED ANTENNA LIST

Note: We are able to qualify your antenna and will add to this list as that process is completed.

| Item | Part Number | Manufacturer | Frequency Band | Type | Gain (dBi) |
|---|---|---|---|---|---|
| 2 | LDA212G3110K | Murata | 2.4GHz | Chip-Antenna | +0.9 |

## 32.6. RF EXPOSURE PAN17XX

To comply with FCC RF Exposure requirements, the Original Equipment Manufacturer (OEM) must ensure that the approved antenna in the previous table must be installed.

The preceding statement must be included as a CAUTION statement in manuals for products operating with the approved antennas in the previous table to alert users on FCC RF Exposure compliance.

Any notification to the end user of installation or removal instructions about the integrated radio module is not allowed.

The radiated output power of PAN17xx with mounted ceramic antenna **(FCC ID: T7VPAN17)** is far below the FCC radio frequency exposure limits. Nevertheless, the PAN17xx shall be used in such a manner that the potential for human contact during normal operation is minimized.

End users may not be provided with the module installation instructions. OEM integrators and end users must be provided with transmitter operating conditions for satisfying RF exposure compliance.



Downloaded from Elcodis.com electronic components distributor

## 33. INDUSTRY CANADA CERTIFICATION

PAN17xx is licensed to meet the regulatory requirements of Industry Canada (IC),

license: IC: 216Q-PAN17

Manufacturers of mobile, fixed or portable devices incorporating this module are advised to clarify any regulatory questions and ensure compliance for SAR and/or RF exposure limits. Users can obtain Canadian information on RF exposure and compliance from www.ic.gc.ca.

This device has been designed to operate with the antennas listed in Table 20 above, having a maximum gain of 0.9 dBi. Antennas not included in this list or having a gain greater than 0.9 dBi are strictly prohibited for use with this device. The required antenna impedance is 50 ohms. The antenna used for this transmitter must not be co-located or operating in conjunction with any other antenna or transmitter.

Due to the model size the IC identifier is displayed in the installation instruction only and can not be displayed on the modules label due to the limited size (8.7x15.6mm).

### 33.1. IC NOTICE

The devices PAN17xx, for details refer to Chapter 26, including the antennas, which are listed in 32.5, complies with Canada RSS-GEN Rules. The device meets the requirements for modular transmitter approval as detailed in RSS-GEN. Operation is subject to the following two conditions: (1) This device may not cause harmful interference, and (2) This device must accept any interference received, including interference that may cause undesired operation.

### 33.2. LABELING REQUIREMENTS

The Original Equipment Manufacturer (OEM) must ensure that IC labeling requirements are met. This includes a clearly visible label on the outside of the OEM enclosure specifying the appropriate Panasonic IC identifier for this product as well as the IC Notice above. The IC identifier is 216Q-PAN17. This IC identifier is valid for all PAN17xx modules, for details, see the Chapter 26. Ordering Information.

In any case the end product must be labelled exterior with "Contains IC: 216Q-PAN17"

## 34. BLUETOOTH CERTIFICATION

The Design is listed as Controller Subsystem with QDID: B016552

https://www.bluetooth.org/tpg/EPL_Detail.cfm?ProductID=22941

The module is listed as EPL based on Texas Instruments QDID B016552.

To create an EPL, two Subsystems e.g. QDID: B016552 and QDID: B017183 (software stack) need to be combined.



Downloaded from Elcodis.com electronic components distributor

## 35. EUROPEAN R&TTE DECLARATION OF CONFORMITY

Hereby, Panasonic Industrial Devices Europe GmbH, declares that the Bluetooth module PAN17xx and their versions is in compliance with the essential requirements and other relevant provisions of Directive 1999/5/EC. As a result of the conformity assessment procedure described in Annex III of the Directive 1999/5/EC, the end-customer equipment should be labelled as follows:

CE

PAN17xx and their versions in the specified reference design can be used in the following countries: Austria, Belgium, Cyprus, Czech Republic, Denmark, Estonia, Finland, France, Germany, Greece, Hungary, Ireland, Italy, Latvia, Lithuania, Luxembourg, Malta, Poland, Portugal, Slovakia, Slovenia, Spain, Sweden, The Netherlands, the United Kingdom, Switzerland, and Norway.

## 36. LIFE SUPPORT POLICY

This Panasonic product is not designed for use in life support appliances, devices, or systems where malfunction can reasonably be expected to result in a significant personal injury to the user, or as a critical component in any life support device or system whose failure to perform can be reasonably expected to cause the failure of the life support device or system, or to affect its safety or effectiveness. Panasonic customers using or selling these products for use in such applications do so at their own risk and agree to fully indemnify Panasonic for any damages resulting.



Downloaded from Elcodis.com electronic components distributor