SD-84729-003

PART NO.	LENGTH
847290003	152mm (0' 6")
847290004	810mm (2' 7.88")
847290005	1310mm (4' 3.57")
847290006	2080mm (6' 9.89")
847290007	3330mm (10' 11.10")
847290008	5000mm (16' 4.85")

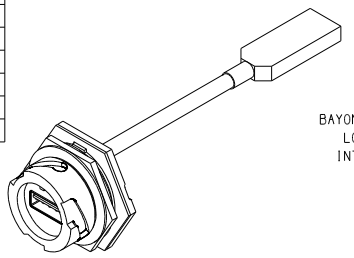

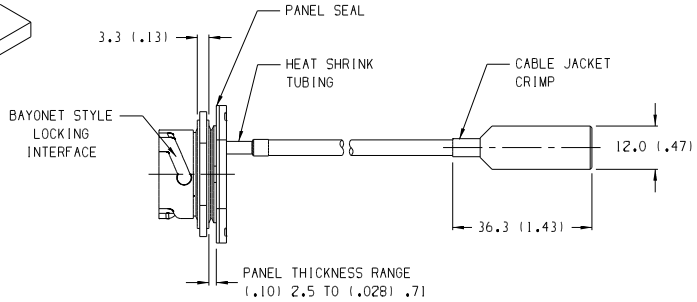

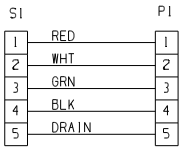

WIRING DIAGRAM

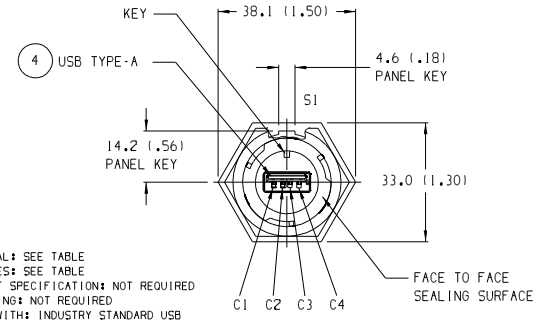

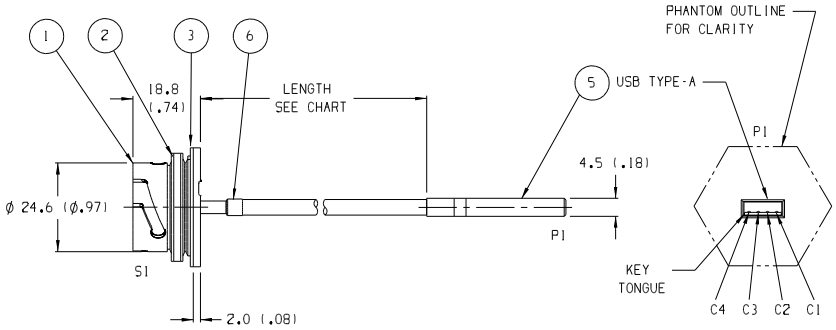

NOTES:

1. MATERIAL: SEE TABLE
2. FINISHES: SEE TABLE
3. PRODUCT SPECIFICATION: NOT REQUIRED
4. PACKAGING: NOT REQUIRED
5. MATES WITH: INDUSTRY STANDARD USB TYPE-A JACK AND W/BAYONET LOCK.
6. FORMERLY DWG #SK-01-18-05-SD.

ITEM	QTY.	DESCRIPTION	MATERIAL	FINISH
6	A/R	HEAT SHRINK TUBING	-	BLACK
5	1	USB TYPE-A SHIELDED PLUG PIGTAIL	POLYESTER	BLACK
4	1	USB TYPE-A SHIELDED I/O RECEPTACLE	POLYESTER	BLACK
3	1	PANEL GASKET	NEOPRENE	BLACK
2	1	LOCK NUT	POLYESTER	BLACK
1	1	RECEPTACLE HOUSING	POLYESTER	BLACK

EC NO. 01-27-05
DRWN: RELEASED
CH'K: S. GILBERT
APPR:
REV: A

DESCRIPTION

QUALITY SYMBOLS: MAJOR; CRITICAL (C); SPC (S)

GENERAL TOLERANCES: (UNLESS SPECIFIED)

	mm	INCH
4 PLACES		±.0015
3 PLACES	±.038	±.005
2 PLACES	±.13	±.01
1 PLACE	±.3	
ANGULAR:	±2°	

DRAFT WHERE APPLICABLE MUST REMAIN WITHIN DIMENSIONS

SCALE: FULL
DESIGN UNITS: ☐ mm ☒ INCH
THIRD ANGLE PROJECTION

DRAWN BY & DATE: S. GILBERT 01-18-05
CHECKED BY & DATE: -
APPROVED BY & DATE: -
CAD FILENAME: SD-84729-003

PROJECT NO. 04-069 | 1 | -
DIMENSIONS: ☒ mm/INCH ☐ INCH/mm ☐ mm ONLY | SHT | REV
REVISE ON CAD ONLY

TITLE: USB TYPE-A RECEPTACLE, PANEL MOUNT CORD WITH USB TYPE-A PLUG

MOLEX INCORPORATED

MATERIAL NO.: SEE CHART
DRAWING NO.: SD-84729-003
SHEET NO.: 1 OF 1
SIZE: B

THIS DRAWING CONTAINS INFORMATION THAT IS PROPRIETARY TO MOLEX INCORPORATED AND SHOULD NOT BE USED WITHOUT WRITTEN PERMISSION.

Downloaded from Elcodis.com electronic components distributor