NOTES :

1. MATERIAL :
   HOUSING : (a) HIGH TEMP. NYLON ,GLASS FIBER FILLED,UL94V-0, COLOR: BLACK.
   (b) POLYESTER , GLASS FIBER FILLED,UL94V-0, COLOR: WHITE.
   TERMINAL : PHOSPHOR BRONZE
   METAL SHELL : COPPER ALLOY

2. PLATING :
   TERMINAL :
   CONTACT AREA : (a) GOLD FLASH.
   (b) GLOD (Au), THICKNESS = 30 MICROINCH MINIMUM. /0.76 MICROMETER MINIMUM.
   SOLDER TAIL :
   PURE TIN(Sn) THICKNESS= 75 MICROINCH MINIMUM . /1.9 MICROMETER MINIMUM.
   UNDER PLATE : NICKEL (NI), THICKNESS= 50 MICROINCH MINIMUM. /1.27 MICROMETER MINIMUM.
   METAL SHELL :
   PURE TIN(Sn) , THICKNESS= 50 MICROINCH MINIMUM. / 1.27 MICROMETER MINIMUM.
   UNDER PLATE : NICKEL (NI) , THICKNESS= 50 MICROINCH MINIMUM. /1.27 MICROMETER MINIMUM.

3. DATUM AND BASIC DIMENSIONS ESTABLISHED BY CUSTOMER
   RECOMMENDED PCB THICKNESS : 1.60±0.05

4. PRODUCT SPECIFICATION : REFER TO PS-67998-0000

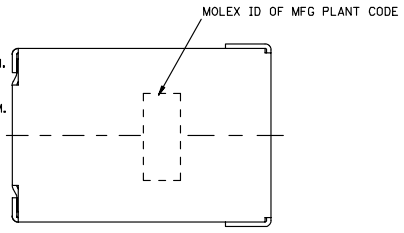

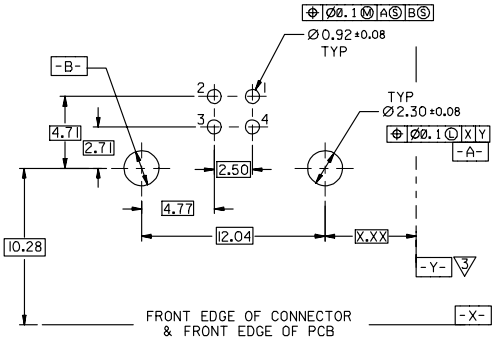

RECOMMENDED PCB LAYOUT

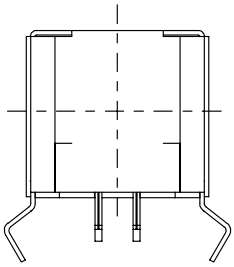

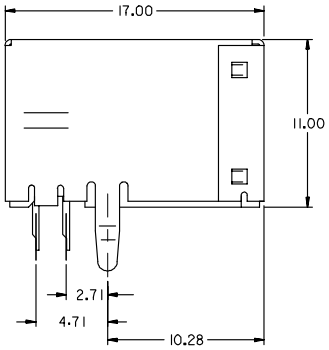

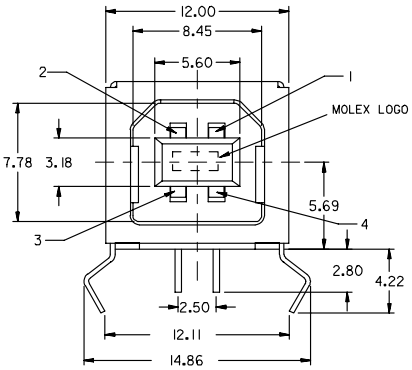

PART NUMBER LEGEND:

67068- * * 0 *

- 8 : BLACK HOUSING
- 9 : WHITE HOUSING
- 0 : TRAY PACKAGING
- 1 : TUBE PACKAGING
- KINK TYPE BOARD LOCK
- 0 : GOLD FLASH
- 1 : 0.76 MICROMETER/30 MICROINCH GOLD

REV	DESCRIPTION
A	NEW RELEADE EC NO: SH2005-0142 DRWN: DAVID HU 2004/11/5 CHKD:HARVEY 2004/11/25 APPR:YTYAP 2004/11/25

QUALITY SYMBOLS: ▼=0 ▽=0

GENERAL TOLERANCES (UNLESS SPECIFIED)

	mm	INCH
4 PLACES	± ---	± ---
3 PLACES	± ---	± ---
2 PLACES	± 0.25	± ---
1 PLACE	± 0.25	± ---
ANGULAR ± 3 °		

DRAFT WHERE APPLICABLE MUST REMAIN WITHIN DIMENSIONS

DIMENSION STYLE	MM ONLY
SCALE	4:1
DESIGN UNITS	METRIC
	THIRD ANGLE PROJECTION
DRAWN BY	DAVID HU
DATE	2004/11/05
CHECKED BY	HARVEY
DATE	2004/11/05
APPROVED BY	
DATE	
TITLE	USB B TYPE CONNECTOR KINK TYPE BOARD LOCK (LEAD-FREE)
	MOLEX INCORPORATED
MATERIAL NO.	SEE NOTES
DOCUMENT NO.	SD-67068-003
SHEET NO.	1 OF 4
SIZE	A3

THIS DRAWING CONTAINS INFORMATION THAT IS PROPRIETARY TO MOLEX INCORPORATED AND SHOULD NOT BE USED WITHOUT WRITTEN PERMISSION

tb_frame_A3_P_AM_T
Rev. D 2004/06/28

Downloaded from Elcodis.com electronic components distributor

NOTES :

1. MATERIAL :
   HOUSING : (a) HIGH TEMP. NYLON, GLASS FIBER FILLED,UL94V-0, COLOR: BLACK,
   (b) POLYESTER , GLASS FIBER FILLED,UL94V-0, COLOR: WHITE,
   TERMINAL : PHOSPHOR BRONZE
   METAL SHELL : COPPER ALLOY

2. PLATING :
   TERMINAL :
   CONTACT AREA : (a) GOLD FLASH.
   (b) GLOD (Au), THICKNESS = 30 MICROINCH MINIMUM. /0.76 MICROMETER MINIMUM.
   SOLDER TAIL :
   PURE TIN(Sn) THICKNESS= 75 MICROINCH MINIMUM . /1.9 MICROMETER MINIMUM.
   UNDER PLATE : NICKEL (NI), THICKNESS= 50 MICROINCH MINIMUM. /1.27 MICROMETER MINIMUM.
   METAL SHELL :
   PURE TIN(Sn) THICKNESS= 50 MICROINCH MINIMUM. /1.27 MICROMETER MINIMUM.
   UNDER PLATE : NICKEL (NI) , THICKNESS= 50 MICROINCH MINIMUM. /1.27 MICROMETER MINIMUM.

3 DATUM AND BASIC DIMENSIONS ESTABLISHED BY CUSTOMER
   RECOMMENDED PCB THICKNESS : 1.60±0.05

4 PRODUCT SPECIFICATION : REFER TO PS-67998-0000

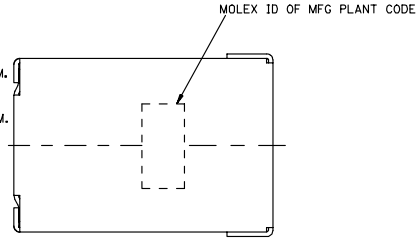

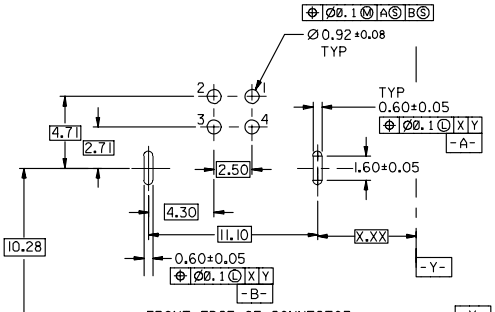

RECOMMENDED PCB LAYOUT

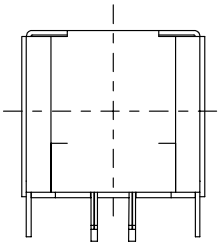

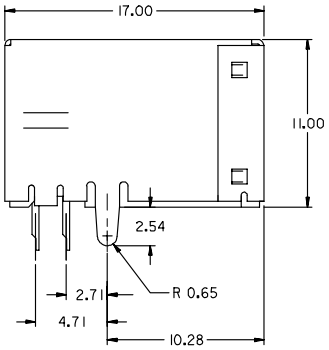

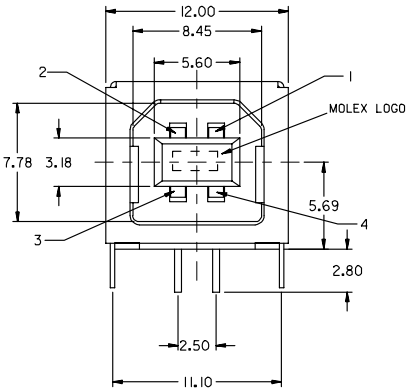

PART NUMBER LEGEND:

67068- * * | *

8 : BLACK HOUSING
9 : WHITE HOUSING

0 : TRAY PACKAGING
1 : TUBE PACKAGING

0 : GOLD FLASH
1 : 0.76 MICROMETER/30 MICROINCH GOLD

STRAIGHT TAB

NEW RELEASE	EC NO: SH2005-0142	DRWN: DAVID HU 2004/11/5	CHKD:HARVEY 2004/11/25	APPR:YTYAP 2004/11/25	DESCRIPTION	REV A

QUALITY SYMBOLS: ▼=0 ◇=0

GENERAL TOLERANCES (UNLESS SPECIFIED)

	mm	INCH
4 PLACES	± ---	± ---
3 PLACES	± ---	± ---
2 PLACES	± 0.25	± ---
1 PLACE	± 0.25	± ---
ANGULAR ± 3 °		

DRAFT WHERE APPLICABLE MUST REMAIN WITHIN DIMENSIONS

DIMENSION STYLE: MM ONLY
SCALE: 4:1
DESIGN UNITS: METRIC
THIRD ANGLE PROJECTION

DRAWN BY: DAVID HU DATE: 2004/11/05
CHECKED BY: 2004/11/05 DATE: 2004/11/05
APPROVED BY: DATE:

TITLE: USB B TYPE CONNECTOR WITH STRAIGHT TAB (LEAD-FREE)

molex MOLEX INCORPORATED

MATERIAL NO.: SEE NOTES
DOCUMENT NO.: SD-67068-003
SHEET NO.: 2
SIZE: A3

THIS DRAWING CONTAINS INFORMATION THAT IS PROPRIETARY TO MOLEX INCORPORATED AND SHOULD NOT BE USED WITHOUT WRITTEN PERMISSION

tb_frame_A3_P_AM_T
Rev. D 2004/06/28

Downloaded from Elcodis.com electronic components distributor

NOTES :

1. MATERIAL :
   HOUSING : (a) HIGH TEMP. NYLON, GLASS FIBER FILLED,UL94V-0, COLOR: BLACK,

   TERMINAL : PHOSPHOR BRONZE
   METAL SHELL : COPPER ALLOY

2. PLATING :
   TERMINAL :
   CONTACT AREA : (a) GOLD FLASH.
   (b) GLOD (Au), THICKNESS = 30 MICROINCH MINIMUM.
   /0.76 MICROMETER MINIMUM.
   SOLDER TAIL :
   PURE TIN(Sn) THICKNESS= 75 MICROINCH MINIMUM .
   /1.9 MICROMETER MINIMUM.
   UNDER PLATE : NICKEL (NI), THICKNESS= 50 MICROINCH MINIMUM.
   /1.27 MICROMETER MINIMUM.
   METAL SHELL :
   PURE TIN(SN), THICKNESS= 50 MICROINCH MINIMUM.
   /1.27 MICROMETER MINIMUM.
   UNDER PLATE : NICKEL (NI) , THICKNESS= 50 MICROINCH MINIMUM.
   /1.27 MICROMETER MINIMUM.

3 DATUM AND BASIC DIMENSIONS ESTABLISHED BY CUSTOMER
   RECOMMENDED PCB THICKNESS : 1.60±0.05

4 PRODUCT SPECIFICATION : REFER TO PS-67998-0000

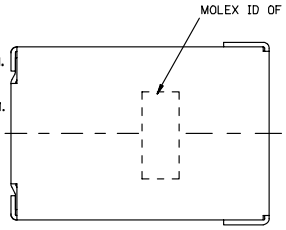

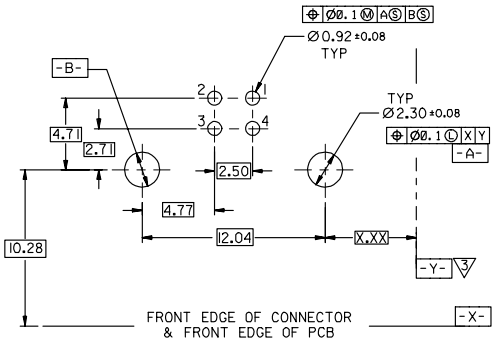

RECOMMENDED PCB LAYOUT

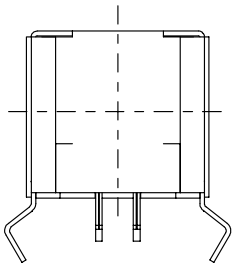

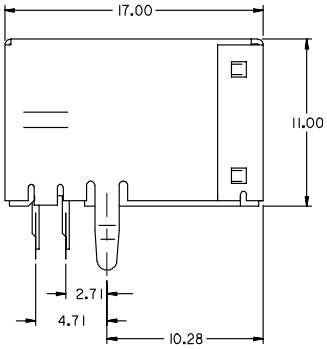

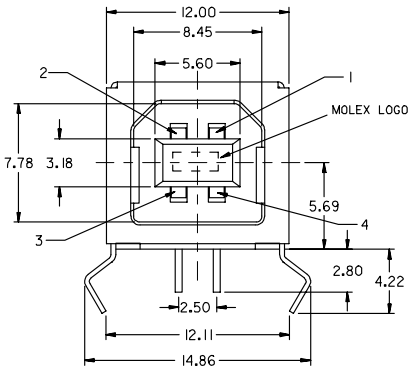

PART NUMBER LEGEND:

67068- 7041

LTR	REVISION RECORD	ECN	DR	DATE
A	NEW RELEASE FOR LEAD-FREE		DAVID HU	2004/11/5

REVISE ONLY ON CAD SYSTEM

MATERIAL : SEE NOTES
FINISH : SEE NOTES
WIRE RANGE :
INS. RANGE :
DRAWN BY 2004/11/5 DAVID HU
CHK'D BY
APPR'D BY
SCALE 4 : 1

MOLEX TAIWAN LTD.
SHEET 3 OF 4

GENERAL TOLERANCES
ANGLE : ± 3° DIM : ± .25/.010

ENG. NO.: SD-67068-003
REV A

TITLE : HIGH TEMP.USB B TYPE CONNECTOR KINK TYPE BOARD LOCK (LEAD-FREE)

ENG. NO
EDP NO.
SIMILAR ITEM
CAD FILE :
DO NOT SCALE DRAWING

THIS DRAWING CONTAINS INFORMATION THAT IS PROPRIETARY TO MOLEX (FEML) AND SHOULD NOT BE USED WITHOUT WRITTEN PERMISSION

MXT , Sa - 13

Downloaded from Elcodis.com electronic components distributor

NOTES :

1. MATERIAL :
   HOUSING : (a) HIGH TEMP. NYLON, GLASS FIBER FILLED,UL94V-0, COLOR: BLACK,

   TERMINAL : PHOSPHOR BRONZE
   METAL SHELL : COPPER ALLOY

2. PLATING :
   TERMINAL :
   CONTACT AREA : (a) GOLD FLASH.
   (b) GLOD (Au), THICKNESS = 30 MICROINCH MINIMUM.
   /0.76 MICROMETER MINIMUM.
   SOLDER TAIL :
   PURE TIN(Sn) THICKNESS= 75 MICROINCH MINIMUM .
   /1.9 MICROMETER MINIMUM.
   UNDER PLATE : NICKEL (NI), THICKNESS= 50 MICROINCH MINIMUM.
   /1.27 MICROMETER MINIMUM.
   METAL SHELL :
   PURE TIN(SN) THICKNESS= 50 MICROINCH MINIMUM.
   /1.27 MICROMETER MINIMUM.
   UNDER PLATE : NICKEL (NI) , THICKNESS= 50 MICROINCH MINIMUM.
   /1.27 MICROMETER MINIMUM.
3. DATUM AND BASIC DIMENSIONS ESTABLISHED BY CUSTOMER
   RECOMMENDED PCB THICKNESS : 1.60±0.05
4. PRODUCT SPECIFICATION : REFER TO PS-67998-0000

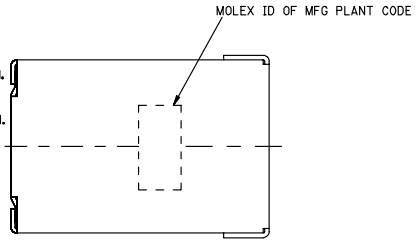

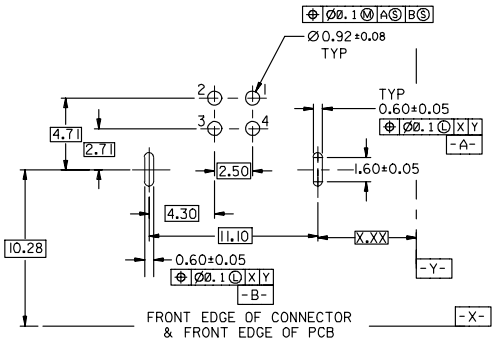

RECOMMENDED PCB LAYOUT

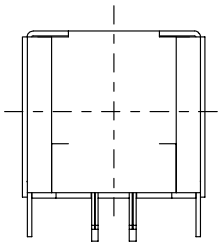

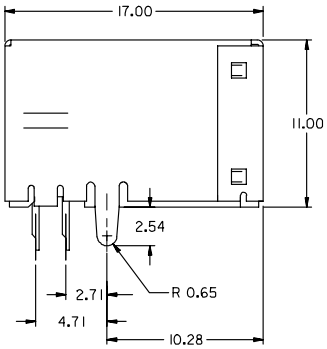

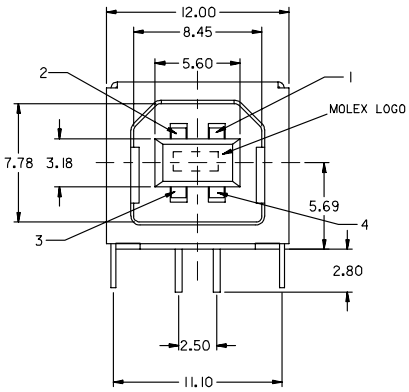

PART NUMBER LEGEND:

67068- 7051

LTR	REVISION RECORD	ECN	DR	DATE
A	NEW RELEASE FOR LEAD-FREE		DAVID HU	2004/11/5

REVISE ONLY ON CAD SYSTEM

MATERIAL : SEE NOTES
FINISH : SEE NOTES
WIRE RANGE :
INS. RANGE :
DRAWN BY 2004/11/5 DAVID HU
CHK'D BY
APPR'D BY
SCALE 4 : 1

MOLEX TAIWAN LTD.
SHEET 4 OF 4

GENERAL TOLERANCES
ANGLE : ± 3° DIM : ± .25/.010

ENG. NO.: SD-67068-003
REV A

TITLE : HIGH TEMP,USB B TYPE CONNECTOR WITH STRAIGHT TAB (LEAD-FREE)

ENG. NO SDA-67068-****
EDP NO.
SIMILAR ITEM
CAD FILE : S6706802
DO NOT SCALE DRAWING

THIS DRAWING CONTAINS INFORMATION THAT IS PROPRIETARY TO MOLEX (FEML) AND SHOULD NOT BE USED WITHOUT WRITTEN PERMISSION

MXT , Sa - 13

Downloaded from Elcodis.com electronic components distributor

NOTES:

1.MATERIAL:

HOUSING:

(a)HIGH TEMP,NYLON,GLASS FIBRE FILLED,UL94V-0,COLOR: 8:BALCK

(b)POLYESTER(PBT),30% GLASS FIBER FILLED,UL94V-0,COLOR: 9:WHITE

TERMINAL: PHOSPHOR BRONZE

METAL SHELL: COPPER ALLOY

2.PLATING:

TEMNAL:

(c)GOLD FLASH ON CONTACT AREA,75 MICROINCH MINIMUM PURE TIN(Sn) ON SOLDER TAIL,UNDER 50 MICROINCH MINIMUM NICKEL(Ni) PLATE.

(d)30 MICROINCH MINIMUM GOLD(Au) ON CONTACT AREA,75 MICROINCH MINIMUM PURE TIN(Sn) ON SOLDER TAIL,UNDER 50 MICROINCH MINIMUM NICKEL(Ni) PLATE.

(e)GOLD FLASH ON CONTACT AREA,75 MICROINCH MINIMUM MATTE TIN(Sn) ON SOLDER TAIL,UNDER 50 MICROINCH MINIMUM NICKEL(Ni) PLATE.

(f)30 MICROINCH MINIMUM GOLD(Au) ON CONTACT AREA,75 MICROINCH MINIMUM MATTE TIN(Sn) ON SOLDER TAIL,UNDER 50 MICROINCH MINIMUM NICKEL(Ni) PLATE.

METAL SHELL:

(g)50 MICROINCH MINIMUM PURE TIN(Sn),UNDER 50 MICROINCH MINIMUM NICKEL(Ni) PLATE.

(h)50 MICROINCH MINIMUM MATTE TIN(Sn),UNDER 50 MICROINCH MINIMUM NICKEL(Ni) PLATE.

3.DATUM AND BASIC DIMENSIONS ESTABLISHED BY CUSTOMER.

RECOMMENDED PCB THICKNESS : 1.60±0.05

4.PRODUCT SPECIFICATION : REFER TO PS-67998-0000

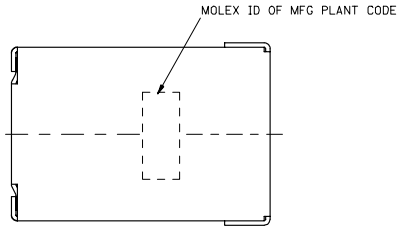

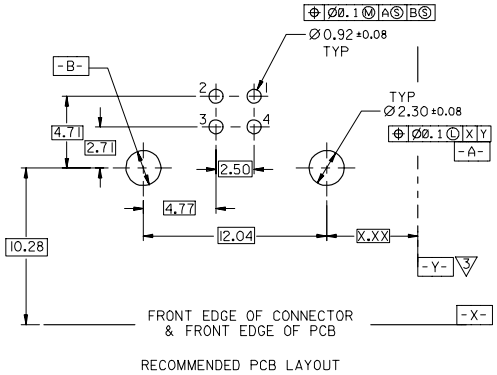

RECOMMENDED PCB LAYOUT

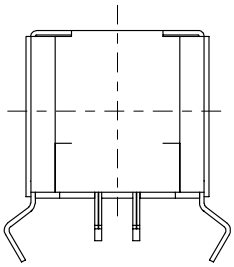

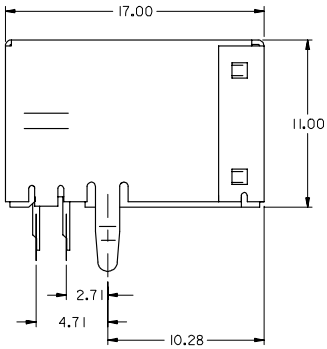

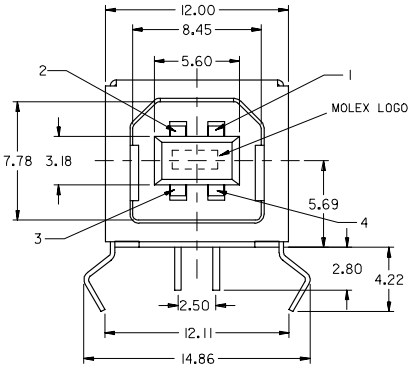

P/N	HOUSING COLOR	PLATING
67068-8000	BLACK	GOLD FLASH SEE NOTES[2-(c),2-(g)]
67068-8001	BLACK	30MICROINCH Au SEE NOTES[2-(d),2-(g)]
67068-9000	WHITE	GOLD FLASH SEE NOTES[2-(c),2-(g)]
67068-9001	WHITE	30MICROINCH Au SEE NOTES[2-(d),2-(g)]
67068-8012 B	BLACK	30MICROINCH Au SEE NOTES[2-(f),2-(h)]
67068-8013 B	BLACK	GOLD FLASH SEE NOTES[2-(e),2-(h)]

REV	DESCRIPTION
B	REVISED EC NO: SH2007-0468 2007/01/19 DRWN:HYHE01 2007/01/19 CH'KD:IWANG 2007/01/19 APPR: JNCHEN 2007/01/26

QUALITY SYMBOLS: ▼=0 ▽C=0

GENERAL TOLERANCES (UNLESS SPECIFIED)

	mm	INCH
4 PLACES	± ---	± ---
3 PLACES	± ---	± ---
2 PLACES	± 0.25	± .010
1 PLACE	± 0.25	± .010
ANGULAR ± 3 °		

DRAFT WHERE APPLICABLE MUST REMAIN WITHIN DIMENSIONS

DIMENSION STYLE: MM ONLY

SCALE: 4:1

DESIGN UNITS: METRIC

THIRD ANGLE PROJECTION

DRAWN BY: DAVID HU DATE: 2004/11/05

CHECKED BY: HARVEY DATE: 2004/11/05

APPROVED BY: DATE:

TITLE: USB B TYPE CONNECTOR LEAD-FREE

molex MOLEX INCORPORATED

MATERIAL NO.: SEE NOTES

DOCUMENT NO.: SD-67068-004

SHEET NO.: 1 OF 1

SIZE: A3

THIS DRAWING CONTAINS INFORMATION THAT IS PROPRIETARY TO MOLEX INCORPORATED AND SHOULD NOT BE USED WITHOUT WRITTEN PERMISSION

tb_frame_A3_P_AM_T
Rev. E 2006/04/15

Downloaded from Elcodis.com electronic components distributor