SIEMENS

Microcomputer Components

16-Bit CMOS Single-Chip Microcontroller

C161V/C161K/C161O

Data Sheet 03.97 Preliminary

http://www.siemens.de/
Semiconductor/

SIEMENS

C166-Family of High-Performance CMOS 16-Bit Microcontrollers

C161

Preliminary

C161V, C161K, C161O 16-Bit Microcontrollers

- High Performance 16-bit CPU with 4-Stage Pipeline
- 125 ns Instruction Cycle Time at 16-MHz CPU Clock
- 625 ns Multiplication (16 × 16 bits), 1,25 µs Division (32 / 16 bit)
- Enhanced Boolean Bit Manipulation Facilities
- Additional Instructions to Support HLL and Operating Systems
- Register-Based Design with Multiple Variable Register Banks
- Single-Cycle Context Switching Support
- Clock Generation via Prescaler or via Direct Clock Input
- Up to 4 MBytes Linear Address Space for Code and Data
- 1 KByte On-Chip RAM on C161V and C161K, 2 KBytes On-Chip RAM on C161O
- Programmable External Bus Characteristics for Different Address Ranges
- 8-Bit or 16-Bit External Data Bus
- Multiplexed or Demultiplexed External Address/Data Buses (MUX Bus only on C161V)
- Programmable Chip-Select Signals (not on C161V)
- 1024 Bytes On-Chip Special Function Register Area
- Idle and Power Down Modes (not on C161V)
- 8-Channel Interrupt-Driven Single-Cycle Data Transfer Facilities via Peripheral Event Controller (PEC)
- 16-Priority-Level Interrupt System with 14 Sources on C161V, 20 Sources on C161K, C161O
- Multi-Functional General Purpose Timer Unit(s)
- Synchronous/Asynchronous Serial Channel
- High-Speed-Synchronous Serial Channel
- Programmable Watchdog Timer
- Up to 63 General Purpose I/O Lines
- Supported by a Large Range of Development Tools like C-Compilers, Macro-Assembler Packages, Emulators, Evaluation Boards, HLL-Debuggers, Simulators, Logic Analyzer Disassemblers, Programming Boards
- Ambient Temperature Range 0 to 70 °C
- 80-Pin MQFP Package (0.65 mm pitch)

This document describes the **SAB-C161V-L16M**, the **SAB-C161K-L16M** and the **SAB-C161O-L16M**.
For simplicity all versions are referred to by the term **C161** throughout this document whenever possible.

Introduction

The C161 is a new derivative of the Siemens SAB 80C166 family of single-chip CMOS microcontrollers. It combines high CPU performance (up to 8 million instructions per second) with high peripheral functionality and enhanced IO-capabilities. The C161 derivatives are especially suited for cost sensitive applications.

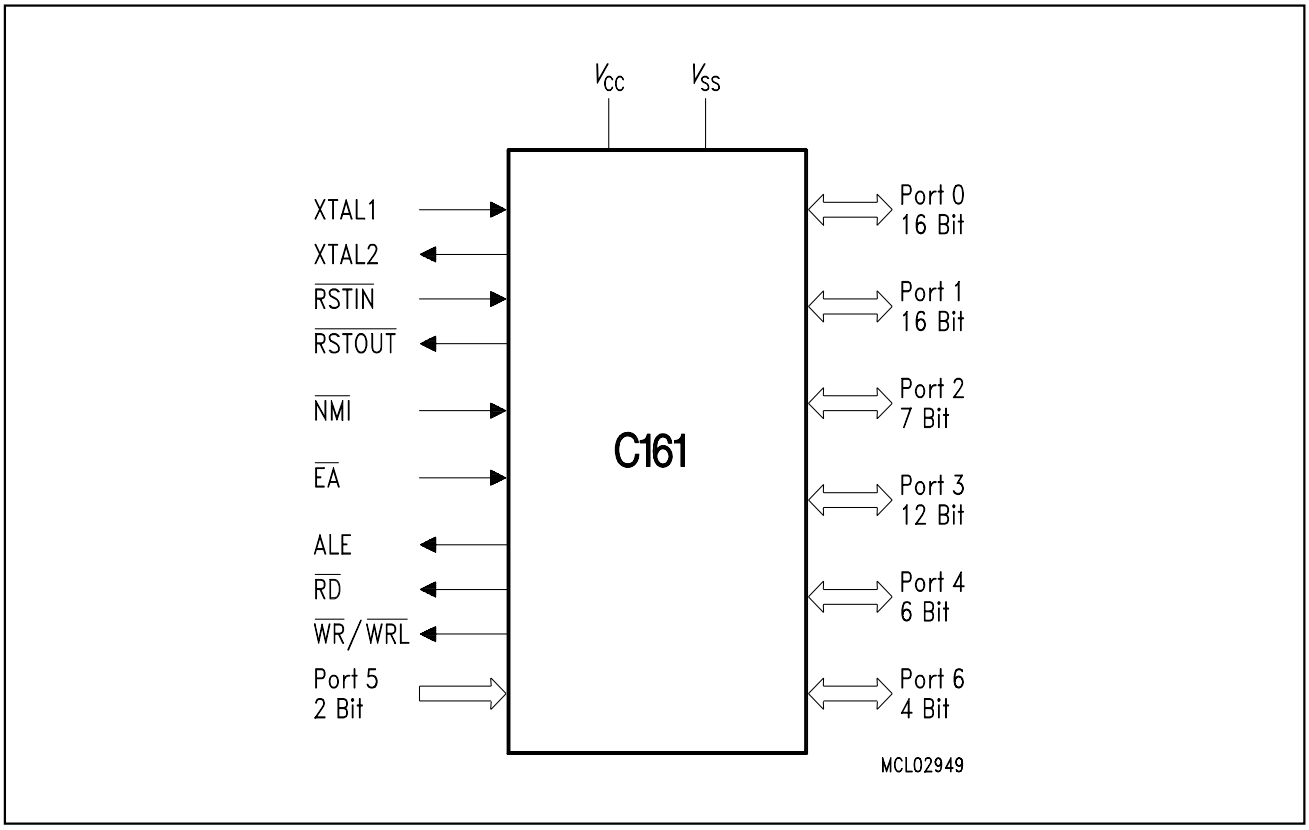

Figure 1
Logic Symbol

Ordering Information

Type	Ordering Code	Package	Function
SAB-C161V-L16M	Q67121-C1007	P-MQFP-80-1	16-bit microcontroller with 1 KByte RAM Temperature range 0 to +70 °C
SAB-C161K-L16M	Q67121-C1060	P-MQFP-80-1	16-bit microcontroller with 1 KByte RAM Temperature range 0 to +70 °C
SAB-C161O-L16M	Q67121-C1061	P-MQFP-80-1	16-bit microcontroller with 2 KByte RAM Temperature range 0 to +70 °C

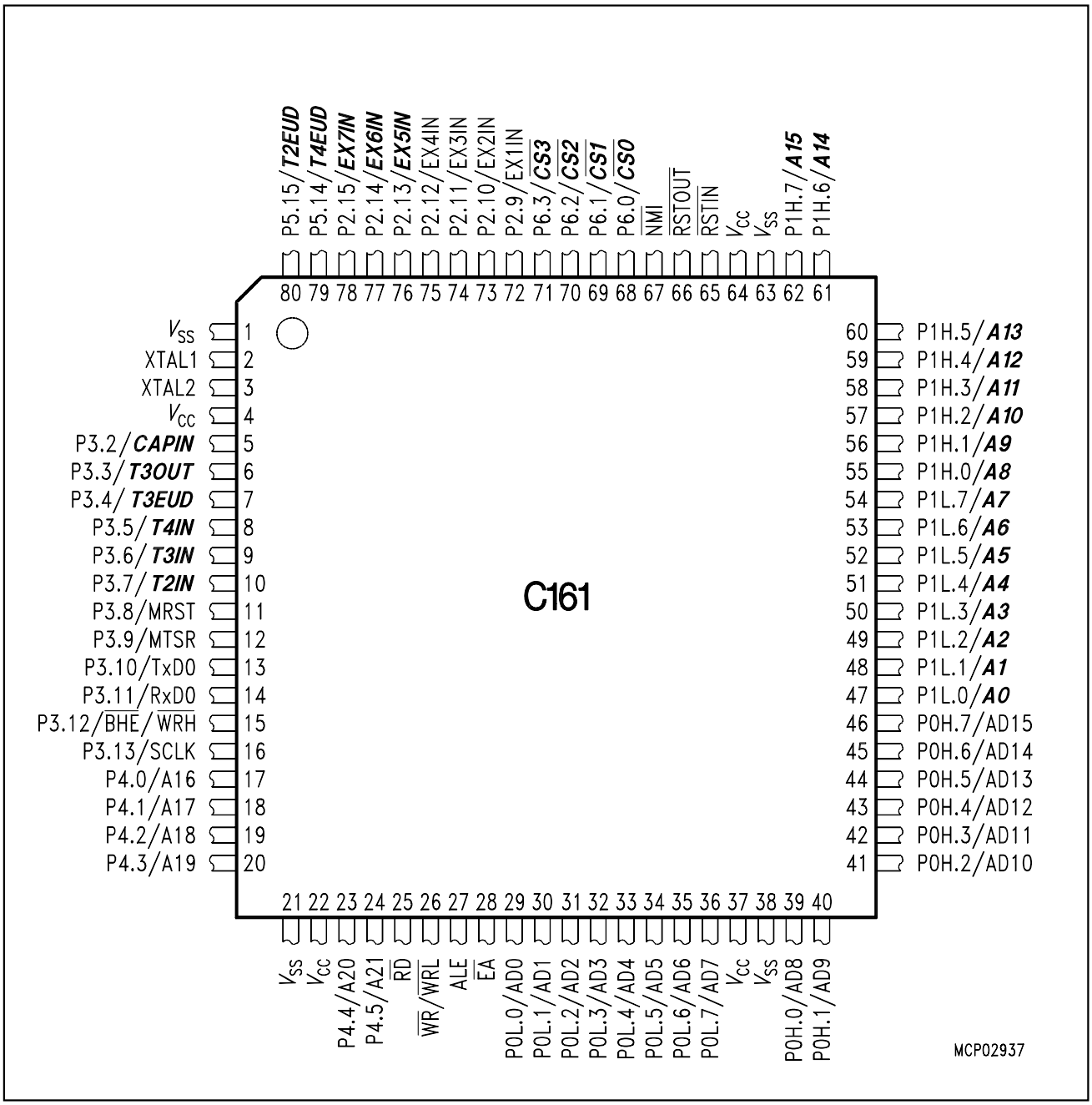

Figure 2
Pin Configuration Square MQFP-80 Package (top view)

Note: The ***marked*** signals are not available on all C161 derivatives. Please refer to the detailed description below.

Pin Definitions and Functions

Symbol	Pin Number	Input Output	Function
XTAL1	2	I	XTAL1: Input to the oscillator amplifier and input to the internal clock generator
XTAL2	3	O	XTAL2: Output of the oscillator amplifier circuit. To clock the device from an external source, drive XTAL1, while leaving XTAL2 unconnected. Minimum and maximum high/low and rise/fall times specified in the AC Characteristics must be observed.
P3.2 – P3.13	5 – 16	I/O I/O	Port 3 is a 12-bit bidirectional I/O port. It is bit-wise programmable for input or output via direction bits. For a pin configured as input, the output driver is put into high-impedance state. The following Port 3 pins also serve for alternate functions:
	5	I	P3.2 CAPIN GPT2 Register CAPREL Capture Input *This function is only available on the C161O.*
	6 7 8 9 10	O I I I I	P3.3 T3OUT GPT1 Timer T3 Toggle Latch Output P3.4 T3EUD GPT1 Timer T3 Ext.Up/Down Ctrl.Input P3.5 T4IN GPT1 Timer T4 Input for Count/Gate/Reload/Capture P3.6 T3IN GPT1 Timer T3 Count/Gate Input P3.7 T2IN GPT1 Timer T2 Input for Count/Gate/Reload/Capture *These functions are only available on the C161K and the C161O.*
	11 12 13 14 15 16	I/O I/O O I/O O O I/O	P3.8 MRST SSC Master-Rec./Slave-Transmit I/O P3.9 MTSR SSC Master-Transmit/Slave-Rec. O/I P3.10 TxD0 ASC0 Clock/Data Output (Asyn./Syn.) P3.11 RxD0 ASC0 Data Input (Asyn.) or I/O (Syn.) P3.12 $\overline{BHE}$ Ext. Memory High Byte Enable Signal, $\overline{WRH}$ Ext. Memory High Byte Write Strobe P3.13 SCLK SSC Master Clock Outp./Slave Cl. Inp.
P4.0 – P4.5	17-20, 23, 24	I/O I/O	Port 4 is a 6-bit bidirectional I/O port. It is bit-wise programmable for input or output via direction bits. For a pin configured as input, the output driver is put into high-impedance state. In case of an external bus configuration, Port 4 can be used to output the segment address lines:
	17 ... 24	O ... O	P4.0 A16 Least Significant Segment Addr. Line ... ... P4.5 A21 Most Significant Segment Addr. Line
$\overline{RD}$	25	O	External Memory Read Strobe. $\overline{RD}$ is activated for every external instruction or data read access.

Pin Definitions and Functions (cont'd)

Symbol	Pin Number	Input Output	Function
$\overline{WR}$/ $\overline{WRL}$	26	O	External Memory Write Strobe. In $\overline{WR}$-mode this pin is activated for every external data write access. In $\overline{WRL}$-mode this pin is activated for low byte data write accesses on a 16-bit bus, and for every data write access on an 8-bit bus. See WRCFG in register SYSCON for mode selection.
ALE	27	O	Address Latch Enable Output. Can be used for latching the address into external memory or an address latch in the multiplexed bus modes.
$\overline{EA}$	28	I	External Access Enable pin. A low level at this pin during and after Reset forces the C161 to begin instruction execution out of external memory. A high level forces execution out of the internal ROM. The C161 must have this pin tied to '0'.
PORT0: P0L.0 – P0L.7, P0H.0 - P0H.7	29 – 36 39 – 46	I/O	PORT0 consists of the two 8-bit bidirectional I/O ports P0L and P0H. It is bit-wise programmable for input or output via direction bits. For a pin configured as input, the output driver is put into high-impedance state. In case of an external bus configuration, PORT0 serves as the address (A) and address/data (AD) bus in multiplexed bus modes and as the data (D) bus in demultiplexed bus modes.
			Demultiplexed bus modes: Data Path Width: 8-bit 16-bit P0L.0 – P0L.7: D0 - D7 D0 - D7 P0H.0 – P0H.7: I/O D8 - D15 *Demux bus is only available on the C161K and the C161O.*
			Multiplexed bus modes: Data Path Width: 8-bit 16-bit P0L.0 – P0L.7: AD0 - AD7 AD0 - AD7 P0H.0 – P0H.7: A8 - A15 AD8 - AD15
PORT1: P1L.0 – P1L.7, P1H.0 - P1H.7	47 - 54 55 - 62	I/O	PORT1 consists of the two 8-bit bidirectional I/O ports P1L and P1H. It is bit-wise programmable for input or output via direction bits. For a pin configured as input, the output driver is put into high-impedance state. The C161K and the C161O use PORT1 as the 16-bit address bus (A) in demultiplexed bus modes and also after switching from a demultiplexed bus mode to a multiplexed bus mode.
$\overline{RSTIN}$	65	I	Reset Input with Schmitt-Trigger characteristics. A low level at this pin for a specified duration while the oscillator is running resets the C161. An internal pullup resistor permits power-on reset using only a capacitor connected to V_{SS}.

Pin Definitions and Functions (cont'd)

Symbol	Pin Number	Input Output	Function
$\overline{\text{RSTOUT}}$	66	O	Internal Reset Indication Output. This pin is set to a low level when the part is executing either a hardware-, a software- or a watchdog timer reset. $\overline{\text{RSTOUT}}$ remains low until the EINIT (end of initialization) instruction is executed.
$\overline{\text{NMI}}$	67	I	Non-Maskable Interrupt Input. A high to low transition at this pin causes the CPU to vector to the NMI trap routine.
			When the PWRDN (power down) instruction is executed, the $\overline{\text{NMI}}$ pin must be low in order to force the C161 to go into power down mode. If $\overline{\text{NMI}}$ is high, when PWRDN is executed, the part will continue to run in normal mode. *Power Down is only available on the C161K and the C161O.*
			If not used, pin $\overline{\text{NMI}}$ should be pulled high externally.
P6.0 – P6.3	68 - 71	I/O I/O	Port 6 is a 4-bit bidirectional I/O port. It is bit-wise programmable for input or output via direction bits. For a pin configured as input, the output driver is put into high-impedance state. The Port 6 pins also serve for alternate functions:
	68 69 70 71	O O O O	P6.0 $\overline{\text{CS0}}$ Chip Select 0 Output (C161O, C161K) P6.1 $\overline{\text{CS1}}$ Chip Select 1 Output (C161O, C161K) P6.2 $\overline{\text{CS2}}$ Chip Select 2 Output (C161O) P6.3 $\overline{\text{CS3}}$ Chip Select 3 Output (C161O) *The C161V does not provide $\overline{\text{CS}}$ outputs.*
P2.9 – P2.15	72 - 78	I/O I/O	Port 2 is a 7-bit bidirectional I/O port. It is bit-wise programmable for input or output via direction bits. For a pin configured as input, the output driver is put into high-impedance state. The following Port 2 pins also serve for alternate functions:
	72 ... 75	I ... I	P2.9 EX1IN Fast External Interrupt 1 Input ... ... P2.12 EX4IN Fast External Interrupt 4 Input
	76 ... 78	I ... I	P2.13 EX5IN Fast External Interrupt 5 Input ... ... P2.15 EX7IN Fast External Interrupt 7 Input *These ext. interrupts are only available on the C161O.*
P5.14 – P5.15	79 80	I I	Port 5 is a 2-bit input-only port with Schmitt-Trigger characteristics.
			The pins of Port 5 also serve as timer inputs:
	79 80	I I	P5.14 T4EUD GPT1 Timer T4 Ext.Up/Down Ctrl.Input P5.15 T2EUD GPT1 Timer T2 Ext.Up/Down Ctrl.Input *These functions are only available on the C161K and the C161O.*

Pin Definitions and Functions (cont'd)

Symbol	Pin Number	Input Output	Function
V_{CC}	4, 22, 37, 64	-	Digital Supply Voltage: + 5 V during normal operation and idle mode. ≥ 2.5 V during power down mode
V_{SS}	1, 21, 38, 63	-	Digital Ground.

Device Cross-Reference

The table below describes the differences between the three derivatives described in this data sheet. This table provides an overview on the capabilities of each derivative for a quick comparison.

Feature	**C161V**	**C161K**	**C161O**
Internal RAM Size (IRAM)	1 KByte	1 KByte	2 KBytes
Chip Select Signals	---	2	4
Bus Modes	MUX	MUX / Demux	MUX / Demux
Power Saving Modes	---	yes	yes
Fast External Interrupts	4	4	7
General Purpose Timer Unit 1 (GPT1)	yes	yes	yes
Input / Output Functionality of GPT1	---	yes	yes
General Purpose Timer Unit 2 (GPT2) with Capture Input (CAPIN) Functionality	---	---	yes

Functional Description

The architecture of the C161 combines advantages of both RISC and CISC processors and of advanced peripheral subsystems in a very well-balanced way. The following block diagram gives an overview of the different on-chip components and of the advanced, high bandwidth internal bus structure of the C161.

Note: All time specifications refer to a CPU clock of 16 MHz
(see definition in the AC Characteristics section).

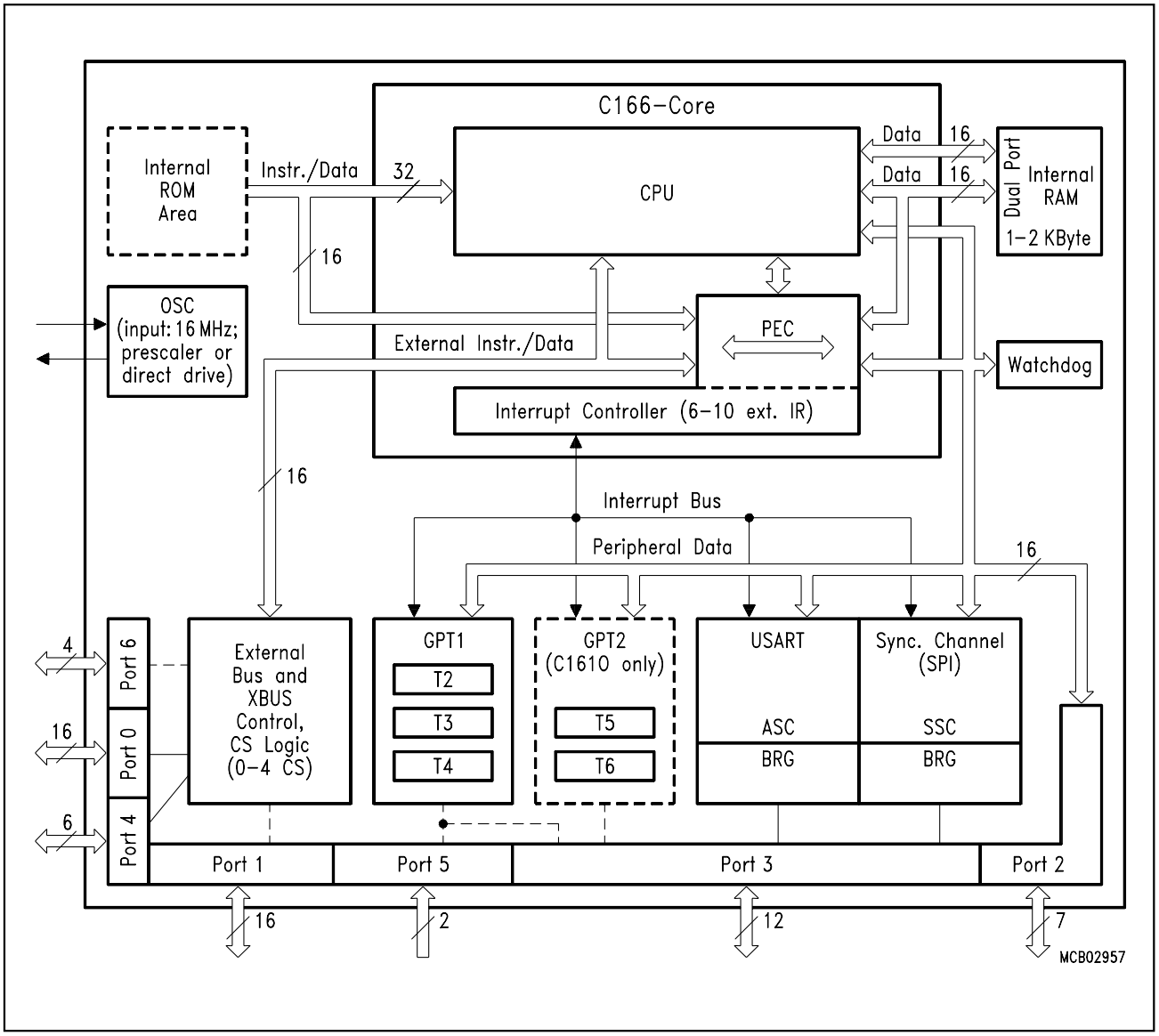

Figure 3
Block Diagram

Memory Organization

The memory space of the C161 is configured in a Von Neumann architecture which means that code memory, data memory, registers and I/O ports are organized within the same linear address space which includes 4 MBytes. The entire memory space can be accessed bytewise or wordwise. Particular portions of the on-chip memory have additionally been made directly bit addressable.

The C161 is prepared to incorporate on-chip mask-programmable ROM for code or constant data. Currently no ROM is integrated.

On-chip RAM (2 KBytes in the C161O, 1 KByte in the C161V and the C161K) is provided as a storage for user defined variables, for the system stack, general purpose register banks and even for code. A register bank can consist of up to 16 wordwide (R0 to R15) and/or bytewide (RL0, RH0, …, RL7, RH7) so-called General Purpose Registers (GPRs).

1024 bytes (2 * 512 bytes) of the address space are reserved for the Special Function Register areas (SFR space and ESFR space). SFRs are wordwide registers which are used for controlling and monitoring functions of the different on-chip units. Unused SFR addresses are reserved for future members of the C161 family.

In order to meet the needs of designs where more memory is required than is provided on chip, up to 4 MBytes of external RAM and/or ROM can be connected to the microcontroller.

External Bus Controller

All of the external memory accesses are performed by a particular on-chip External Bus Controller (EBC). It can be programmed either to Single Chip Mode when no external memory is required, or to one of four different external memory access modes, which are as follows:

– 16-/18-/20-/22-bit Addresses, 16-bit Data, Demultiplexed (not in the C161V)

– 16-/18-/20-/22-bit Addresses, 16-bit Data, Multiplexed

– 16-/18-/20-/22-bit Addresses, 8-bit Data, Multiplexed

– 16-/18-/20-/22-bit Addresses, 8-bit Data, Demultiplexed (not in the C161V)

In the demultiplexed bus modes, addresses are output on PORT1 and data is input/output on PORT0. In the multiplexed bus modes both addresses and data use PORT0 for input/output.

Note: The C161V only provides multiplexed bus modes.

Important timing characteristics of the external bus interface (Memory Cycle Time, Memory Tri-State Time, Length of ALE and Read Write Delay) have been made programmable to allow the user the adaption of a wide range of different types of memories. In addition, different address ranges may be accessed with different bus characteristics. External $\overline{CS}$ signals (0, 2, 4, depending on the device) can be generated in order to save external glue logic.

For applications which require less than 4 MBytes of external memory space, this address space can be restricted to 1 MByte, 256 KByte or to 64 KByte. In this case Port 4 outputs four, two or no address lines at all. It outputs all 6 address lines, if an address space of 4 MBytes is used.

Central Processing Unit (CPU)

The main core of the CPU consists of a 4-stage instruction pipeline, a 16-bit arithmetic and logic unit (ALU) and dedicated SFRs. Additional hardware has been spent for a separate multiply and divide unit, a bit-mask generator and a barrel shifter.

Based on these hardware provisions, most of the C161's instructions can be executed in just one machine cycle which requires 125 ns at 16-MHz CPU clock. For example, shift and rotate instructions are always processed during one machine cycle independent of the number of bits to be shifted. All multiple-cycle instructions have been optimized so that they can be executed very fast as well: branches in 2 cycles, a 16 × 16 bit multiplication in 5 cycles and a 32-/16 bit division in 10 cycles. Another pipeline optimization, the so-called 'Jump Cache', allows reducing the execution time of repeatedly performed jumps in a loop from 2 cycles to 1 cycle.

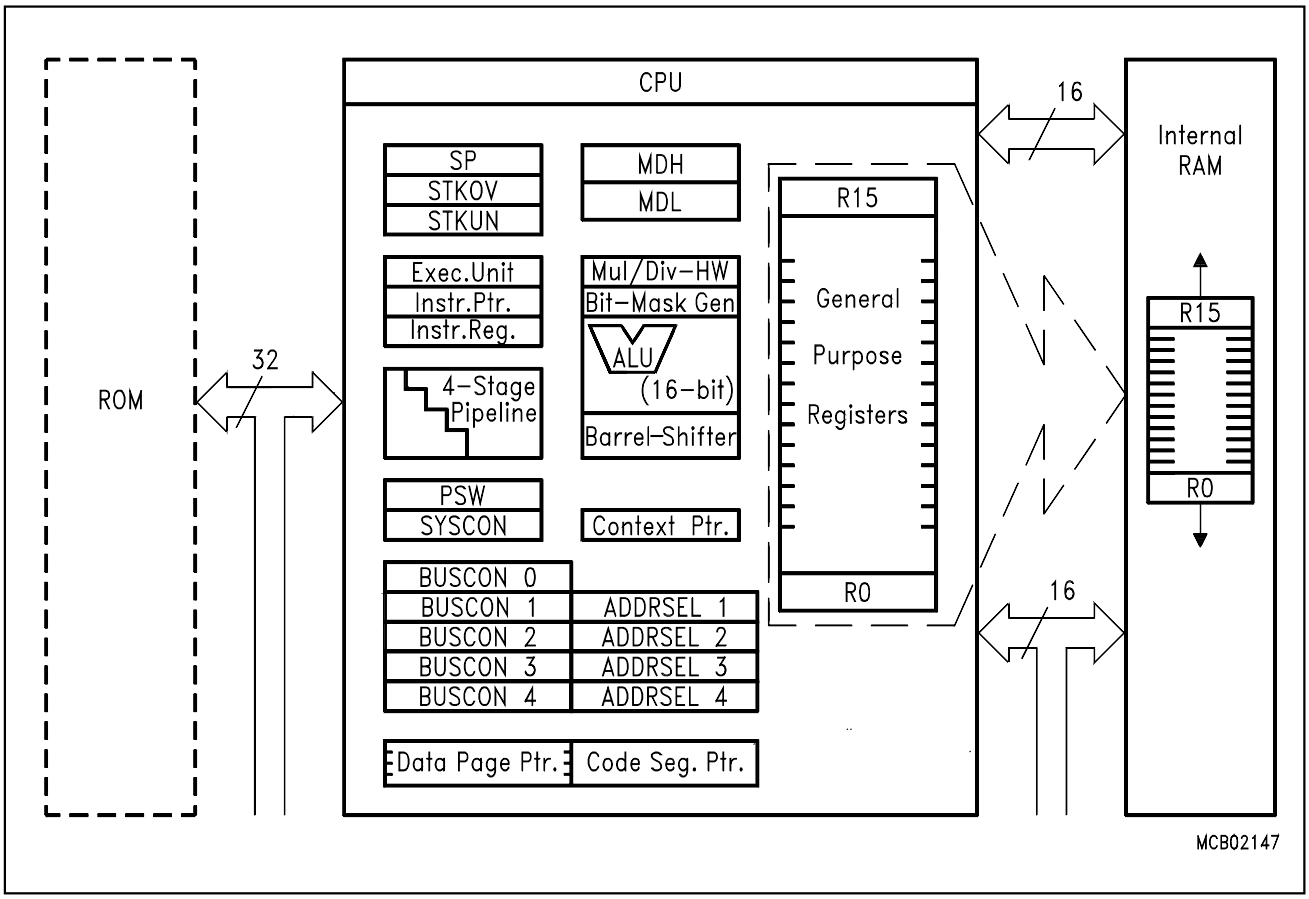

Figure 4
CPU Block Diagram

The CPU disposes of an actual register context consisting of up to 16 wordwide GPRs which are physically allocated within the on-chip RAM area. A Context Pointer (CP) register determines the base address of the active register bank to be accessed by the CPU at a time. The number of register banks is only restricted by the available internal RAM space. For easy parameter passing, a register bank may overlap others.

A system stack is provided as a storage for temporary data. The system stack is allocated in the on-chip RAM area, and it is accessed by the CPU via the stack pointer (SP) register. Two separate SFRs, STKOV and STKUN, are implicitly compared against the stack pointer value upon each stack access for the detection of a stack overflow or underflow.

The high performance offered by the hardware implementation of the CPU can efficiently be utilized by a programmer via the highly efficient C161 instruction set which includes the following instruction classes:

– Arithmetic Instructions
– Logical Instructions
– Boolean Bit Manipulation Instructions
– Compare and Loop Control Instructions
– Shift and Rotate Instructions
– Prioritize Instruction
– Data Movement Instructions
– System Stack Instructions
– Jump and Call Instructions
– Return Instructions
– System Control Instructions
– Miscellaneous Instructions

The basic instruction length is either 2 or 4 bytes. Possible operand types are bits, bytes and words. A variety of direct, indirect or immediate addressing modes are provided to specify the required operands.

Interrupt System

With an interrupt response time within a range from just 315 ns to 750 ns (in case of internal program execution), the C161 is capable of reacting very fast to the occurence of non-deterministic events.

The architecture of the C161 supports several mechanisms for fast and flexible response to service requests that can be generated from various sources internal or external to the microcontroller. Any of these interrupt requests can be programmed to being serviced by the Interrupt Controller or by the Peripheral Event Controller (PEC).

In contrast to a standard interrupt service where the current program execution is suspended and a branch to the interrupt vector table is performed, just one cycle is ‘stolen’ from the current CPU activity to perform a PEC service. A PEC service implies a single byte or word data transfer between any two memory locations with an additional increment of either the PEC source or the destination pointer. An individual PEC transfer counter is implicity decremented for each PEC service except when performing in the continuous transfer mode. When this counter reaches zero, a standard interrupt is performed to the corresponding source related vector location. PEC services are very well suited, for example, for supporting the transmission or reception of blocks of data. The C161 has 8 PEC channels each of which offers such fast interrupt-driven data transfer capabilities.

A separate control register which contains an interrupt request flag, an interrupt enable flag and an interrupt priority bitfield exists for each of the possible interrupt sources. Via its related register, each source can be programmed to one of sixteen interrupt priority levels. Once having been accepted by the CPU, an interrupt service can only be interrupted by a higher prioritized service request. For the standard interrupt processing, each of the possible interrupt sources has a dedicated vector location.

Fast external interrupt inputs are provided to service external interrupts with high precision requirements. These fast interrupt inputs feature programmable edge detection (rising edge, falling edge or both edges).

Software interrupts are supported by means of the ‘TRAP’ instruction in combination with an individual trap (interrupt) number.

The following table shows all of the possible C161 interrupt sources and the corresponding hardware-related interrupt flags, vectors, vector locations and trap (interrupt) numbers:

Source of Interrupt or PEC Service Request	Request Flag	Enable Flag	Interrupt Vector	Vector Location	Trap Number
External Interrupt 1	CC9IR	CC9IE	CC9INT	$00'0064_H$	19_H
External Interrupt 2	CC10IR	CC10IE	CC10INT	$00'0068_H$	$1A_H$
External Interrupt 3	CC11IR	CC11IE	CC11INT	$00'006C_H$	$1B_H$
External Interrupt 4	CC12IR	CC12IE	CC12INT	$00'0070_H$	$1C_H$
External Interrupt 5	CC13IR	CC13IE	CC13INT	$00'0074_H$	$1D_H$
External Interrupt 6	CC14IR	CC14IE	CC14INT	$00'0078_H$	$1E_H$
External Interrupt 7	CC15IR	CC15IE	CC15INT	$00'007C_H$	$1F_H$
GPT1 Timer 2	T2IR	T2IE	T2INT	$00'0088_H$	22_H
GPT1 Timer 3	T3IR	T3IE	T3INT	$00'008C_H$	23_H
GPT1 Timer 4	T4IR	T4IE	T4INT	$00'0090_H$	24_H
GPT2 Timer 5	T5IR	T5IE	T5INT	$00'0094_H$	25_H
GPT2 Timer 6	T6IR	T6IE	T6INT	$00'0098_H$	26_H
GPT2 CAPREL Register	CRIR	CRIE	CRINT	$00'009C_H$	27_H
ASC0 Transmit	S0TIR	S0TIE	S0TINT	$00'00A8_H$	$2A_H$
ASC0 Transmit Buffer	S0TBIR	S0TBIE	S0TBINT	$00'011C_H$	47_H
ASC0 Receive	S0RIR	S0RIE	S0RINT	$00'00AC_H$	$2B_H$
ASC0 Error	S0EIR	S0EIE	S0EINT	$00'00B0_H$	$2C_H$
SSC Transmit	SCTIR	SCTIE	SCTINT	$00'00B4_H$	$2D_H$
SSC Receive	SCRIR	SCRIE	SCRINT	$00'00B8_H$	$2E_H$
SSC Error	SCEIR	SCEIE	SCEINT	$00'00BC_H$	$2F_H$

Note: The shaded interrupt nodes are **only available in the C161O**, not in the C161V and the C161K.

The C161 also provides an excellent mechanism to identify and to process exceptions or error conditions that arise during run-time, so-called ‘Hardware Traps’. Hardware traps cause immediate non-maskable system reaction which is similar to a standard interrupt service (branching to a dedicated vector table location). The occurence of a hardware trap is additionally signified by an individual bit in the trap flag register (TFR). Except when another higher prioritized trap service is in progress, a hardware trap will interrupt any actual program execution. In turn, hardware trap services can normally not be interrupted by standard or PEC interrupts.

The following table shows all of the possible exceptions or error conditions that can arise during run-time:

Exception Condition	**Trap Flag**	**Trap Vector**	**Vector Location**	**Trap Number**	**Trap Priority**
Reset Functions:					
Hardware Reset		RESET	$00'0000_H$	00_H	III
Software Reset		RESET	$00'0000_H$	00_H	III
Watchdog Timer Overflow		RESET	$00'0000_H$	00_H	III
Class A Hardware Traps:					
Non-Maskable Interrupt	NMI	NMITRAP	$00'0008_H$	02_H	II
Stack Overflow	STKOF	STOTRAP	$00'0010_H$	04_H	II
Stack Underflow	STKUF	STUTRAP	$00'0018_H$	06_H	II
Class B Hardware Traps:					
Undefined Opcode	UNDOPC	BTRAP	$00'0028_H$	$0A_H$	I
Protected Instruction Fault	PRTFLT	BTRAP	$00'0028_H$	$0A_H$	I
Illegal Word Operand Access	ILLOPA	BTRAP	$00'0028_H$	$0A_H$	I
Illegal Instruction Access	ILLINA	BTRAP	$00'0028_H$	$0A_H$	I
Illegal External Bus Access	ILLBUS	BTRAP	$00'0028_H$	$0A_H$	I
Reserved			$[2C_H – 3C_H]$	$[0B_H – 0F_H]$	
Software Traps TRAP Instruction			Any $[00'0000_H – 00'01FC_H]$ in steps of 4_H	Any $[00_H – 7F_H]$	Current CPU Priority

General Purpose Timer (GPT) Units

The GPT units represent a very flexible multifunctional timer/counter structure which may be used for many different time related tasks such as event timing and counting, pulse width and duty cycle measurements, pulse generation, or pulse multiplication.
Two separate modules, GPT1 and GPT2, are available (GPT2 on C161O only). Each timer in each module may operate independently in a number of different modes, or may be concatenated with another timer of the same module.

Each of the three timers T2, T3, T4 of module **GPT1** can be configured individually for one of three basic modes of operation, which are Timer, Gated Timer, and Counter Mode. In Timer Mode, the input clock for a timer is derived from the CPU clock, divided by a programmable prescaler, while Counter Mode allows a timer to be clocked in reference to external events.
Pulse width or duty cycle measurement is supported in Gated Timer Mode, where the operation of a timer is controlled by the 'gate' level on an external input pin. For these purposes, each timer has one associated port pin (TxIN) which serves as gate or clock input. The maximum resolution of the timers in module GPT1 is 500 ns (@ 16-MHz CPU clock).

The count direction (up/down) for each timer is programmable by software or may additionally be altered dynamically by an external signal on a port pin (TxEUD) to facilitate e.g. position tracking.

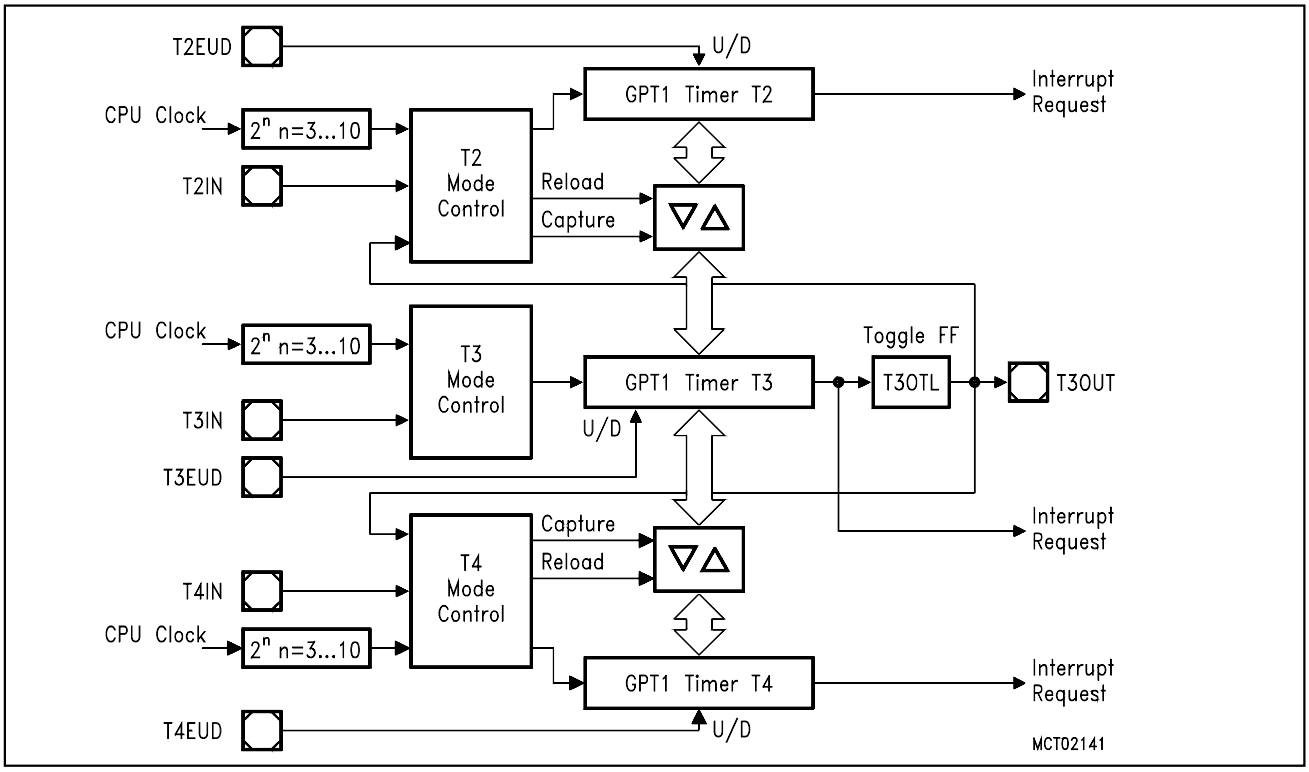

Figure 5
Block Diagram of GPT1

Timer T3 has an output toggle latch (T3OTL) which changes its state on each timer overflow/ underflow. The state of this latch may be output on a port pin (T3OUT) e.g. for time out monitoring of external hardware components, or may be used internally to clock timers T2 and T4 for measuring long time periods with high resolution.

In addition to their basic operating modes, timers T2 and T4 may be configured as reload or capture registers for timer T3. When used as capture or reload registers, timers T2 and T4 are stopped. The contents of timer T3 is captured into T2 or T4 in response to a signal at their associated input pins (TxIN). Timer T3 is reloaded with the contents of T2 or T4 triggered either by an external signal or by a selectable state transition of its toggle latch T3OTL. When both T2 and T4 are configured to alternately reload T3 on opposite state transitions of T3OTL with the low and high times of a PWM signal, this signal can be constantly generated without software intervention.

Note: The C161V has no external connection for GPT1, ie. the related functions are not available.

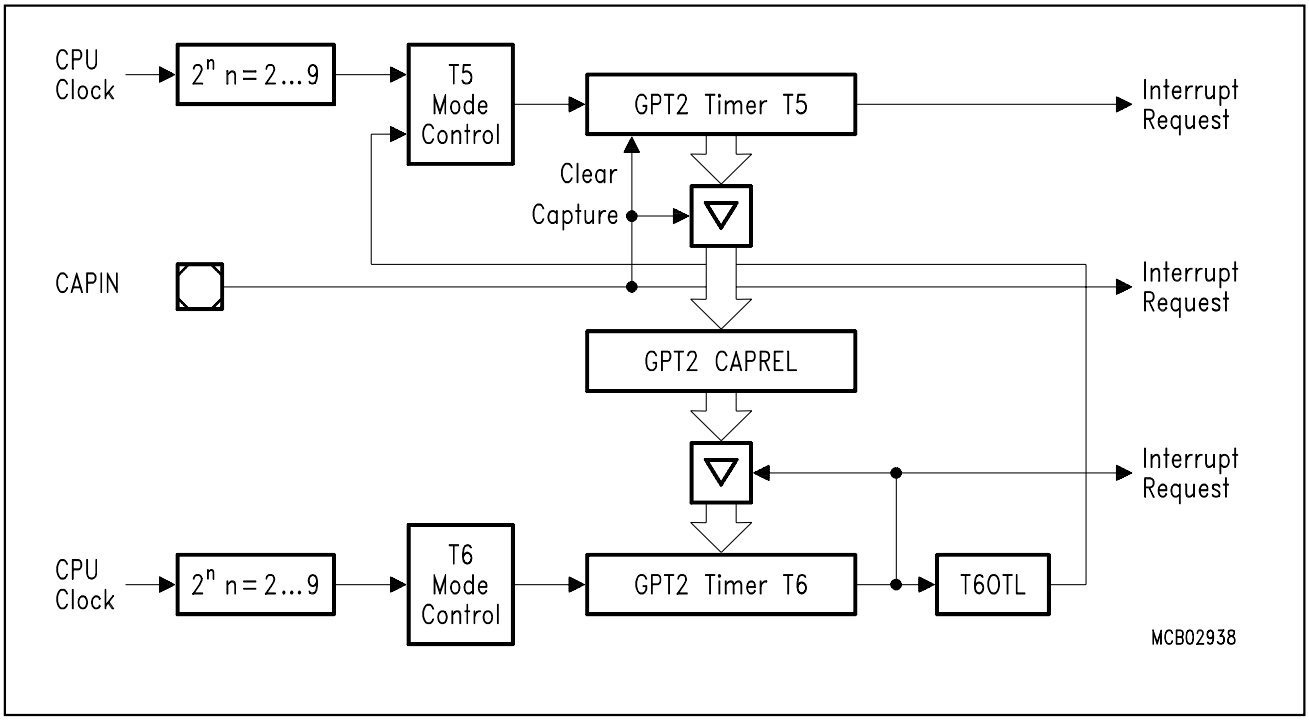

Figure 6
Block Diagram of GPT2

With its maximum resolution of 250 ns (@ 16 MHz), the **GPT2** module provides precise event control and time measurement. It includes two timers (T5, T6) and a capture/reload register (CAPREL). Both timers can be clocked with an input clock which is derived from the CPU clock via a programmable prescaler. The count direction (up/down) for each timer is programmable by software. Concatenation of the timers is supported via the output toggle latch (T6OTL) of timer T6, which changes its state on each timer overflow/underflow.

The state of this latch may be used to clock timer T5. The overflows/underflows of timer T6 can cause a reload from the CAPREL register. The CAPREL register may capture the contents of timer T5 based on an external signal transition on the corresponding port pin (CAPIN), and timer T5 may optionally be cleared after the capture procedure. This allows absolute time differences to be measured or pulse multiplication to be performed without software overhead.

Note: The GPT2 module is only available on the C161O.

Parallel Ports

The C161 provides up to 63 I/O lines which are organized into six input/output ports and one input port. All port lines are bit-addressable, and all input/output lines are individually (bit-wise) programmable as inputs or outputs via direction registers. The I/O ports are true bidirectional ports which are switched to high impedance state when configured as inputs. The output drivers of three I/O ports can be configured (pin by pin) for push/pull operation or open-drain operation via control registers. During the internal reset, all port pins are configured as inputs.

All port lines have programmable alternate input or output functions associated with them. PORT0 and PORT1 may be used as address and data lines when accessing external memory, while Port 4 outputs the additional segment address bits A21/19/17...A16 in systems where segmentation is enabled to access more than 64 KBytes of memory. Port 6 provides optional chip select signals. Port 3 includes alternate functions of timers, serial interfaces and the optional bus control signal $\overline{\text{BHE}}$. Port 5 is used for timer control signals. All port lines that are not used for these alternate functions may be used as general purpose I/O lines.

Watchdog Timer

The Watchdog Timer represents one of the fail-safe mechanisms which have been implemented to prevent the controller from malfunctioning for longer periods of time.

The Watchdog Timer is always enabled after a reset of the chip, and can only be disabled in the time interval until the EINIT (end of initialization) instruction has been executed. Thus, the chip's start-up procedure is always monitored. The software has to be designed to service the Watchdog Timer before it overflows. If, due to hardware or software related failures, the software fails to do so, the Watchdog Timer overflows and generates an internal hardware reset and pulls the $\overline{\text{RSTOUT}}$ pin low in order to allow external hardware components to be reset.

The Watchdog Timer is a 16-bit timer, clocked with the system clock divided either by 2 or by 128. The high byte of the Watchdog Timer register can be set to a prespecified reload value (stored in WDTREL) in order to allow further variation of the monitored time interval. Each time it is serviced by the application software, the high byte of the Watchdog Timer is reloaded. Thus, time intervals between 32 µs and 524 ms can be monitored (@ 16 MHz). The default Watchdog Timer interval after reset is 8.19 ms (@ 16 MHz).

Serial Channels

Serial communication with other microcontrollers, processors, terminals or external peripheral components is provided by two serial interfaces with different functionality, an Asynchronous/ Synchronous Serial Channel (**ASC0**) and a High-Speed Synchronous Serial Channel (**SSC**).

The ASC0 is upward compatible with the serial ports of the Siemens 8-bit microcontroller families and supports full-duplex asynchronous communication at up to 500 KBaud and half-duplex synchronous communication at up to 2 MBaud @ 16 MHz CPU clock.
A dedicated baud rate generator allows to set up all standard baud rates without oscillator tuning. For transmission, reception and error handling 4 separate interrupt vectors are provided. In asynchronous mode, 8- or 9-bit data frames are transmitted or received, preceded by a start bit and terminated by one or two stop bits. For multiprocessor communication, a mechanism to distinguish address from data bytes has been included (8-bit data plus wake up bit mode).
In synchronous mode, the ASC0 transmits or receives bytes (8 bits) synchronously to a shift clock which is generated by the ASC0. The ASC0 always shifts the LSB first. A loop back option is available for testing purposes.
A number of optional hardware error detection capabilities has been included to increase the reliability of data transfers. A parity bit can automatically be generated on transmission or be checked on reception. Framing error detection allows to recognize data frames with missing stop bits. An overrun error will be generated, if the last character received has not been read out of the receive buffer register at the time the reception of a new character is complete.

The SSC supports full-duplex synchronous communication at up to 4 Mbaud @ 16 MHz CPU clock. It may be configured so it interfaces with serially linked peripheral components. A dedicated baud rate generator allows to set up all standard baud rates without oscillator tuning. For transmission, reception and error handling 3 separate interrupt vectors are provided.
The SSC transmits or receives characters of 2...16 bits length synchronously to a shift clock which can be generated by the SSC (master mode) or by an external master (slave mode). The SSC can start shifting with the LSB or with the MSB and allows the selection of shifting and latching clock edges as well as the clock polarity.
A number of optional hardware error detection capabilities has been included to increase the reliability of data transfers. Transmit and receive error supervise the correct handling of the data buffer. Phase and baudrate error detect incorrect serial data.

Instruction Set Summary

The table below lists the instructions of the C161 in a condensed way.
The various addressing modes that can be used with a specific instruction, the operation of the instructions, parameters for conditional execution of instructions, and the opcodes for each instruction can be found in the **“C16x Family Instruction Set Manual”**.

This document also provides a detailled description of each instruction.

Instruction Set Summary

Mnemonic	Description	Bytes
ADD(B)	Add word (byte) operands	2 / 4
ADDC(B)	Add word (byte) operands with Carry	2 / 4
SUB(B)	Subtract word (byte) operands	2 / 4
SUBC(B)	Subtract word (byte) operands with Carry	2 / 4
MUL(U)	(Un)Signed multiply direct GPR by direct GPR (16-16-bit)	2
DIV(U)	(Un)Signed divide register MDL by direct GPR (16-/16-bit)	2
DIVL(U)	(Un)Signed long divide reg. MD by direct GPR (32-/16-bit)	2
CPL(B)	Complement direct word (byte) GPR	2
NEG(B)	Negate direct word (byte) GPR	2
AND(B)	Bitwise AND, (word/byte operands)	2 / 4
OR(B)	Bitwise OR, (word/byte operands)	2 / 4
XOR(B)	Bitwise XOR, (word/byte operands)	2 / 4
BCLR	Clear direct bit	2
BSET	Set direct bit	2
BMOV(N)	Move (negated) direct bit to direct bit	4
BAND, BOR, BXOR	AND/OR/XOR direct bit with direct bit	4
BCMP	Compare direct bit to direct bit	4
BFLDH/L	Bitwise modify masked high/low byte of bit-addressable direct word memory with immediate data	4
CMP(B)	Compare word (byte) operands	2 / 4
CMPD1/2	Compare word data to GPR and decrement GPR by 1/2	2 / 4
CMPI1/2	Compare word data to GPR and increment GPR by 1/2	2 / 4
PRIOR	Determine number of shift cycles to normalize direct word GPR and store result in direct word GPR	2
SHL / SHR	Shift left/right direct word GPR	2
ROL / ROR	Rotate left/right direct word GPR	2
ASHR	Arithmetic (sign bit) shift right direct word GPR	2

Instruction Set Summary (cont'd)

Mnemonic	Description	Bytes
MOV(B)	Move word (byte) data	2 / 4
MOVBS	Move byte operand to word operand with sign extension	2 / 4
MOVBZ	Move byte operand to word operand. with zero extension	2 / 4
JMPA, JMPI, JMPR	Jump absolute/indirect/relative if condition is met	4
JMPS	Jump absolute to a code segment	4
J(N)B	Jump relative if direct bit is (not) set	4
JBC	Jump relative and clear bit if direct bit is set	4
JNBS	Jump relative and set bit if direct bit is not set	4
CALLA, CALLI, CALLR	Call absolute/indirect/relative subroutine if condition is met	4
CALLS	Call absolute subroutine in any code segment	4
PCALL	Push direct word register onto system stack and call absolute subroutine	4
TRAP	Call interrupt service routine via immediate trap number	2
PUSH, POP	Push/pop direct word register onto/from system stack	2
SCXT	Push direct word register onto system stack und update register with word operand	4
RET	Return from intra-segment subroutine	2
RETS	Return from inter-segment subroutine	2
RETP	Return from intra-segment subroutine and pop direct word register from system stack	2
RETI	Return from interrupt service subroutine	2
SRST	Software Reset	4
IDLE	Enter Idle Mode	4
PWRDN	Enter Power Down Mode (supposes $\overline{\text{NMI}}$-pin being low)	4
SRVWDT	Service Watchdog Timer	4
DISWDT	Disable Watchdog Timer	4
EINIT	Signify End-of-Initialization on RSTOUT-pin	4
ATOMIC	Begin ATOMIC sequence	2
EXTR	Begin EXTended Register sequence	2
EXTP(R)	Begin EXTended Page (and Register) sequence	2 / 4
EXTS(R)	Begin EXTended Segment (and Register) sequence	2 / 4
NOP	Null operation	2

Special Function Registers Overview

The following table lists all SFRs which are implemented in the C161 in alphabetical order. **Bit-addressable** SFRs are marked with the letter "**b**" in column "Name". SFRs within the **Extended SFR-Space** (ESFRs) are marked with the letter "**E**" in column "Physical Address".

An SFR can be specified via its individual mnemonic name. Depending on the selected addressing mode, an SFR can be accessed via its physical address (using the Data Page Pointers), or via its short 8-bit address (without using the Data Page Pointers).

Special Function Registers Overview

Name	Physical Address	8-Bit Address	Description	Reset Value
ADDRSEL1	$FE18_H$	$0C_H$	Address Select Register 1	0000_H
ADDRSEL2	$FE1A_H$	$0D_H$	Address Select Register 2	0000_H
ADDRSEL3	$FE1C_H$	$0E_H$	Address Select Register 3	0000_H
ADDRSEL4	$FE1E_H$	$0F_H$	Address Select Register 4	0000_H
BUSCON0 b	$FF0C_H$	86_H	Bus Configuration Register 0	$0XX0_H$
BUSCON1 b	$FF14_H$	$8A_H$	Bus Configuration Register 1	0000_H
BUSCON2 b	$FF16_H$	$8B_H$	Bus Configuration Register 2	0000_H
BUSCON3 b	$FF18_H$	$8C_H$	Bus Configuration Register 3	0000_H
BUSCON4 b	$FF1A_H$	$8D_H$	Bus Configuration Register 4	0000_H
CAPREL	$FE4A_H$	25_H	GPT2 Capture/Reload Register	0000_H
CC9IC b	$FF8A_H$	$C5_H$	EX1IN Interrupt Control Register	0000_H
CC10IC b	$FF8C_H$	$C6_H$	EX2IN Interrupt Control Register	0000_H
CC11IC b	$FF8E_H$	$C7_H$	EX3IN Interrupt Control Register	0000_H
CC12IC b	$FF90_H$	$C8_H$	EX4IN Interrupt Control Register	0000_H
CC13IC b	$FF92_H$	$C9_H$	EX5IN Interrupt Control Register	0000_H
CC14IC b	$FF94_H$	CA_H	EX6IN Interrupt Control Register	0000_H
CC15IC b	$FF96_H$	CB_H	EX7IN Interrupt Control Register	0000_H
CP	$FE10_H$	08_H	CPU Context Pointer Register	$FC00_H$
CRIC b	$FF6A_H$	$B5_H$	GPT2 CAPREL Interrupt Control Register	0000_H
CSP	$FE08_H$	04_H	CPU Code Segment Pointer Register (read only)	0000_H
DP0L b	$F100_H$ **E**	80_H	P0L Direction Control Register	00_H
DP0H b	$F102_H$ **E**	81_H	P0H Direction Control Register	00_H

Special Function Registers Overview (cont'd)

Name		Physical Address		8-Bit Address	Description	Reset Value
DP1L	**b**	$F104_H$	**E**	82_H	P1L Direction Control Register	00_H
DP1H	**b**	$F106_H$	**E**	83_H	P1H Direction Control Register	00_H
DP2	**b**	$FFC2_H$		$E1_H$	Port 2 Direction Control Register	0000_H
DP3	**b**	$FFC6_H$		$E3_H$	Port 3 Direction Control Register	0000_H
DP4	**b**	$FFCA_H$		$E5_H$	Port 4 Direction Control Register	00_H
DP6	**b**	$FFCE_H$		$E7_H$	Port 6 Direction Control Register	00_H
DPP0		$FE00_H$		00_H	CPU Data Page Pointer 0 Register (10 bits)	0000_H
DPP1		$FE02_H$		01_H	CPU Data Page Pointer 1 Register (10 bits)	0001_H
DPP2		$FE04_H$		02_H	CPU Data Page Pointer 2 Register (10 bits)	0002_H
DPP3		$FE06_H$		03_H	CPU Data Page Pointer 3 Register (10 bits)	0003_H
EXICON	**b**	$F1C0_H$	**E**	$E0_H$	External Interrupt Control Register	0000_H
MDC	**b**	$FF0E_H$		87_H	CPU Multiply Divide Control Register	0000_H
MDH		$FE0C_H$		06_H	CPU Multiply Divide Register – High Word	0000_H
MDL		$FE0E_H$		07_H	CPU Multiply Divide Register – Low Word	0000_H
ODP2	**b**	$F1C2_H$	**E**	$E1_H$	Port 2 Open Drain Control Register	0000_H
ODP3	**b**	$F1C6_H$	**E**	$E3_H$	Port 3 Open Drain Control Register	0000_H
ODP6	**b**	$F1CE_H$	**E**	$E7_H$	Port 6 Open Drain Control Register	00_H
ONES		$FF1E_H$		$8F_H$	Constant Value 1's Register (read only)	$FFFF_H$
P0L	**b**	$FF00_H$		80_H	Port 0 Low Register (Lower half of PORT0)	00_H
P0H	**b**	$FF02_H$		81_H	Port 0 High Register (Upper half of PORT0)	00_H
P1L	**b**	$FF04_H$		82_H	Port 1 Low Register (Lower half of PORT1)	00_H
P1H	**b**	$FF06_H$		83_H	Port 1 High Register (Upper half of PORT1)	00_H
P2	**b**	$FFC0_H$		$E0_H$	Port 2 Register	0000_H
P3	**b**	$FFC4_H$		$E2_H$	Port 3 Register	0000_H
P4	**b**	$FFC8_H$		$E4_H$	Port 4 Register (8 bits)	00_H
P5	**b**	$FFA2_H$		$D1_H$	Port 5 Register (read only)	XXXX_H
P6	**b**	$FFCC_H$		$E6_H$	Port 6 Register (8 bits)	00_H
PECC0		$FEC0_H$		60_H	PEC Channel 0 Control Register	0000_H
PECC1		$FEC2_H$		61_H	PEC Channel 1 Control Register	0000_H

Special Function Registers Overview (cont'd)

Name		Physical Address		8-Bit Address	Description	Reset Value
PECC2		$FEC4_H$		62_H	PEC Channel 2 Control Register	0000_H
PECC3		$FEC6_H$		63_H	PEC Channel 3 Control Register	0000_H
PECC4		$FEC8_H$		64_H	PEC Channel 4 Control Register	0000_H
PECC5		$FECA_H$		65_H	PEC Channel 5 Control Register	0000_H
PECC6		$FECC_H$		66_H	PEC Channel 6 Control Register	0000_H
PECC7		$FECE_H$		67_H	PEC Channel 7 Control Register	0000_H
PSW	**b**	$FF10_H$		88_H	CPU Program Status Word	0000_H
RP0H	**b**	$F108_H$	**E**	84_H	System Startup Configuration Register (Rd. only)	XX_H
S0BG		$FEB4_H$		$5A_H$	Serial Channel 0 Baud Rate Generator Reload Register	0000_H
S0CON	**b**	$FFB0_H$		$D8_H$	Serial Channel 0 Control Register	0000_H
S0EIC	**b**	$FF70_H$		$B8_H$	Serial Channel 0 Error Interrupt Control Register	0000_H
S0RBUF		$FEB2_H$		59_H	Serial Channel 0 Receive Buffer Register (read only)	XX_H
S0RIC	**b**	$FF6E_H$		$B7_H$	Serial Channel 0 Receive Interrupt Control Register	0000_H
S0TBIC	**b**	$F19C_H$	**E**	CE_H	Serial Channel 0 Transmit Buffer Interrupt Control Register	0000_H
S0TBUF		$FEB0_H$		58_H	Serial Channel 0 Transmit Buffer Register (write only)	00_H
S0TIC	**b**	$FF6C_H$		$B6_H$	Serial Channel 0 Transmit Interrupt Control Register	0000_H
SP		$FE12_H$		09_H	CPU System Stack Pointer Register	$FC00_H$
SSCBR		$F0B4_H$	**E**	$5A_H$	SSC Baudrate Register	0000_H
SSCCON	**b**	$FFB2_H$		$D9_H$	SSC Control Register	0000_H
SSCEIC	**b**	$FF76_H$		BB_H	SSC Error Interrupt Control Register	0000_H
SSCRB		$F0B2_H$	**E**	59_H	SSC Receive Buffer (read only)	XXXX_H
SSCRIC	**b**	$FF74_H$		BA_H	SSC Receive Interrupt Control Register	0000_H
SSCTB		$F0B0_H$	**E**	58_H	SSC Transmit Buffer (write only)	0000_H
SSCTIC	**b**	$FF72_H$		$B9_H$	SSC Transmit Interrupt Control Register	0000_H
STKOV		$FE14_H$		$0A_H$	CPU Stack Overflow Pointer Register	$FA00_H$

Special Function Registers Overview (cont'd)

Name		Physical Address	8-Bit Address	Description	Reset Value
STKUN		$FE16_H$	$0B_H$	CPU Stack Underflow Pointer Register	$FC00_H$
SYSCON	**b**	$FF12_H$	89_H	CPU System Configuration Register	$0xx0_H$*)
T2		$FE40_H$	20_H	GPT1 Timer 2 Register	0000_H
T2CON	**b**	$FF40_H$	$A0_H$	GPT1 Timer 2 Control Register	0000_H
T2IC	**b**	$FF60_H$	$B0_H$	GPT1 Timer 2 Interrupt Control Register	0000_H
T3		$FE42_H$	21_H	GPT1 Timer 3 Register	0000_H
T3CON	**b**	$FF42_H$	$A1_H$	GPT1 Timer 3 Control Register	0000_H
T3IC	**b**	$FF62_H$	$B1_H$	GPT1 Timer 3 Interrupt Control Register	0000_H
T4		$FE44_H$	22_H	GPT1 Timer 4 Register	0000_H
T4CON	**b**	$FF44_H$	$A2_H$	GPT1 Timer 4 Control Register	0000_H
T4IC	**b**	$FF64_H$	$B2_H$	GPT1 Timer 4 Interrupt Control Register	0000_H
T5		$FE46_H$	23_H	GPT2 Timer 5 Register	0000_H
T5CON	**b**	$FF46_H$	$A3_H$	GPT2 Timer 5 Control Register	0000_H
T5IC	**b**	$FF66_H$	$B3_H$	GPT2 Timer 5 Interrupt Control Register	0000_H
T6		$FE48_H$	24_H	GPT2 Timer 6 Register	0000_H
T6CON	**b**	$FF48_H$	$A4_H$	GPT2 Timer 6 Control Register	0000_H
T6IC	**b**	$FF68_H$	$B4_H$	GPT2 Timer 6 Interrupt Control Register	0000_H
TFR	**b**	$FFAC_H$	$D6_H$	Trap Flag Register	0000_H
WDT		$FEAE_H$	57_H	Watchdog Timer Register (read only)	0000_H
WDTCON		$FFAE_H$	$D7_H$	Watchdog Timer Control Register	0000_H
ZEROS	**b**	$FF1C_H$	$8E_H$	Constant Value 0's Register (read only)	0000_H

*) The system configuration is selected during reset.

Note: The shaded registers are **only available in the C161O**, not in the C161V and the C161K.

Absolute Maximum Ratings

Ambient temperature under bias (T_A):
SAB-C161V-L16M, SAB-C161K-L16M, SAB-C161O-L16M ..... 0 to +70 °C
Storage temperature (T_{ST}) ..... – 65 to +150 °C
Voltage on V_{CC} pins with respect to ground (V_{SS}) ..... –0.5 to +6.5 V
Voltage on any pin with respect to ground (V_{SS}) ..... –0.5 to V_{CC} +0.5 V
Input current on any pin during overload condition ..... –10 to +10 mA
Absolute sum of all input currents during overload condition ..... |100 mA|
Power dissipation ..... 1.5 W

Note: Stresses above those listed under “Absolute Maximum Ratings” may cause permanent damage to the device. This is a stress rating only and functional operation of the device at these or any other conditions above those indicated in the operational sections of this specification is not implied. Exposure to absolute maximum rating conditions for extended periods may affect device reliability. During overload conditions (V_{IN}>V_{CC} or V_{IN}<V_{SS}) the voltage on pins with respect to ground (V_{SS}) must not exceed the values defined by the Absolute Maximum Ratings.

Parameter Interpretation

The parameters listed in the following partly represent the characteristics of the C161 and partly its demands on the system. To aid in interpreting the parameters right, when evaluating them for a design, they are marked in column “Symbol”:

CC (**C**ontroller **C**haracteristics):
The logic of the C161 will provide signals with the respective timing characteristics.

SR (**S**ystem **R**equirement):
The external system must provide signals with the respective timing characteristics to the C161.

DC Characteristics

V_{CC} = 5 V ± 10 %; V_{SS} = 0 V; f_{CPU} = 16 MHz; Reset active
T_A = 0 to +70 °C for SAB-C161V-L16M, SAB-C161K-L16M, SAB-C161O-L16M

Parameter	Symbol		Limit Values		Unit	Test Condition
			min.	max.		
Input low voltage	V_{IL}	SR	– 0.5	0.2 V_{CC} – 0.1	V	–
Input high voltage (all except $\overline{RSTIN}$ and XTAL1)	V_{IH}	SR	0.2 V_{CC} + 0.9	V_{CC} + 0.5	V	–
Input high voltage $\overline{RSTIN}$	V_{IH1}	SR	0.6 V_{CC}	V_{CC} + 0.5	V	–
Input high voltage XTAL1	V_{IH2}	SR	0.7 V_{CC}	V_{CC} + 0.5	V	–

Parameter	Symbol	Limit Values		Unit	Test Condition
		min.	max.		
Output low voltage (PORT0, PORT1, Port 4, ALE, $\overline{RD}$, $\overline{WR}$, $\overline{BHE}$, CLKOUT, $\overline{RSTOUT}$)	V_{OL} CC	–	0.45	V	I_{OL} = 2.4 mA
Output low voltage (all other outputs)	V_{OL1} CC	–	0.45	V	I_{OL1} = 1.6 mA
Output high voltage (PORT0, PORT1, Port 4, ALE, $\overline{RD}$, $\overline{WR}$, $\overline{BHE}$, CLKOUT, $\overline{RSTOUT}$)	V_{OH} CC	0.9 V_{CC} 2.4	–	V	I_{OH} = – 500 µA I_{OH} = – 2.4 mA
Output high voltage [1] (all other outputs)	V_{OH1} CC	0.9 V_{CC} 2.4	–	V V	I_{OH} = – 250 µA I_{OH} = – 1.6 mA
Input leakage current (Port 5)	I_{OZ1} CC	–	±200	nA	0 V < V_{IN} < V_{CC}
Input leakage current (all other)	I_{OZ2} CC	–	±500	nA	0 V < V_{IN} < V_{CC}
$\overline{RSTIN}$ pullup resistor	R_{RST} CC	50	150	kΩ	–
Read/Write inactive current [4]	I_{RWH} [2]	–	-40	µA	V_{OUT} = 2.4 V
Read/Write active current [4]	I_{RWL} [3]	-500	–	µA	V_{OUT} = V_{OLmax}
ALE inactive current [4]	I_{ALEL} [2]	–	40	µA	V_{OUT} = V_{OLmax}
ALE active current [4]	I_{ALEH} [3]	500	–	µA	V_{OUT} = 2.4 V
Port 6 inactive current [4]	I_{P6H} [2]	–	-40	µA	V_{OUT} = 2.4 V
Port 6 active current [4]	I_{P6L} [3]	-500	–	µA	V_{OUT} = V_{OL1max}
PORT0 configuration current [4]	I_{P0H} [2]	–	-10	µA	V_{IN} = V_{IHmin}
	I_{P0L} [3]	-100	–	µA	V_{IN} = V_{ILmax}
XTAL1 input current	I_{IL} CC	–	±20	µA	0 V < V_{IN} < V_{CC}
Pin capacitance [5] (digital inputs/outputs)	C_{IO} CC	–	10	pF	f = 1 MHz T_A = 25 °C
Power supply current	I_{CC}	–	10 + 4 * f_{CPU}	mA	$\overline{RSTIN}$ = V_{IL2} f_{CPU} in [MHz] [6]
Idle mode supply current	I_{ID}	–	2 + 1.2 * f_{CPU}	mA	$\overline{RSTIN}$ = V_{IH1} f_{CPU} in [MHz] [6]
Power-down mode supply current	I_{PD}	–	50	µA	V_{CC} = 5.5 V [7]

Notes

1) This specification is not valid for outputs which are switched to open drain mode. In this case the respective output will float and the voltage results from the external circuitry.

2) The maximum current may be drawn while the respective signal line remains inactive.

3) The minimum current must be drawn in order to drive the respective signal line active.

4) This specification is only valid during Reset, or during Hold- or Adapt-mode. Port 6 pins are only affected, if they are used for $\overline{CS}$ output and the open drain function is not enabled.

5) Not 100% tested, guaranteed by design characterization.

6) The supply current is a function of the operating frequency. This dependency is illustrated in the figure below. These parameters are tested at V_{CCmax} and 16 MHz CPU clock with all outputs disconnected and all inputs at V_{IL} or V_{IH}.

7) This parameter is tested including leakage currents. All inputs (including pins configured as inputs) at 0 V to 0.1 V or at V_{CC} – 0.1 V to V_{CC}, V_{REF} = 0 V, all outputs (including pins configured as outputs) disconnected.

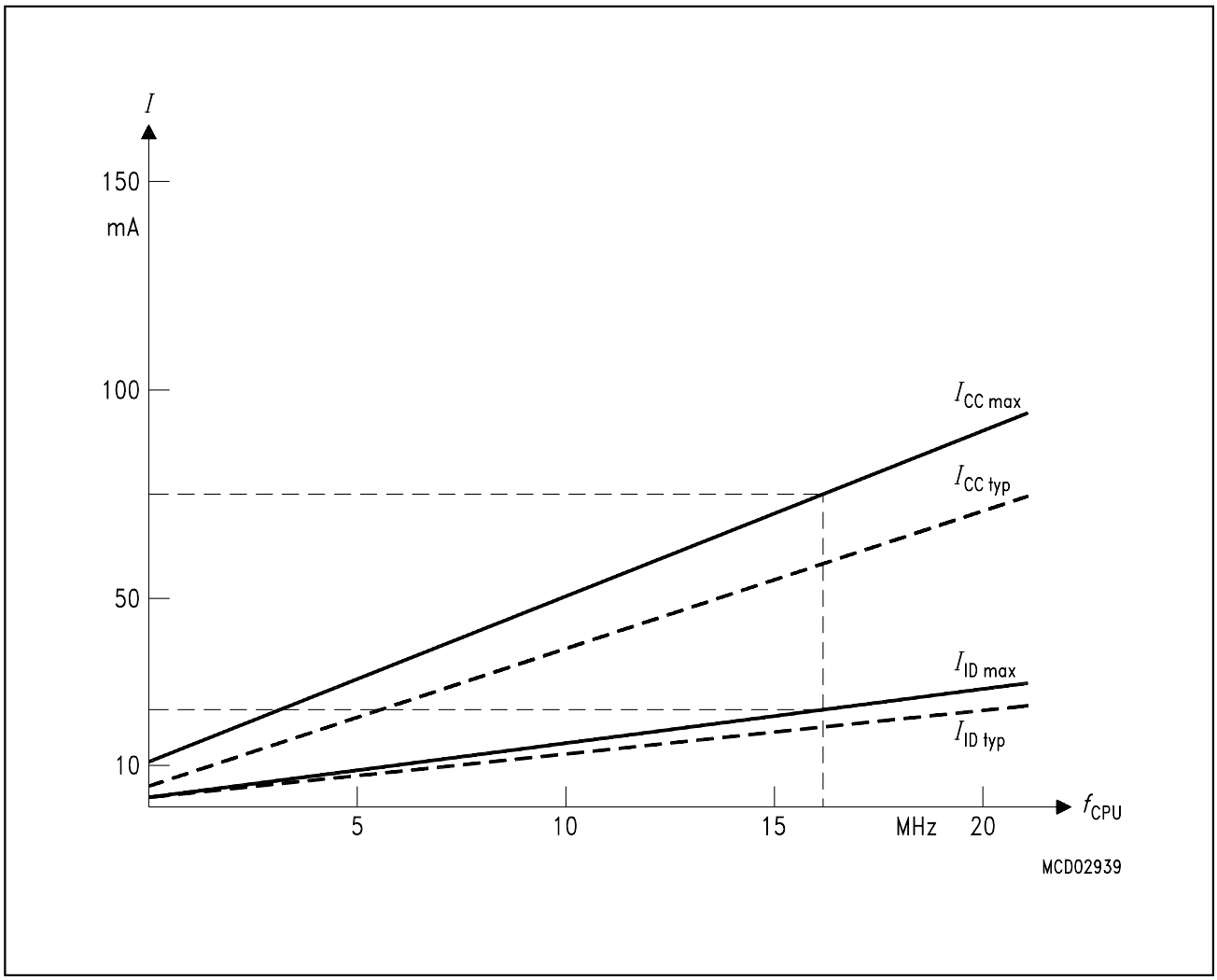

Figure 7
Supply/Idle Current as a Function of Operating Frequency

Testing Waveforms

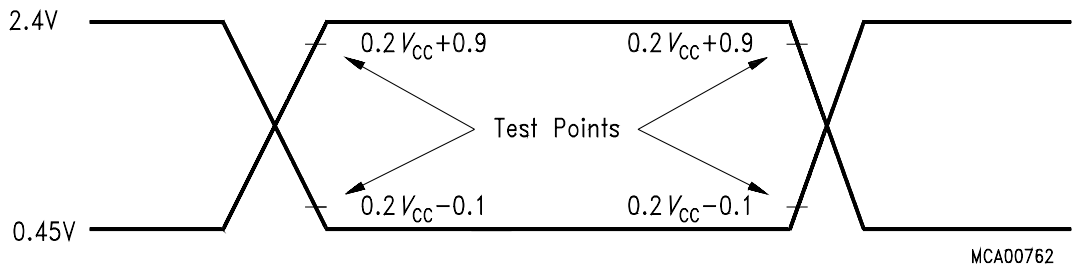

AC inputs during testing are driven at 2.4 V for a logic ‘1’ and 0.4 V for a logic ‘0’. Timing measurements are made at V_{IH} min for a logic ‘1’ and V_{IL} max for a logic ‘0’.

Figure 8
Input Output Waveforms

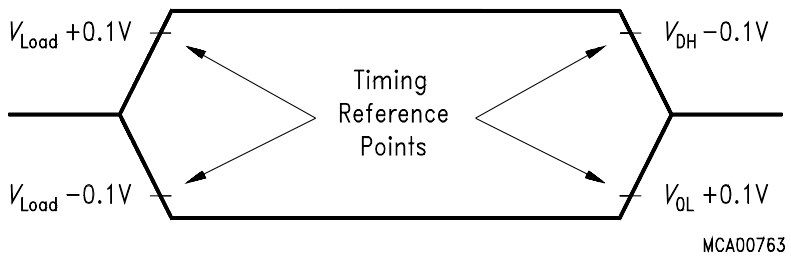

For timing purposes a port pin is no longer floating when a 100 mV change from load voltage occurs, but begins to float when a 100 mV change from the loaded V_{OH}/V_{OL} level occurs (I_{OH}/I_{OL} = 20 mA).

Figure 9
Float Waveforms

AC Characteristics
External Clock Drive XTAL1
V_{CC} = 5 V ± 10 %; V_{SS} = 0 V
T_A = 0 to +70 °C for SAB-C161V-L16M, SAB-C161K-L16M, SAB-C161O-L16M

Parameter	Symbol		Max. CPU Clock = 16 MHz		Variable CPU Clock 1/2TCL = 1 to 16 MHz		Unit
			min.	max.	min.	max.	
Oscillator period	TCL	SR	31	31	31	500	ns
High time	t_1	SR	8	–	8	–	ns
Low time	t_2	SR	8	–	8	–	ns
Rise time	t_3	SR	–	6	–	6	ns
Fall time	t_4	SR	–	6	–	6	ns

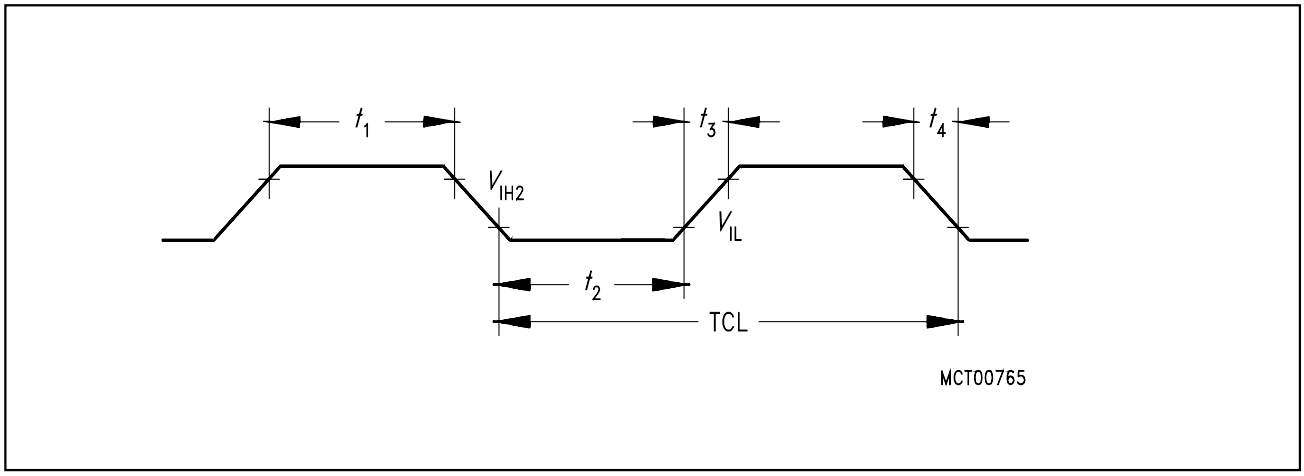

Figure 10
External Clock Drive XTAL1

Memory Cycle Variables

The timing tables below use three variables which are derived from the BUSCONx registers and represent the special characteristics of the programmed memory cycle. The following table describes, how these variables are to be computed.

Description	Symbol	Values
ALE Extension	t_A	TCL * <ALECTL>
Memory Cycle Time Waitstates	t_C	2TCL * (15 - <MCTC>)
Memory Tristate Time	t_F	2TCL * (1 - <MTTC>)

AC Characteristics (cont'd)

Multiplexed Bus

V_{CC} = 5 V ± 10 %; V_{SS} = 0 V

T_A = 0 to +70 °C for SAB-C161V-L16M, SAB-C161K-L16M, SAB-C161O-L16M

C_L (for PORT0, PORT1, Port 4, ALE, $\overline{RD}$, $\overline{WR}$, $\overline{BHE}$, CLKOUT) = 100 pF

C_L (for Port 6, $\overline{CS}$) = 100 pF

ALE cycle time = 6 TCL + 2t_A + t_C + t_F (186 ns at 16-MHz CPU clock without waitstates)

Parameter	Symbol		Max. CPU Clock = 16 MHz		Variable CPU Clock 1/2TCL = 1 to 16 MHz		Unit
			min.	max.	min.	max.	
ALE high time	t_5	CC	21 + t_A	–	TCL - 10 + t_A	–	ns
Address setup to ALE	t_6	CC	16 + t_A	–	TCL - 15 + t_A	–	ns
Address hold after ALE	t_7	CC	21 + t_A	–	TCL - 10 + t_A	–	ns
ALE falling edge to $\overline{RD}$, $\overline{WR}$ (with RW-delay)	t_8	CC	21 + t_A	–	TCL - 10 + t_A	–	ns
ALE falling edge to $\overline{RD}$, $\overline{WR}$ (no RW-delay)	t_9	CC	-10 + t_A	–	-10 + t_A	–	ns
Address float after $\overline{RD}$, $\overline{WR}$ (with RW-delay)	t_{10}	CC	–	5	–	5	ns
Address float after $\overline{RD}$, $\overline{WR}$ (no RW-delay)	t_{11}	CC	–	36	–	TCL + 5	ns
$\overline{RD}$, $\overline{WR}$ low time (with RW-delay)	t_{12}	CC	53 + t_C	–	2TCL - 10 + t_C	–	ns
$\overline{RD}$, $\overline{WR}$ low time (no RW-delay)	t_{13}	CC	84 + t_C	–	3TCL - 10 + t_C	–	ns
$\overline{RD}$ to valid data in (with RW-delay)	t_{14}	SR	–	43 + t_C	–	2TCL - 20 + t_C	ns
$\overline{RD}$ to valid data in (no RW-delay)	t_{15}	SR	–	74 + t_C	–	3TCL - 20 + t_C	ns
ALE low to valid data in	t_{16}	SR	–	74 + t_A + t_C	–	3TCL - 20 + t_A + t_C	ns
Address to valid data in	t_{17}	SR	–	95 + 2t_A + t_C	–	4TCL - 30 + 2t_A + t_C	ns
Data hold after $\overline{RD}$ rising edge	t_{18}	SR	0	–	0	–	ns
Data float after $\overline{RD}$	t_{19}	SR	–	48 + t_F	–	2TCL - 15 + t_F	ns
Data valid to $\overline{WR}$	t_{22}	SR	48 + t_C	–	2TCL - 15 + t_C	–	ns

Parameter	Symbol		Max. CPU Clock = 16 MHz		Variable CPU Clock 1/2TCL = 1 to 16 MHz		Unit
			min.	max.	min.	max.	
Data hold after $\overline{WR}$	t_{23}	CC	48 + t_F	–	2TCL - 15 + t_F	–	ns
ALE rising edge after $\overline{RD}$, $\overline{WR}$	t_{25}	CC	48 + t_F	–	2TCL - 15 + t_F	–	ns
Address hold after $\overline{RD}$, $\overline{WR}$	t_{27}	CC	48 + t_F	–	2TCL - 15 + t_F	–	ns
ALE falling edge to $\overline{CS}$	t_{38}	CC	-5 - t_A	10 - t_A	-5 - t_A	10 - t_A	ns
$\overline{CS}$ low to Valid Data In	t_{39}	SR	–	74 + t_C + 2t_A	–	3TCL - 20 + t_C + 2t_A	ns
$\overline{CS}$ hold after $\overline{RD}$, $\overline{WR}$	t_{40}	CC	79 + t_F	–	3TCL - 15 + t_F	–	ns
ALE fall. edge to $\overline{RdCS}$, $\overline{WrCS}$ (with RW delay)	t_{42}	CC	26 + t_A	–	TCL - 5 + t_A	–	ns
ALE fall. edge to $\overline{RdCS}$, $\overline{WrCS}$ (no RW delay)	t_{43}	CC	-5 + t_A	–	-5 + t_A	–	ns
Address float after $\overline{RdCS}$, $\overline{WrCS}$ (with RW delay)	t_{44}	CC	–	0	–	0	ns
Address float after $\overline{RdCS}$, $\overline{WrCS}$ (no RW delay)	t_{45}	CC	–	31	–	TCL	ns
$\overline{RdCS}$ to Valid Data In (with RW delay)	t_{46}	SR	–	38 + t_C	–	2TCL - 25 + t_C	ns
$\overline{RdCS}$ to Valid Data In (no RW delay)	t_{47}	SR	–	69 + t_C	–	3TCL - 25 + t_C	ns
$\overline{RdCS}$, $\overline{WrCS}$ Low Time (with RW delay)	t_{48}	CC	53 + t_C	–	2TCL - 10 + t_C	–	ns
$\overline{RdCS}$, $\overline{WrCS}$ Low Time (no RW delay)	t_{49}	CC	84 + t_C	–	3TCL - 10 + t_C	–	ns
Data valid to $\overline{WrCS}$	t_{50}	CC	48 + t_C	–	2TCL - 15 + t_C	–	ns
Data hold after $\overline{RdCS}$	t_{51}	SR	0	–	0	–	ns
Data float after $\overline{RdCS}$	t_{52}	SR	–	43 + t_F	–	2TCL - 20 + t_F	ns
Address hold after $\overline{RdCS}$, $\overline{WrCS}$	t_{54}	CC	43 + t_F	–	2TCL - 20 + t_F	–	ns
Data hold after $\overline{WrCS}$	t_{56}	CC	43 + t_F	–	2TCL - 20 + t_F	–	ns

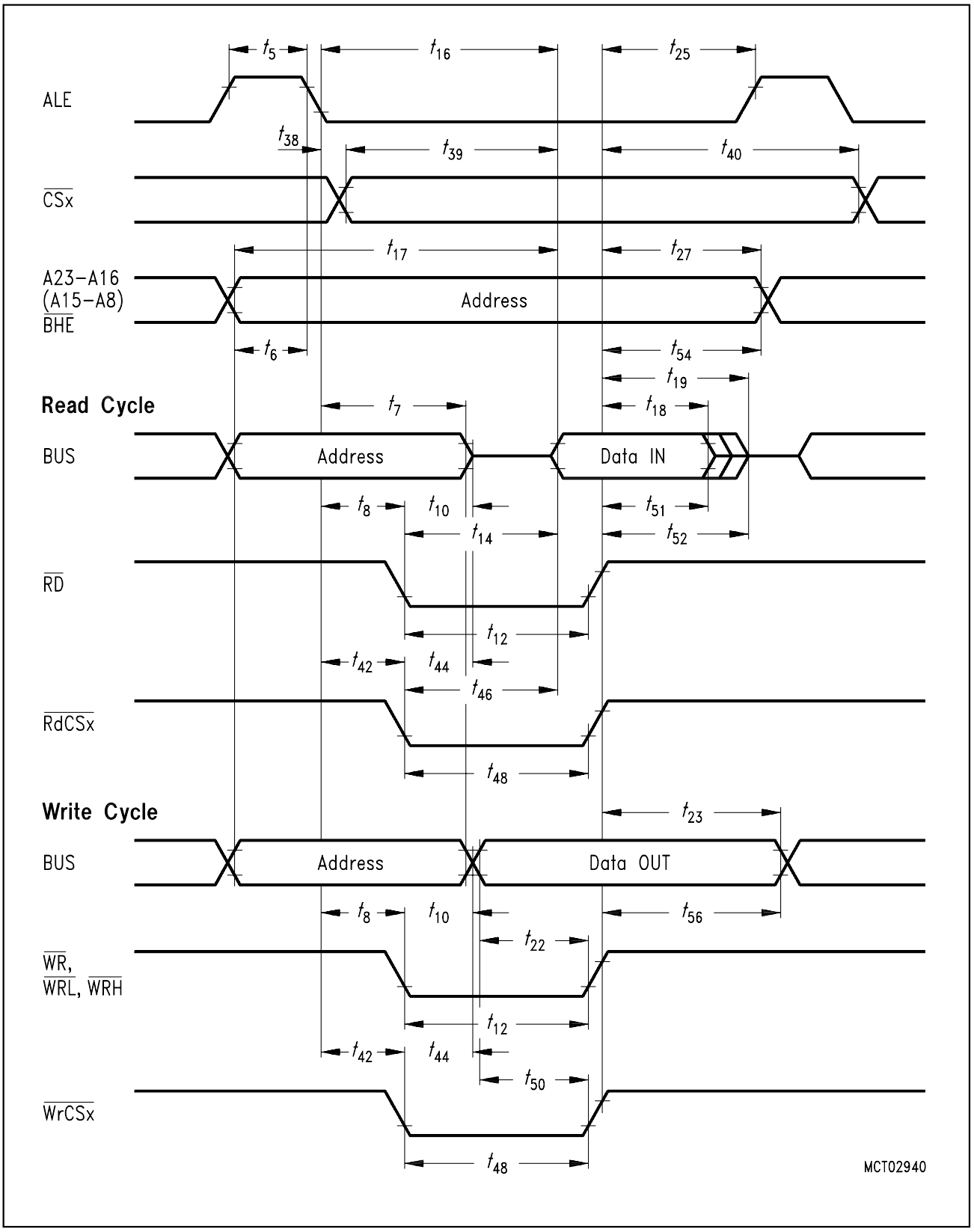

Figure 11-1
External Memory Cycle: Multiplexed Bus, With Read/Write Delay, Normal ALE

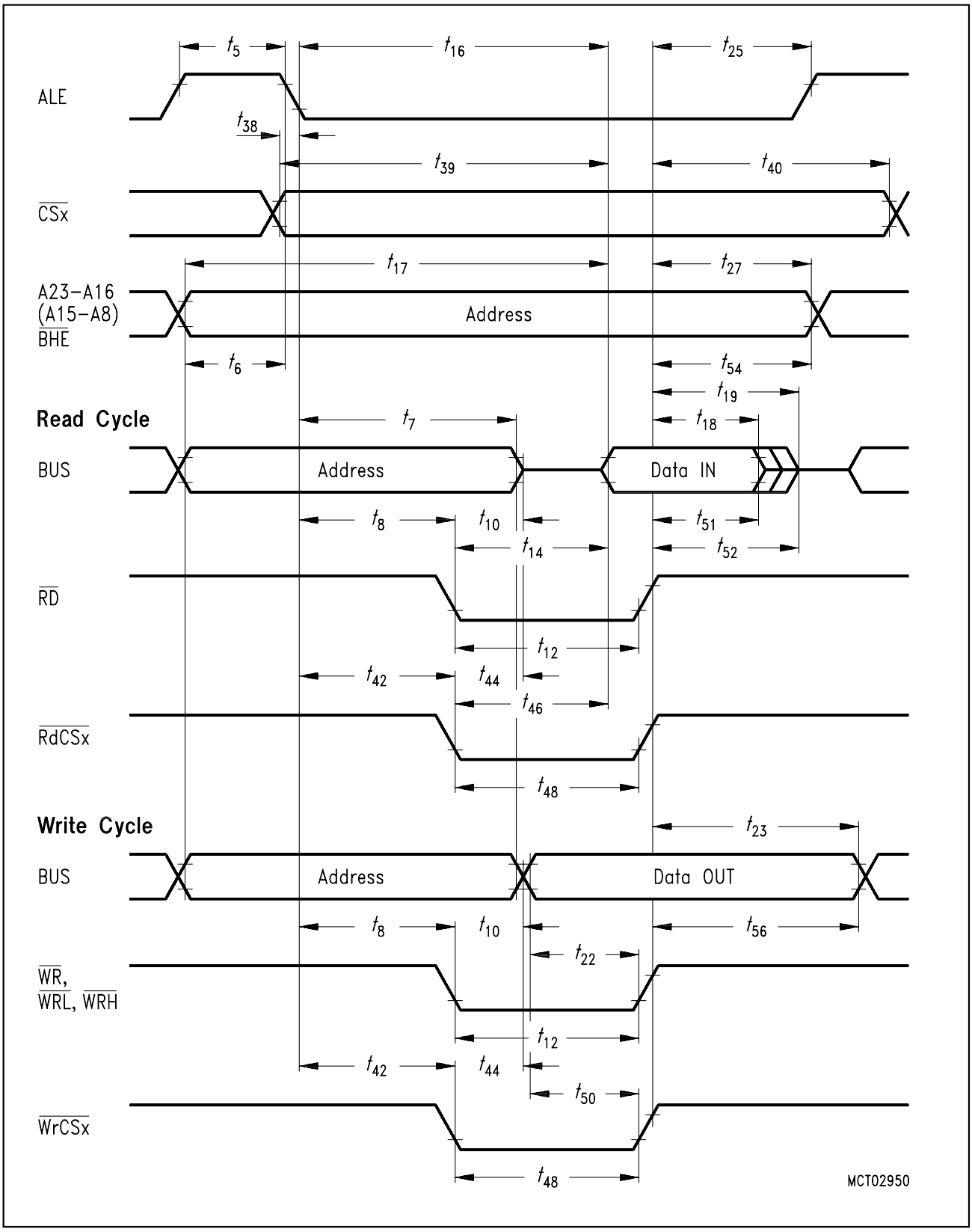

Figure 11-2
External Memory Cycle: Multiplexed Bus, With Read/Write Delay, Extended ALE

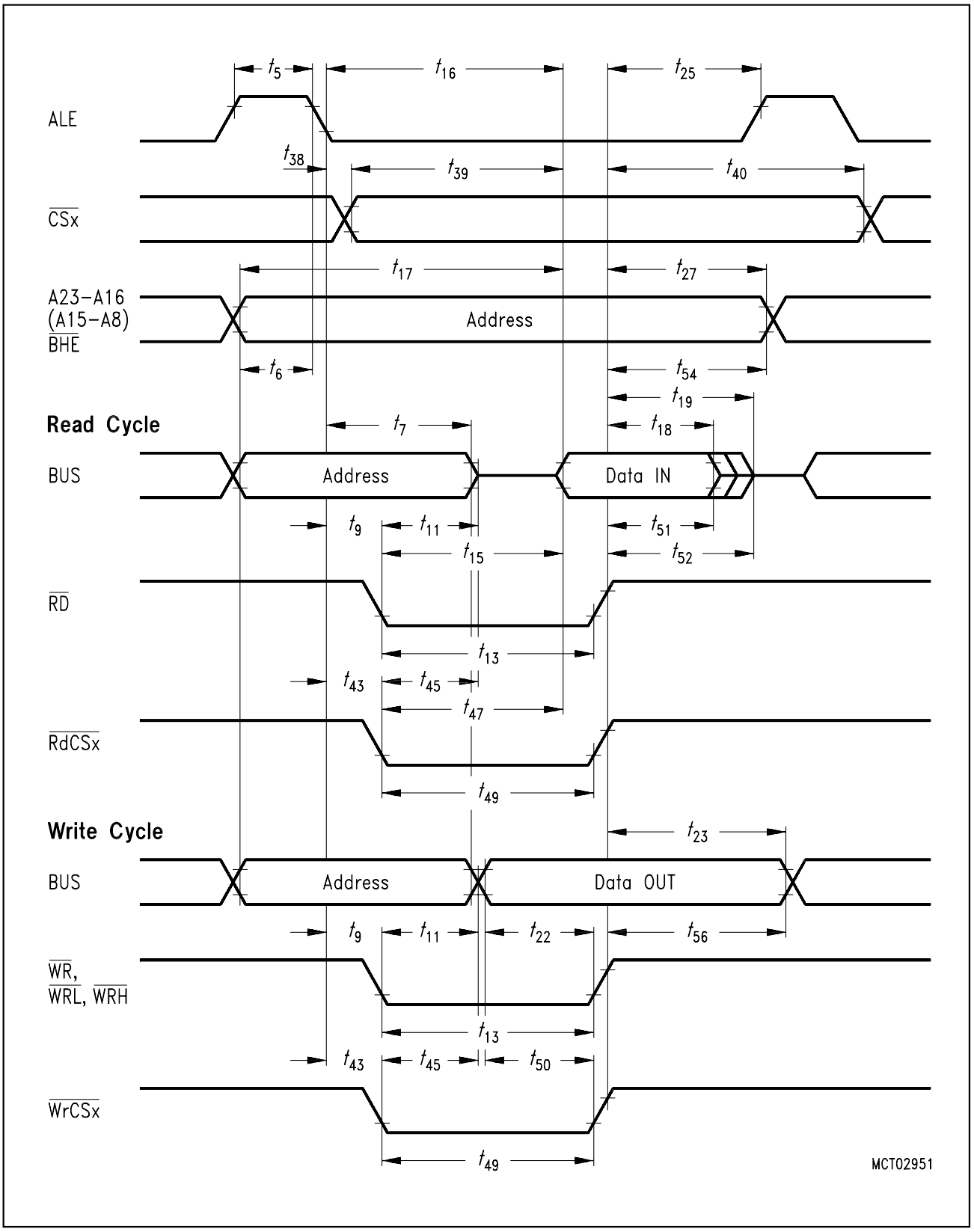

Figure 11-3
External Memory Cycle: Multiplexed Bus, No Read/Write Delay, Normal ALE

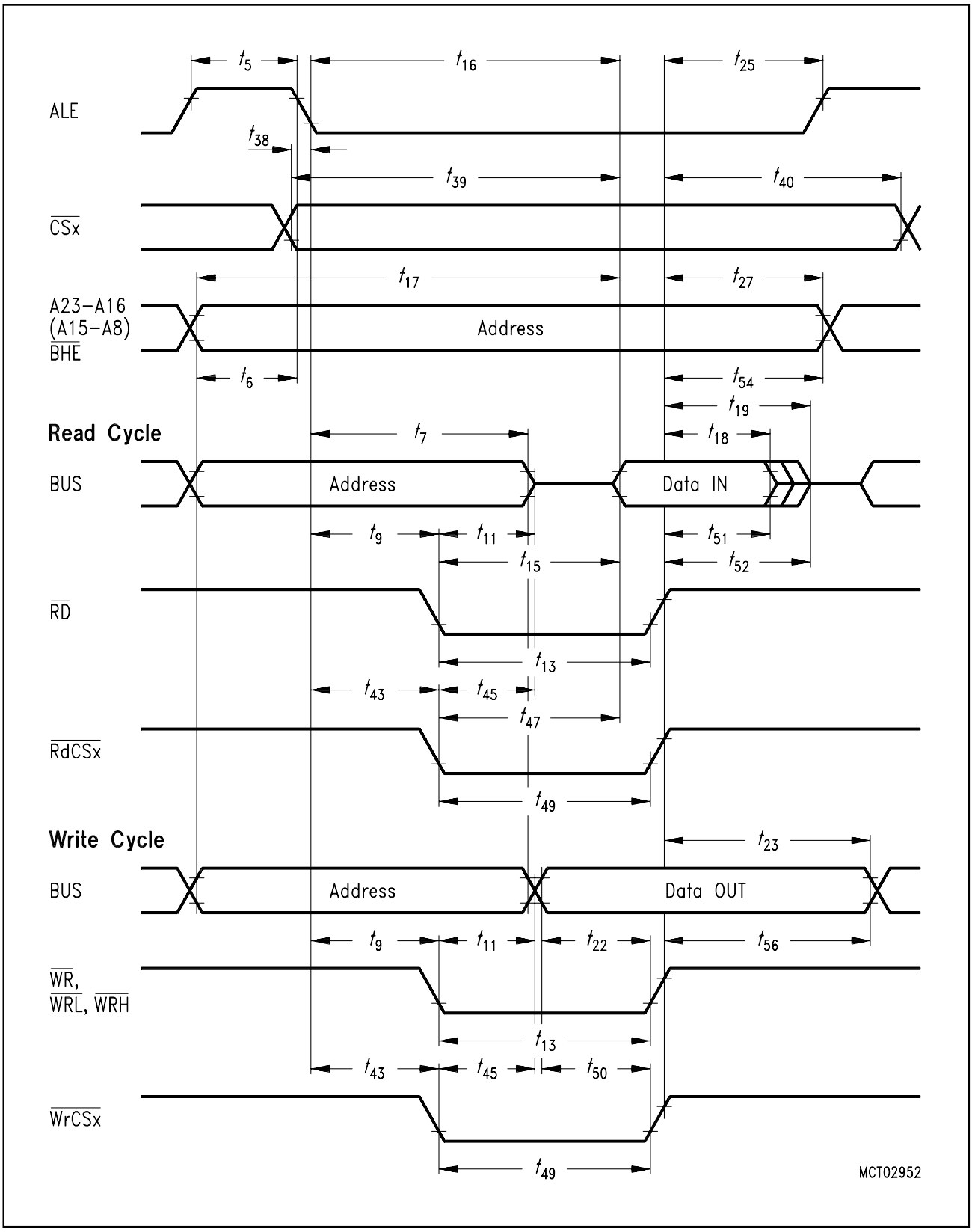

Figure 11-4
External Memory Cycle: Multiplexed Bus, No Read/Write Delay, Extended ALE

AC Characteristics (cont'd)
Demultiplexed Bus
V_{CC} = 5 V ± 10 %; V_{SS} = 0 V
T_A = 0 to +70 °C for SAB-C161K-L16M, SAB-C161O-L16M
(SAB-C161V-L16M does not provide the demultiplexed bus modes)
C_L (for PORT0, PORT1, Port 4, ALE, $\overline{RD}$, $\overline{WR}$, $\overline{BHE}$, CLKOUT) = 100 pF
C_L (for Port 6, $\overline{CS}$) = 100 pF
ALE cycle time = 4 TCL + 2t_A + t_C + t_F (125 ns at 16-MHz CPU clock without waitstates)

Parameter	Symbol		Max. CPU Clock = 16 MHz		Variable CPU Clock 1/2TCL = 1 to 16 MHz		Unit
			min.	max.	min.	max.	
ALE high time	t_5	CC	21 + t_A	–	TCL - 10 + t_A	–	ns
Address setup to ALE	t_6	CC	16 + t_A	–	TCL - 15 + t_A	–	ns
ALE falling edge to $\overline{RD}$, $\overline{WR}$ (with RW-delay)	t_8	CC	21 + t_A	–	TCL - 10 + t_A	–	ns
ALE falling edge to $\overline{RD}$, $\overline{WR}$ (no RW-delay)	t_9	CC	-10 + t_A	–	-10 + t_A	–	ns
$\overline{RD}$, $\overline{WR}$ low time (with RW-delay)	t_{12}	CC	53 + t_C	–	2TCL - 10 + t_C	–	ns
$\overline{RD}$, $\overline{WR}$ low time (no RW-delay)	t_{13}	CC	84 + t_C	–	3TCL - 10 + t_C	–	ns
$\overline{RD}$ to valid data in (with RW-delay)	t_{14}	SR	–	43 + t_C	–	2TCL - 20 + t_C	ns
$\overline{RD}$ to valid data in (no RW-delay)	t_{15}	SR	–	74 + t_C	–	3TCL - 20 + t_C	ns
ALE low to valid data in	t_{16}	SR	–	74 + t_A + t_C	–	3TCL - 20 + t_A + t_C	ns
Address to valid data in	t_{17}	SR	–	95 + 2t_A + t_C	–	4TCL - 30 + 2t_A + t_C	ns
Data hold after $\overline{RD}$ rising edge	t_{18}	SR	0	–	0	–	ns
Data float after $\overline{RD}$ rising edge (with RW-delay)	t_{20}	SR	–	48 + t_F	–	2TCL - 15 + t_F	ns
Data float after $\overline{RD}$ rising edge (no RW-delay)	t_{21}	SR	–	21 + t_F	–	TCL - 10 + t_F	ns
Data valid to $\overline{WR}$	t_{22}	CC	48 + t_C	–	2TCL - 15 + t_C	–	ns
Data hold after $\overline{WR}$	t_{24}	CC	21 + t_F	–	TCL - 10 + t_F	–	ns
ALE rising edge after $\overline{RD}$, $\overline{WR}$	t_{26}	CC	-10 + t_F	–	-10 + t_F	–	ns

Parameter	Symbol		Max. CPU Clock = 16 MHz		Variable CPU Clock 1/2TCL = 1 to 16 MHz		Unit
			min.	max.	min.	max.	
Address hold after $\overline{RD}$, $\overline{WR}$	t_{28}	CC	0 + t_F	–	0 + t_F	–	ns
ALE falling edge to $\overline{CS}$	t_{38}	CC	-5 - t_A	10 - t_A	-5 - t_A	10 - t_A	ns
$\overline{CS}$ low to Valid Data In	t_{39}	SR	–	74 + t_C + 2t_A	–	3TCL - 20 + t_C + 2t_A	ns
$\overline{CS}$ hold after $\overline{RD}$, $\overline{WR}$	t_{41}	CC	16 + t_F	–	TCL - 15 + t_F	–	ns
ALE falling edge to $\overline{RdCS}$, $\overline{WrCS}$ (with RW-delay)	t_{42}	CC	26 + t_A	–	TCL - 5 + t_A	–	ns
ALE falling edge to $\overline{RdCS}$, $\overline{WrCS}$ (no RW-delay)	t_{43}	CC	-5 + t_A	–	-5 + t_A	–	ns
$\overline{RdCS}$ to Valid Data In (with RW-delay)	t_{46}	SR	–	38 + t_C	–	2TCL - 25 + t_C	ns
$\overline{RdCS}$ to Valid Data In (no RW-delay)	t_{47}	SR	–	69 + t_C	–	3TCL - 25 + t_C	ns
$\overline{RdCS}$, $\overline{WrCS}$ Low Time (with RW-delay)	t_{48}	CC	53 + t_C	–	2TCL - 10 + t_C	–	ns
$\overline{RdCS}$, $\overline{WrCS}$ Low Time (no RW-delay)	t_{49}	CC	84 + t_C	–	3TCL - 10 + t_C	–	ns
Data valid to $\overline{WrCS}$	t_{50}	CC	48 + t_C	–	2TCL - 15 + t_C	–	ns
Data hold after $\overline{RdCS}$	t_{51}	SR	0	–	0	–	ns
Data float after $\overline{RdCS}$ (with RW-delay)	t_{53}	SR	–	43 + t_F	–	2TCL - 20 + t_F	ns
Data float after $\overline{RdCS}$ (no RW-delay)	t_{68}	SR	–	11 + t_F	–	TCL - 20 + t_F	ns
Address hold after $\overline{RdCS}$, $\overline{WrCS}$	t_{55}	CC	-5 + t_F	–	-5 + t_F	–	ns
Data hold after $\overline{WrCS}$	t_{57}	CC	16 + t_F	–	TCL - 15 + t_F	–	ns

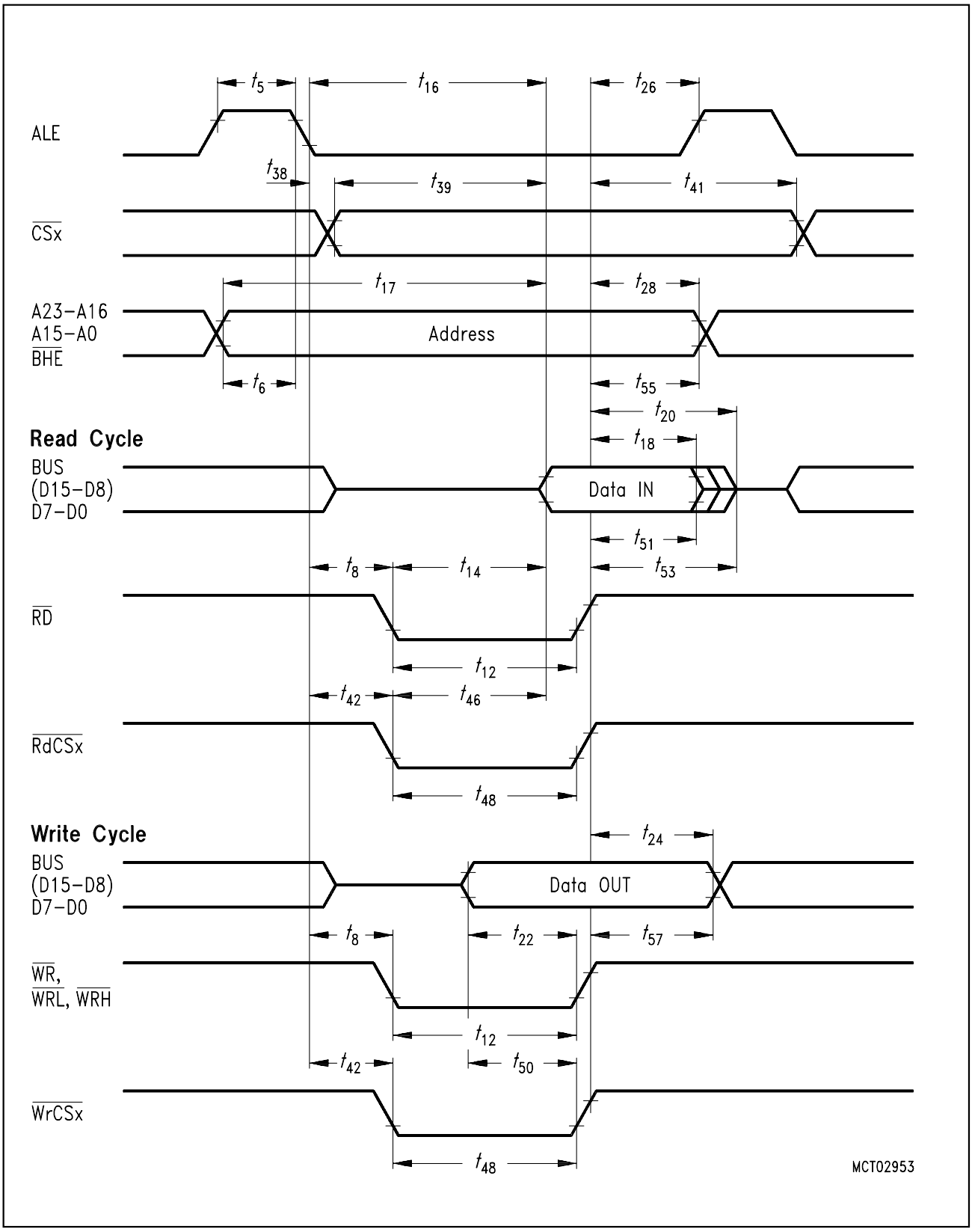

Figure 12-1
External Memory Cycle: Demultiplexed Bus, With Read/Write Delay, Normal ALE

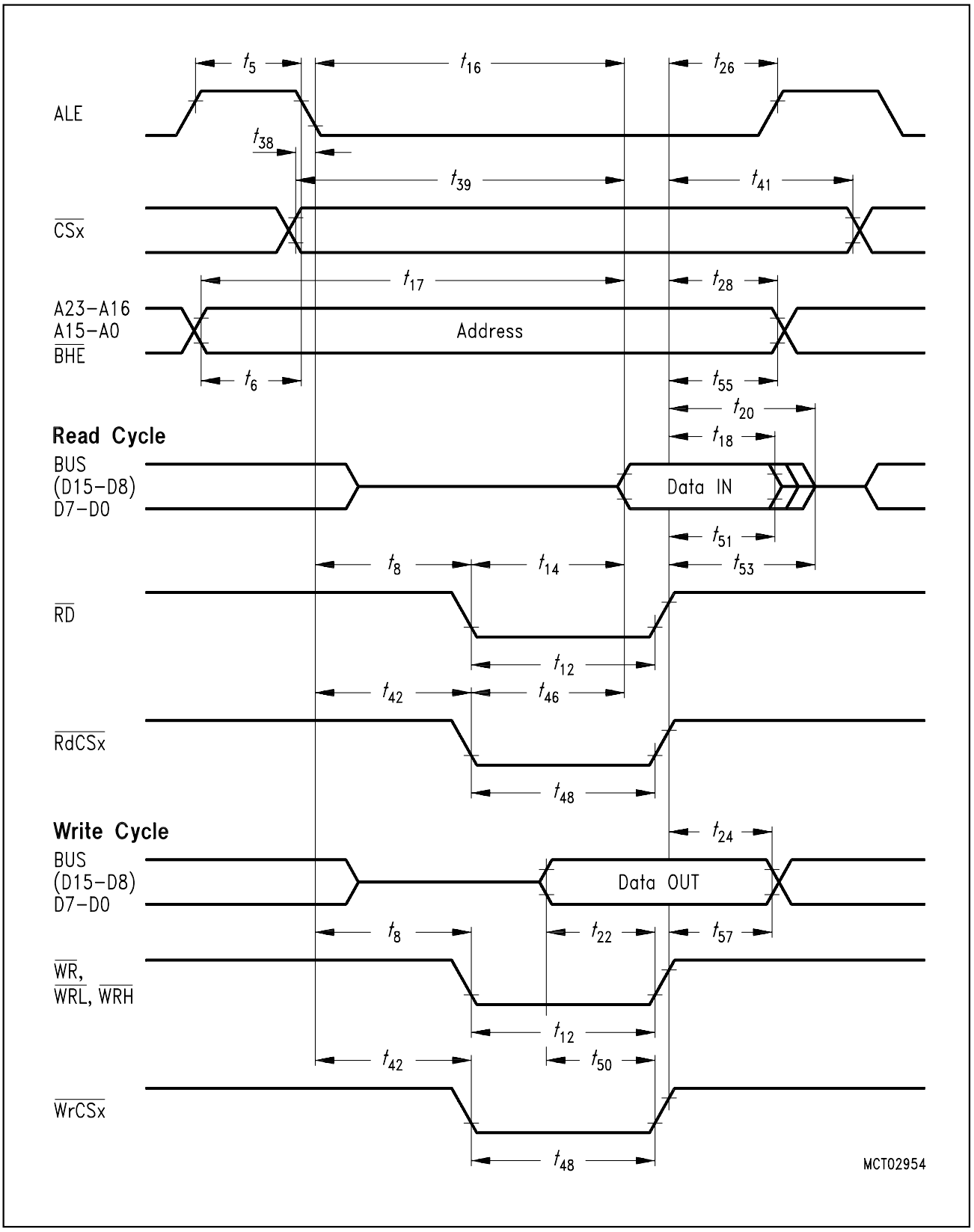

Figure 12-2
External Memory Cycle: Demultiplexed Bus, With Read/Write Delay, Extended ALE

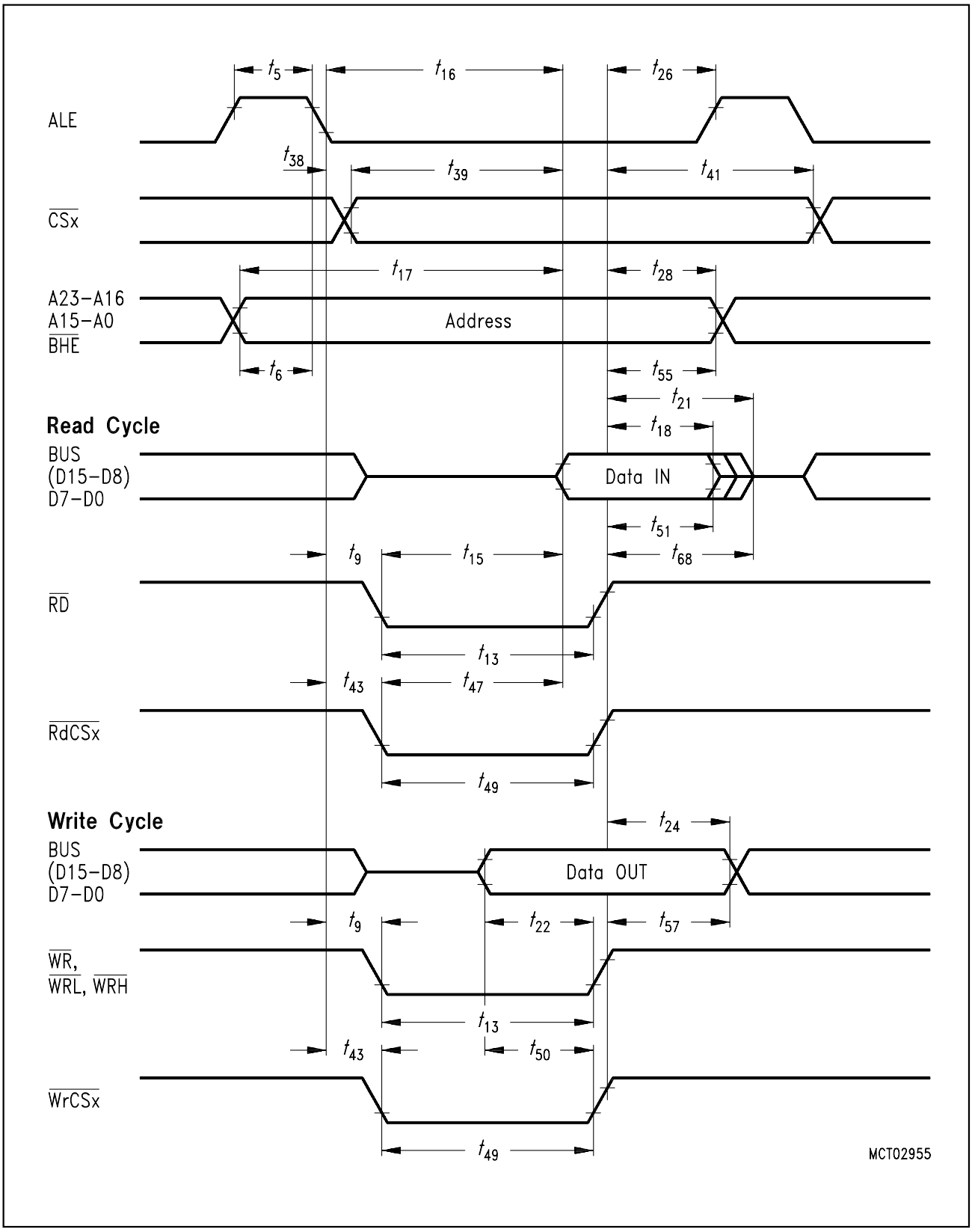

Figure 12-3
External Memory Cycle: Demultiplexed Bus, No Read/Write Delay, Normal ALE

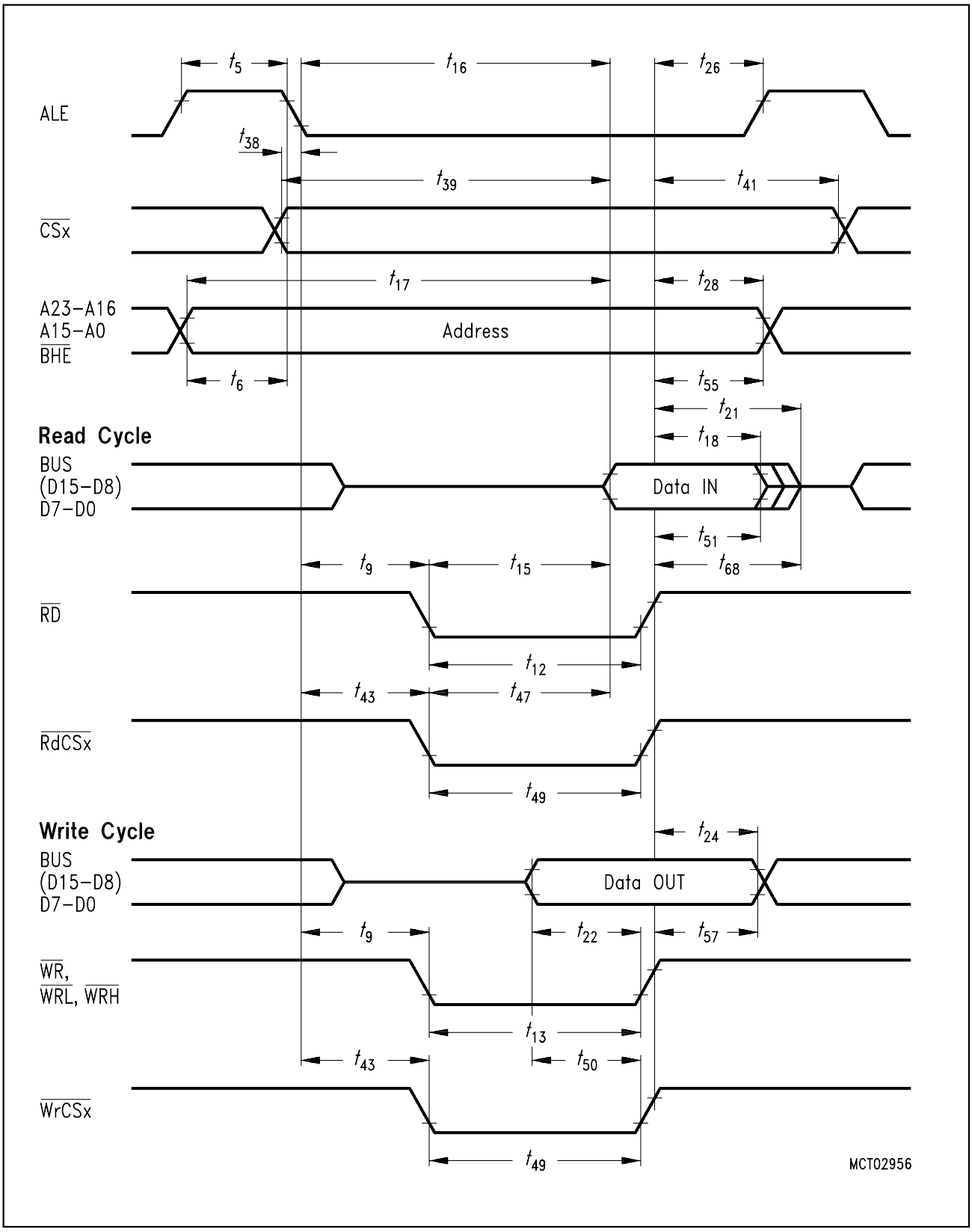

Figure 12-4
External Memory Cycle: Demultiplexed Bus, No Read/Write Delay, Extended ALE