MOTOROLA

SEMICONDUCTORS

P.O. BOX 20912 • PHOENIX, ARIZONA 85036

MHW4524F

Product Preview

FEEDFORWARD

The RF Line

24 dB GAIN

450 MHz

60-CHANNEL CATV HYBRID AMPLIFIER

450 MHz CATV HYBRID AMPLIFIER

- Fully Integrated Feedforward Amplifier
- Specifically Designed To Provide Improved Performance in 450 MHz CATV Applications
- Distortion Components Reduced More Than 20 dB from Conventional CATV Hybrid Amplifiers
- Specified For 60-Channel Performance
- Third Generation CATV Transistor Technology with All Gold Metallization and 6.0 GHz f_T
- Hybrid Thin-Film Technology Used Throughout For Optimum Performance and High Reliability

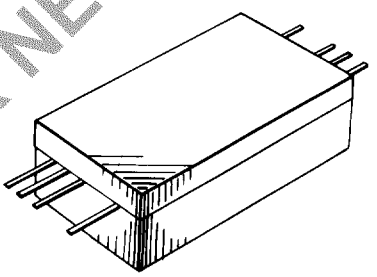

OUTLINE DIMENSION FOR PROTOTYPE PACKAGE

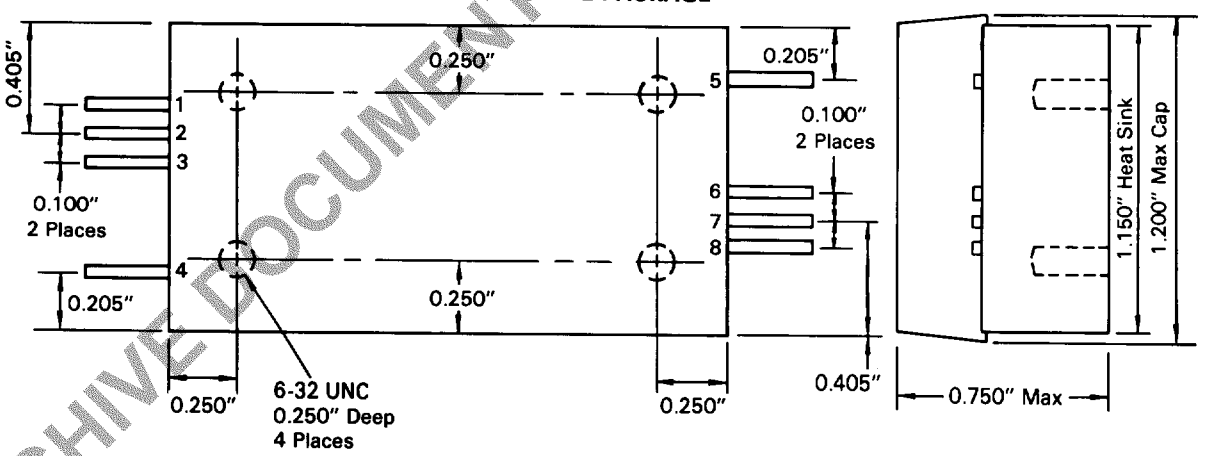

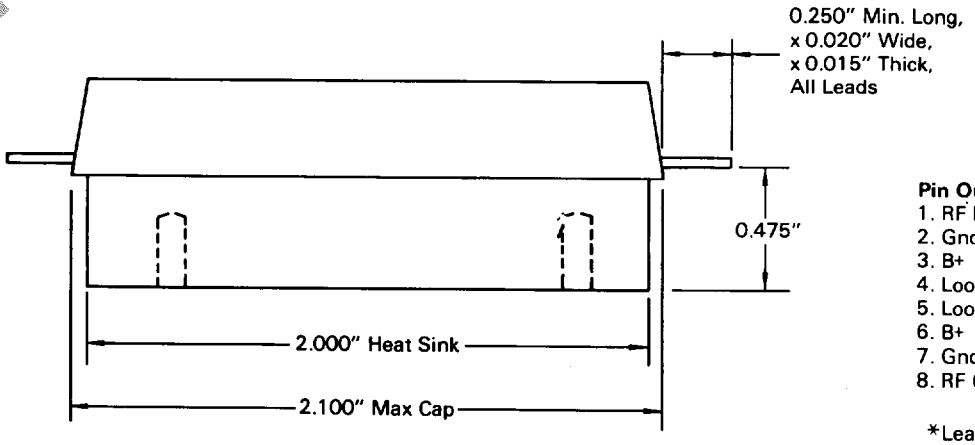

Pin Out:
1. RF In
2. Gnd
3. B+
4. Loop Test*
5. Loop Test*
6. B+
7. Gnd
8. RF Out

*Leave Unconnected

NOTE: Not to be used for production tooling.

ARCHIVE DOCUMENT – NOT FOR NEW DESIGN

This document contains information on a product under development. Motorola reserves the right to change or discontinue this product without notice.

© MOTOROLA INC., 1983

NOTE: All electrical specifications listed below are design targets and subject to change.

ABSOLUTE MAXIMUM RATINGS

Rating	Symbol	Value	Unit
RF Voltage Input	V_{in}	+65	dBmV
DC Supply Voltage	V_{CC}	+28	Vdc
Operating Case Temperature Range	T_C	−20 to +90	°C
Storage Temperature Range	T_{stg}	−60 to +90	°C

ELECTRICAL CHARACTERISTICS (V_{CC} = 24 Vdc, T_A = +25°C, 75 Ω system unless otherwise noted)

Characteristic		Symbol	Min	Typ	Max	Unit
Frequency Range		BW	40	—	450	MHz
Power Gain—50 MHz		G_p	23.3	24.0	24.7	dB
Slope		S	−0.5	0.3	1.0	dB
Gain Flatness		—	—	±0.1	±0.2	dB
Return Loss—Input/Output (Z_o = 75 Ohms)		IRL/ORL	18	—	—	dB
Composite Second Order Distortion (V_{out} = +46 dBmV)	60-Channel FLAT	CSO_{60}	—	—	TBD*	dB
Cross Modulation Distortion (V_{out} = +46 dBmV)	60-Channel FLAT	XM_{60}	—	—	−79	dB
Composite Triple Beat (V_{out} = +46 dBmV)	60-Channel FLAT	CTB_{60}	—	—	−79	dB
Noise Figure (f = 450 MHz)		NF	—	8.0	8.5	dB
DC Current (V_{DC} = 24 ±0.5 Vdc, T_C = 30°C)		I_{DC}	—	—	650	mA

*To Be Determined.

FIGURE 1 - MHW4524F FEEDFORWARD AMPLIFIER BLOCK DIAGRAM

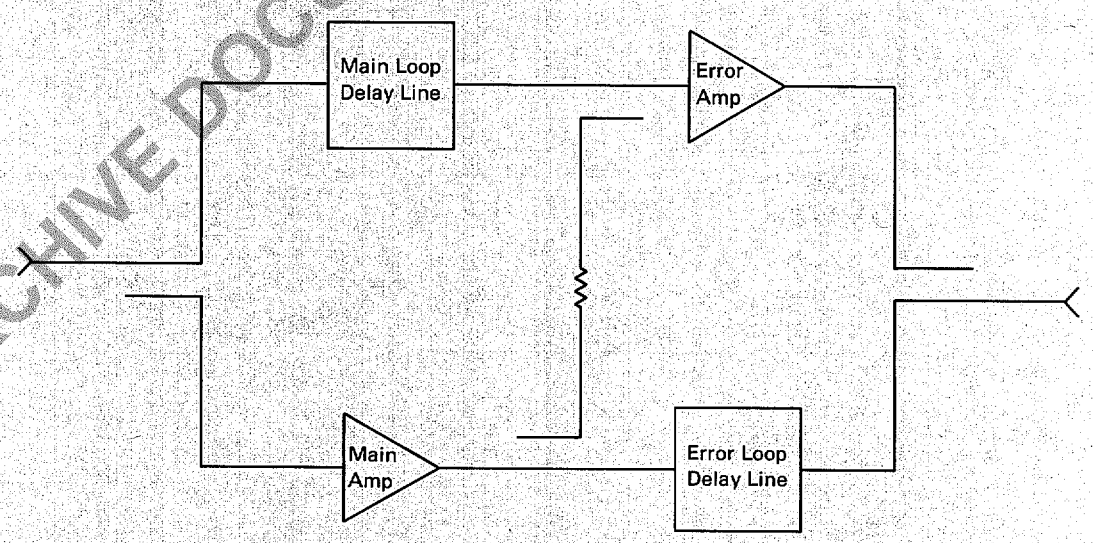

ARCHIVE DOCUMENT - NOT FOR NEW DESIGN

Motorola reserves the right to make changes to any products herein to improve reliability, function or design. Motorola does not assume any liability arising out of the application or use of any product or circuit described herein; neither does it convey any license under its patent rights nor the rights of others.

MOTOROLA *Semiconductor Products Inc.*

BOX 20912 • PHOENIX, ARIZONA 85036 • A SUBSIDIARY OF MOTOROLA INC.

16947 PRINTED IN USA 6-83 IMPERIAL LITHO C14268 1,000

NP-157

MOTOROLA
SEMICONDUCTORS
P.O. BOX 20912 • PHOENIX, ARIZONA 85036

MHW4524F

Advance Information

FEEDFORWARD

The RF Line

24 dB GAIN

450 MHz

60-CHANNEL CATV HYBRID AMPLIFIER

450 MHz CATV HYBRID AMPLIFIER

- Fully Integrated Feedforward Amplifier
- Specifically Designed To Provide Improved Performance in 450 MHz CATV Applications
- Distortion Components Reduced More Than 20 dB from Conventional CATV Hybrid Amplifiers
- Specified For 60-Channel Performance
- Third Generation CATV Transistor Technology with All Gold Metallization and 6.0 GHz f_T
- Hybrid Thin-Film Technology Used Throughout For Optimum Performance and High Reliability

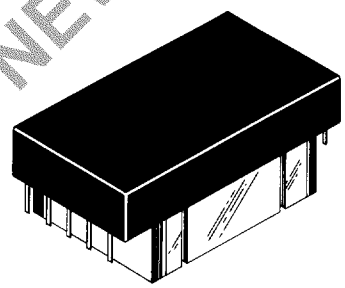

ARCHIVE DOCUMENT - NOT FOR NEW DESIGN

OUTLINE DIMENSIONS

STYLE 1:

PIN 1. GROUND	6. LOOP
2. RF INPUT	7. B +
3. GROUND	8. GROUND
4. B +	9. RF OUTPUT
5. LOOP	10. GROUND

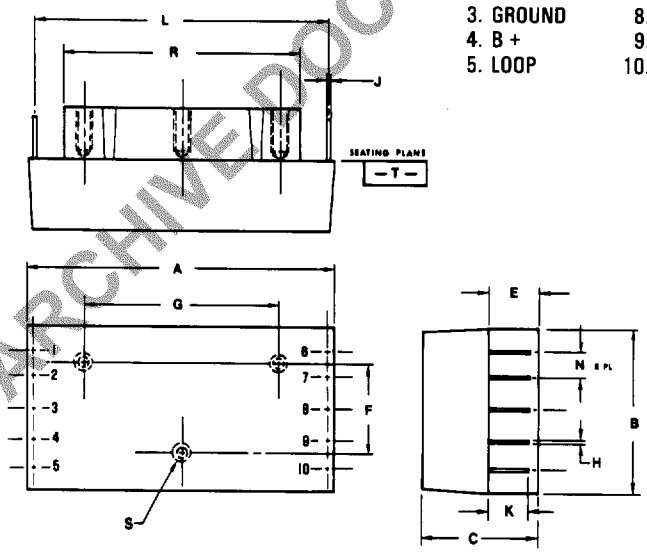

NOTES:
1. DIMENSIONS A AND B ARE DATUMS AND -T- IS A DATUM SURFACE.
2. POSITIONAL TOLERANCE FOR LEADS: H AND J DIMENSIONS
   ⌖ .25 (0.010) Ⓜ T A Ⓜ B Ⓜ
   MEASURED AT SEATING PLANE.
3. POSITIONAL TOLERANCE FOR S MINOR DIAMETERS:
   ⌖ ϕ 0.25 (0.010) Ⓜ A Ⓜ B Ⓜ T
4. DIMENSIONING AND TOLERANCING PER ASTM Y14.5, 1982.
5. CONTROLLING DIMENSION: INCH.

	MILLIMETERS		INCHES	
DIM	MIN	MAX	MIN	MAX
A	52.96	53.46	2.085	2.105
B	28.32	28.70	1.115	1.130
C	21.08	21.59	0.830	0.850
E	11.18	11.43	0.440	0.450
F	15.87 BSC		0.625 BSC	
G	34.16 BSC		1.345 BSC	
H	0.46	0.55	0.018	0.022
J	0.20	0.30	0.008	0.012
K	–	7.62	–	0.300
L	50.92 BSC		2.005 BSC	
N	5.08 BSC		0.200 BSC	
R	40.64 BSC		1.600 BSC	
Q	–	–	6-32 UNC-2B	

CASE 774-01

This document contains information on a new product. Specifications and information herein are subject to change without notice.

© MOTOROLA INC., 1983

NOTE: All electrical specifications listed below are design targets and subject to change.

ABSOLUTE MAXIMUM RATINGS

Rating	Symbol	Value	Unit
RF Voltage Input	V_{in}	+65	dBmV
DC Supply Voltage	V_{CC}	+28	Vdc
Operating Case Temperature Range	T_C	−20 to +90	°C
Storage Temperature Range	T_{stg}	−60 to +90	°C

ELECTRICAL CHARACTERISTICS (V_{CC} = 24 Vdc, T_A = +25°C, 75 Ω system unless otherwise noted)

Characteristic		Symbol	Min	Typ	Max	Unit
Frequency Range		BW	40	—	450	MHz
Power Gain — 50 MHz		G_p	23.3	24.0	24.7	dB
Slope		S	−0.5	0.3	1.0	dB
Gain Flatness		—	—	±0.1	±0.2	dB
Return Loss — Input/Output (Z_o = 75 Ohms)		IRL/ORL	18	—	—	dB
Composite Second Order Distortion (V_{out} = +46 dBmV)	60-Channel FLAT	CSO_{60}		—	TBD*	dB
Cross Modulation Distortion (V_{out} = +46 dBmV)	60-Channel FLAT	XM_{60}	—	—	−79	dB
Composite Triple Beat (V_{out} = +46 dBmV)	60-Channel FLAT	CTB_{60}	—	—	−79	dB
Noise Figure (f = 450 MHz)		NF	—	8.0	8.5	dB
DC Current (V_{DC} = 24 ±0.5 Vdc, T_C = 30°C)		I_{DC}	—	—	650	mA

*To Be Determined.

FIGURE 1 — MHW4524F FEEDFORWARD AMPLIFIER BLOCK DIAGRAM

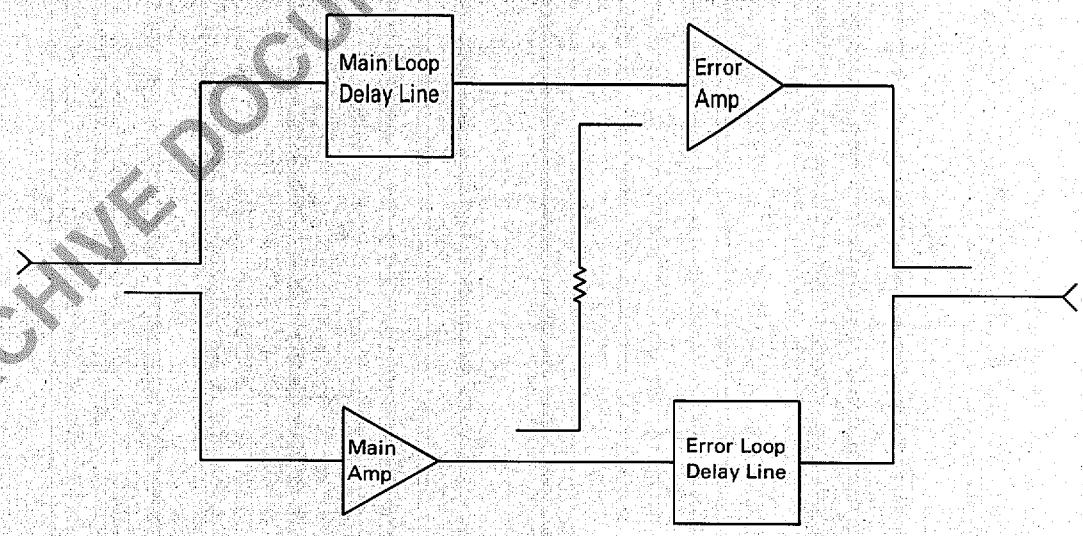

ARCHIVE DOCUMENT - NOT FOR NEW DESIGN

Motorola reserves the right to make changes without further notice to any products herein to improve reliability, function or design. Motorola does not assume any liability arising out of the application or use of any product or circuit described herein; neither does it convey any license under its patent rights nor the rights of others. Motorola and Ⓜ are registered trademarks of Motorola, Inc. Motorola, Inc. is an Equal Employment Opportunity/ Affirmative Action Employer.

MOTOROLA *Semiconductor Products Inc.*

BOX 20912 • PHOENIX, ARIZONA 85036 • A SUBSIDIARY OF MOTOROLA INC.

16947-1 PRINTED IN USA 12-83 IMPERIAL LITHO C18376 1,000

ADI-1053