THIS DRAWING IS UNPUBLISHED. RELEASED FOR PUBLICATION
© COPYRIGHT BY TYCO ELECTRONICS CORPORATION. ALL RIGHTS RESERVED.

LOC	DIST
J	

REVISIONS

P	LTR	DESCRIPTION	DATE	DWN	APVD
	G	REVISED FJB0-0261-03	09MAY03	T.T	H.M

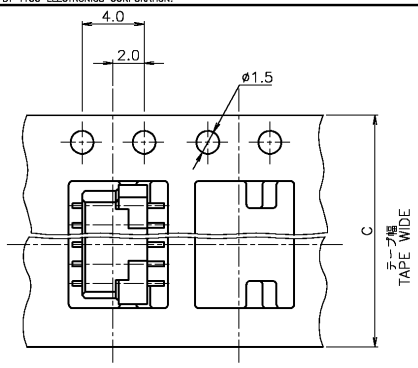

12 個以上
12 Pos.AND MORE

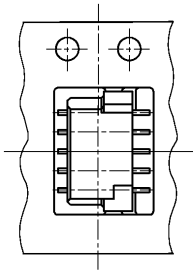

10 個
10 Pos.

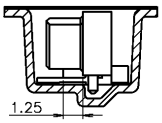

22,24 個(リブ改良型)
22,24 Pos.(IMPROVED TYPE)

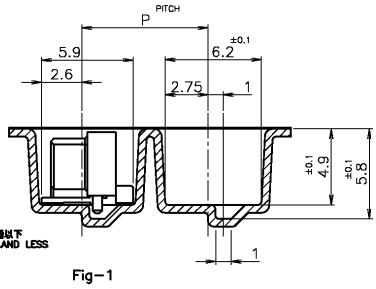

20 個以下
20 Pos.AND LESS

Fig-1

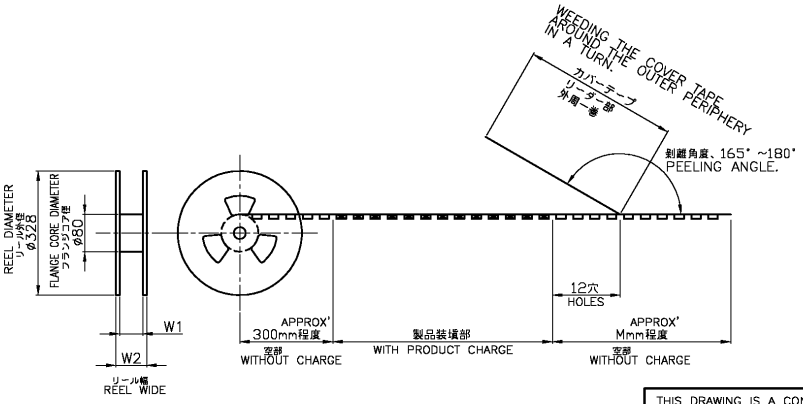

						24	2-	-4	5-	-4	5-	-4
						22	2-	-2	5-	-2	5-	-2
						20	2-	-0	5-	-0	5-	-0
						18	1-	-8	4-	-8	4-	-8
29	26	600	12	24	1000	16	1-	-6	4-	-6	4-	-6
						14	1-	-4	4-	-4	4-	-4
						12	1-	-2	4-	-2	4-	-2
						10	1-912051-0		4-	-0	4-	-0
21	18	300	8	16	1500	6	6-912053-6		3-174640-6		3-175639-6	
W_2	W_1	M	P	C	数量 (巾) QTY/REEL	極数 Pos.	エンボステープ品番 EMBOSS TAPE P/N		コネクタ部番 (バラ品) CONNECTOR P/N		リール巻コネクタ部番 TAPING P/N	

注記；
⚠ 包装規格：107-5123-1
NOTES;
⚠ PACKING SPEC : 107-5123-1

THIS DRAWING IS A CONTROLLED DOCUMENT.

DIMENSIONS: MM

TOLERANCES UNLESS OTHERWISE SPECIFIED:
0 PLC ±
1 PLC ±
2 PLC ±
3 PLC ±
4 PLC ±
ANGLES ±
1桁下 : ±0.2
2桁以上 3桁下 : ±0.25
3桁以上 5桁下 : ±0.3
角度 : ±3°

MATERIAL
FINISH

DWN	J.TANIGAWA	28MAY98
CHK	S.KIKUCHI	30MAY98
APVD	N.ONOUE	30MAY98
PRODUCT SPEC		
APPLICATION SPEC		
WEIGHT		

tyco Electronics
Tyco Electronics AMP K.K.
Kawasaki, Japan

NAME
ON TAPING (EMBOSS)1.25 F-P CONNECTOR (B-TO-B)
DOUBLE ROW REC HDR ASS'Y (H)
SMT TYPE WITH BOSS

SIZE	CAGE CODE	DRAWING NO	RESTRICTED TO
A3	00779	C-175639	—

CUSTOMER DRAWING

SCALE	SHEET	OF	REV
NON	1	1	G

AMP 1470-19 REV 31MAR2000

17JUL2002 4:24pm L:\EN22_CadData\AutoCAD\fj014986_tsuzaki\POOL\C-175639.dwg

Downloaded from Elcodis.com electronic components distributor