# Am29F032B

*Data Sheet*

The following document contains information on Spansion memory products.

## Continuity of Specifications

There is no change to this data sheet as a result of offering the device as a Spansion product. Any changes that have been made are the result of normal data sheet improvement and are noted in the document revision summary.

## For More Information

Please contact your local sales office for additional information about Spansion memory solutions.

**Publication Number** 21610 **Revision** D **Amendment** 8 **Issue Date** November 11, 2009

Downloaded from Elcodis.com electronic components distributor

This page left intentionally blank.



Downloaded from Elcodis.com electronic components distributor

DATA SHEET

# Am29F032B

## 32 Megabit (4 M x 8-Bit) CMOS 5.0 Volt-only, Uniform Sector Flash Memory

## DISTINCTIVE CHARACTERISTICS

- **5.0 V ± 10%, single power supply operation**
  - Minimizes system level power requirements
- **Manufactured on 0.32 µm process technology**
- **High performance**
  - Access times as fast as 70 ns
- **Low power consumption**
  - 30 mA typical active read current
  - 30 mA typical program/erase current
  - <1 µA typical standby current (standard access time to active mode)
- **Flexible sector architecture**
  - 64 uniform sectors of 64 Kbytes each
  - Any combination of sectors can be erased.
  - Supports full chip erase
  - Group sector protection:
  - A hardware method of locking sector groups to prevent any program or erase operations within that sector group
  - Temporary Sector Group Unprotect allows code changes in previously locked sectors
- **Embedded Algorithms**
  - Embedded Erase algorithm automatically preprograms and erases the entire chip or any combination of designated sectors
  - Embedded Program algorithm automatically writes and verifies bytes at specified addresses
- **Minimum 1,000,000 write/erase cycles guaranteed**
- **20-year data retention at 125° C**
  - Reliable operation for the life of the system
- **Package options**
  - 40-pin TSOP
  - 44-pin SO
- **Compatible with JEDEC standards**
  - Pinout and software compatible with single-power-supply Flash standard
  - Superior inadvertent write protection
- **Data# Polling and toggle bits**
  - Provides a software method of detecting program or erase cycle completion
- **Ready/Busy output (RY/BY#)**
  - Provides a hardware method for detecting program or erase cycle completion
- **Erase Suspend/Resume**
  - Suspends a sector erase operation to read data from, or program data to, a non-erasing sector, then resumes the erase operation
- **Hardware reset pin (RESET#)**
  - Resets internal state machine to the read mode

This Data Sheet states AMD's current technical specifications regarding the Products described herein. This Data Sheet may be revised by subsequent versions or modifications due to changes in technical specifications.

Publication# **21610** Rev: **D** Amendment: **8**
Issue Date: **November 11, 2009**

Downloaded from Elcodis.com electronic components distributor

## GENERAL DESCRIPTION

The Am29F032B is a 32 Mbit, 5.0 volt-only Flash memory organized as 4,194,304 bytes of 8 bits each. The 4 Mbytes of data are divided into 64 sectors of 64 Kbytes each for flexible erase capability. The 8 bits of data appear on DQ0–DQ7. The Am29F032B is offered in 40-pin TSOP and 44-pin SO packages. The Am29F032B is manufactured using AMD's 0.32 µm process technology. This device is designed to be programmed in-system with the standard system 5.0 volt $V_{CC}$ supply. A 12.0 volt $V_{PP}$ is not required for program or erase operations. The device can also be programmed in standard EPROM programmers.

The standard device offers access times of 70 and 90 ns, allowing high-speed microprocessors to operate without wait states. To eliminate bus contention, the device has separate chip enable (CE#), write enable (WE#), and output enable (OE#) controls.

The device is entirely command set compatible with the JEDEC single-power-supply Flash standard. Commands are written to the command register using standard microprocessor write timings. Register contents serve as input to an internal state machine that controls the erase and programming circuitry. Write cycles also internally latch addresses and data needed for the programming and erase operations. Reading data out of the device is similar to reading from 12.0 volt Flash or EPROM devices.

The device is programmed by executing the program command sequence. This invokes the Embedded Program algorithm—an internal algorithm that automatically times the program pulse widths and verifies proper cell margin. The device is erased by executing the erase command sequence. This invokes the Embedded Erase algorithm—an internal algorithm that automatically preprograms the array (if it is not already programmed) before executing the erase operation. During erase, the device automatically times the erase pulse widths and verifies proper cell margin.

The sector erase architecture allows memory sectors to be erased and reprogrammed without affecting the data contents of other sectors. A sector is typically erased and verified within one second. The device is erased when shipped from the factory.

The hardware sector group protection feature disables both program and erase operations in any combination of the eight sector groups of memory. A sector group consists of four adjacent sectors.

The Erase Suspend feature enables the system to put erase on hold for any period of time to read data from, or program data to, a sector that is not being erased. True background erase can thus be achieved.

The device requires only a single 5.0 volt power supply for both read and write functions. Internally generated and regulated voltages are provided for the program and erase operations. A low $V_{CC}$ detector automatically inhibits write operations during power transitions. The host system can detect whether a program or erase cycle is complete by using the RY/BY# pin, the DQ7 (Data# Polling) or DQ6 (toggle) status bits. After a program or erase cycle has been completed, the device automatically returns to the read mode.

A hardware RESET# pin terminates any operation in progress. The internal state machine is reset to the read mode. The RESET# pin may be tied to the system reset circuitry. Therefore, if a system reset occurs during either an Embedded Program or Embedded Erase algorithm, the device is automatically reset to the read mode. This enables the system's microprocessor to read the boot-up firmware from the Flash memory.

AMD's Flash technology combines years of Flash memory manufacturing experience to produce the highest levels of quality, reliability, and cost effectiveness. The device electrically erases all bits within a sector simultaneously via Fowler-Nordheim tunneling. The bytes are programmed one byte at a time using the programming mechanism of hot electron injection.



Downloaded from Elcodis.com electronic components distributor

## TABLE OF CONTENTS

**Product Selector Guide** . . . . . 4
**Block Diagram** . . . . . 4
**Connection Diagrams** . . . . . 5
**Pin Configuration** . . . . . 6
**Logic Symbol** . . . . . 6
**Ordering Information** . . . . . 7
**Device Bus Operations** . . . . . 8
Table 1. Am29F032B Device Bus Operations ..... 8
Requirements for Reading Array Data ..... 8
Writing Commands/Command Sequences ..... 8
Program and Erase Operation Status ..... 9
Standby Mode ..... 9
RESET#: Hardware Reset Pin ..... 9
Output Disable Mode ..... 9
Table 2. Am29F032B Sector Address Table ..... 10
Autoselect Mode ..... 11
Table 3. Am29F032B Autoselect Codes ..... 11
Sector Group Protection/Unprotection ..... 12
Table 4. Sector Group Addresses ..... 12
Temporary Sector Group Unprotect ..... 12
Figure 1. Temporary Sector Group Unprotect Operation ..... 12
Hardware Data Protection ..... 13
Low VCC Write Inhibit ..... 13
Write Pulse “Glitch” Protection ..... 13
Logical Inhibit ..... 13
Power-Up Write Inhibit ..... 13
**Command Definitions** . . . . . 13
Reading Array Data ..... 13
Reset Command ..... 13
Autoselect Command Sequence ..... 14
Byte Program Command Sequence ..... 14
Chip Erase Command Sequence ..... 14
Figure 2. Program Operation ..... 15
Sector Erase Command Sequence ..... 15
Erase Suspend/Erase Resume Commands ..... 15
Figure 3. Erase Operation ..... 16
Table 5. Am29F032B Command Definitions ..... 17
**Write Operation Status** . . . . . 18
DQ7: Data# Polling ..... 18
Figure 4. Data# Polling Algorithm ..... 18
DQ6: Toggle Bit I ..... 19
DQ2: Toggle Bit II ..... 19
Reading Toggle Bits DQ6/DQ2 ..... 19
DQ5: Exceeded Timing Limits ..... 20
DQ3: Sector Erase Timer ..... 20
Figure 5. Toggle Bit Algorithm ..... 20
Table 6. Write Operation Status ..... 21
**Absolute Maximum Ratings** . . . . . 22
Figure 6. Maximum Negative Overshoot Waveform ..... 22
Figure 7. Maximum Positive Overshoot Waveform ..... 22
**Operating Ranges** . . . . . 22
**DC Characteristics** . . . . . 23
TTL/NMOS Compatible ..... 23
CMOS Compatible ..... 23
**Test Conditions** . . . . . 24
Figure 8. Test Setup ..... 24
Table 7. Test Specifications ..... 24
**Key To Switching Waveforms** . . . . . 24
**AC Characteristics** . . . . . 25
Read-only Operations ..... 25
Figure 9. Read Operation Timings ..... 25
Hardware Reset (RESET#) ..... 26
Figure 10. RESET# Timings ..... 26
Write (Erase/Program) Operations ..... 27
Figure 11. Program Operation Timings ..... 28
Figure 12. Chip/Sector Erase Operation Timings ..... 29
Figure 13. Data# Polling Timings (During Embedded Algorithms). 30
Figure 14. Toggle Bit Timings (During Embedded Algorithms) ..... 30
Figure 15. DQ2 vs. DQ6 ..... 31
Temporary Sector Unprotect ..... 31
Figure 16. Temporary Sector Group Unprotect Timings ..... 31
Write (Erase/Program) Operations—Alternate CE# Controlled Writes ..... 32
Figure 17. Alternate CE# Controlled Write Operation Timings ..... 33
**Erase And Programming Performance** . . . . . 34
**Latchup Characteristic** . . . . . 34
**TSOP And SO Pin Capacitance** . . . . . 34
**Data Retention** . . . . . 34
**Physical Dimensions** . . . . . 35
SO 044–44-Pin Small Outline Package ..... 35
TS 040–40-Pin Standard Thin Small Outline Package ..... 36
**Revision Summary** . . . . . 37



Downloaded from Elcodis.com electronic components distributor

## PRODUCT SELECTOR GUIDE

| Family Part Number | | Am29F032B | |
|---|---|---|---|
| Speed Options | $V_{CC}$ = 5.0 V ±5% | **-75** | |
| | $V_{CC}$ = 5.0 V ±10% | | **-90** |
| Max access time, ns ($t_{ACC}$) | | 70 | 90 |
| Max CE# access time, ns ($t_{CE}$) | | 70 | 90 |
| Max OE# access time, ns ($t_{OE}$) | | 40 | 40 |

***Note:*** *See "AC Characteristics" for full specifications.*

## BLOCK DIAGRAM

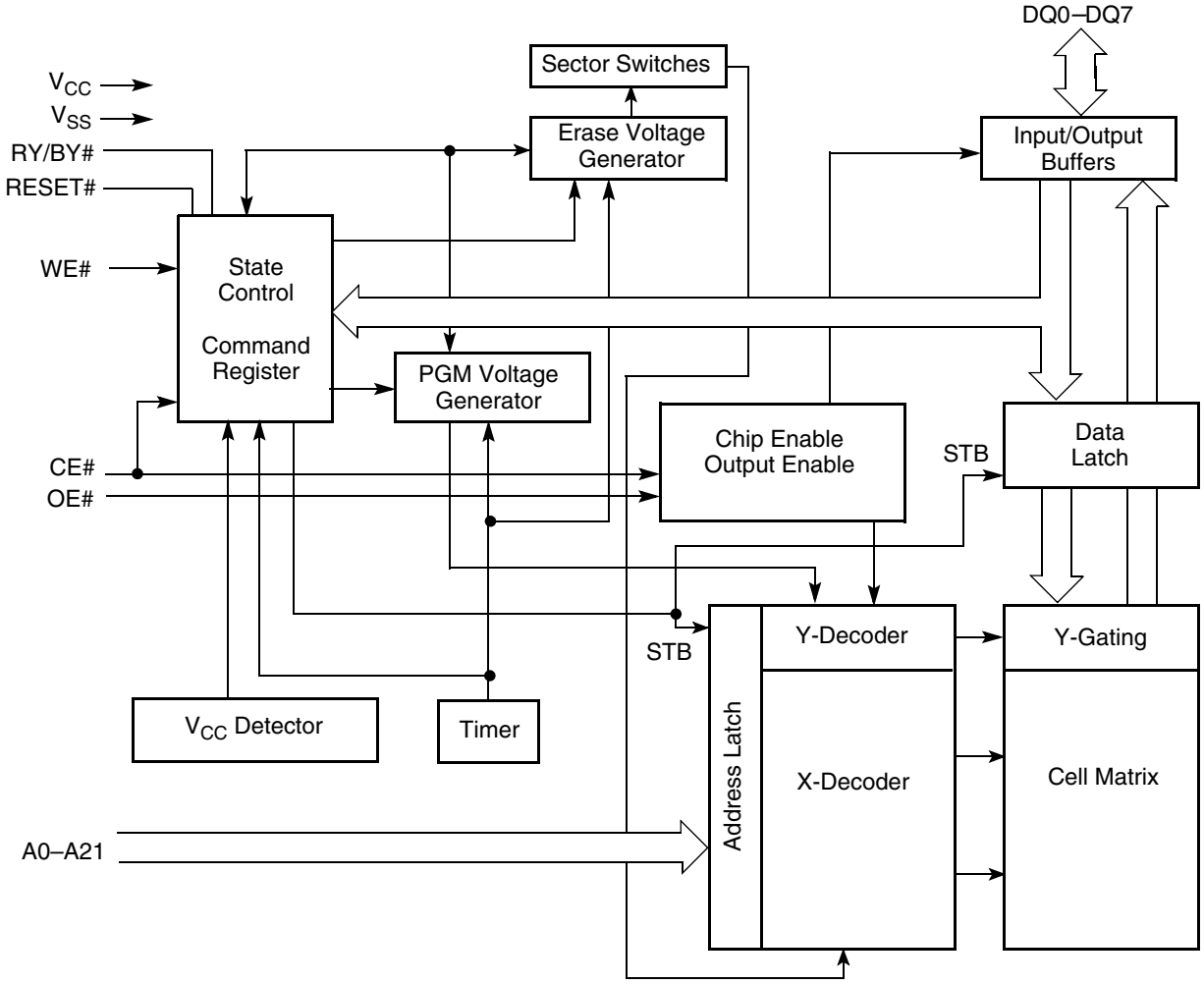




Downloaded from Elcodis.com electronic components distributor

## CONNECTION DIAGRAMS

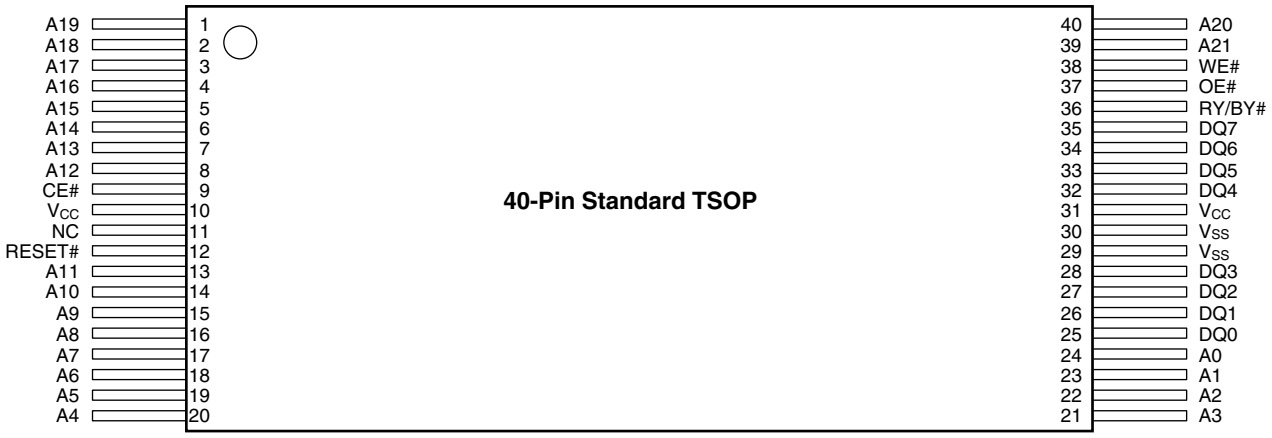


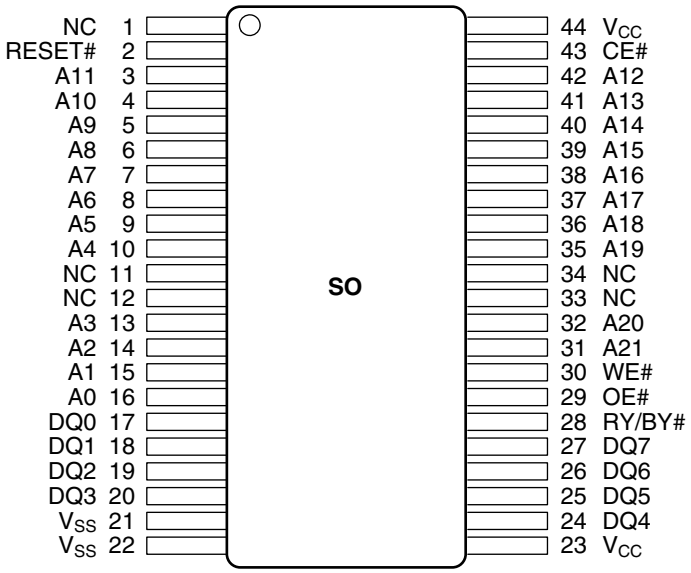




Downloaded from Elcodis.com electronic components distributor

## PIN CONFIGURATION

| | | |
|---|---|---|
| A0–A21 | = | 22 Addresses |
| DQ0–DQ7 | = | 8 Data Inputs/Outputs |
| CE# | = | Chip Enable |
| WE# | = | Write Enable |
| OE# | = | Output Enable |
| RESET# | = | Hardware Reset Pin, Active Low |
| RY/BY# | = | Ready/Busy Output |
| $V_{CC}$ | = | +5.0 V single power supply (see Product Selector Guide for device speed ratings and voltage supply tolerances) |
| $V_{SS}$ | = | Device Ground |
| NC | = | Pin Not Connected Internally |

## LOGIC SYMBOL

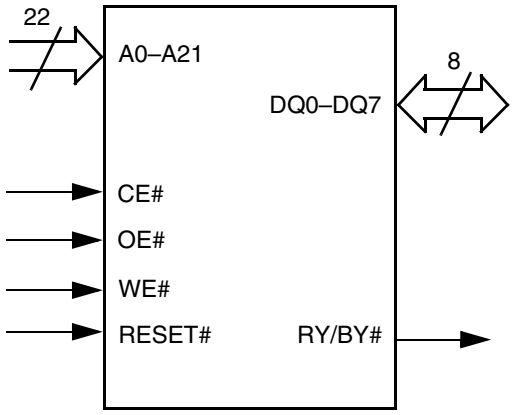




Downloaded from Elcodis.com electronic components distributor

# ORDERING INFORMATION

## Standard Products

AMD standard products are available in several packages and operating ranges. The order number (Valid Combination) is formed by a combination of the following:

**Am29F032B -75 E F**

**TEMPERATURE RANGE**

I = Industrial (–40° C to +85° C)
E = Extended (–55° C to +125° C)
F = Industrial (–40° C to +85° C) with Pb-free Package
K = Extended (–55° C to +125° C) with Pb-free Package

**PACKAGE TYPE**

E = 40-Pin Thin Small Outline Package (TSOP) Standard Pinout (TS 040)
S = 44-Pin Small Outline Package (SO 044)

**SPEED OPTION**

See Product Selector Guide and Valid Combinations

**DEVICE NUMBER/DESCRIPTION**

Am29F032B
32 Megabit (4 M x 8-Bit) CMOS 5.0 Volt-only Sector Erase Flash Memory
5.0 V Read, Program, and Erase

| Valid Combinations | |
|---|---|
| AM29F032B-75 | EI, EF,<br>SI, SF |
| AM29F032B-90 | EI, EE, EF, EK<br>SI, SE, SF, SK |

**Valid Combinations**

Valid Combinations list configurations planned to be supported in volume for this device. Consult the local AMD sales office to confirm availability of specific valid combinations and to check on newly released combinations.



Downloaded from Elcodis.com electronic components distributor

## DEVICE BUS OPERATIONS

This section describes the requirements and use of the device bus operations, which are initiated through the internal command register. The command register itself does not occupy any addressable memory location. The register is composed of latches that store the commands, along with the address and data information needed to execute the command. The contents of the register serve as inputs to the internal state machine. The state machine outputs dictate the function of the device. The appropriate device bus operations table lists the inputs and control levels required, and the resulting output. The following subsections describe each of these operations in further detail.

**Table 1. Am29F032B Device Bus Operations**

| Operation | CE# | OE# | WE# | RESET# | A0–A21 | DQ0–DQ7 |
|---|---|---|---|---|---|---|
| Read | L | L | H | H | $A_{IN}$ | $D_{OUT}$ |
| Write | L | H | L | H | $A_{IN}$ | $D_{IN}$ |
| CMOS Standby | $V_{CC} \pm 0.5$ V | X | X | $V_{CC} \pm 0.5$ V | X | High-Z |
| TTL Standby | H | X | X | H | X | High-Z |
| Output Disable | L | H | H | H | X | High-Z |
| Hardware Reset | X | X | X | L | X | High-Z |
| Temporary Sector Unprotect (See Note) | X | X | X | $V_{ID}$ | $A_{IN}$ | $D_{IN}$ |

***Legend:***
*L = Logic Low = $V_{IL}$, H = Logic High = $V_{IH}$, $V_{ID}$ = 12.0 ± 0.5 V, X = Don't Care, $D_{IN}$ = Data In, $D_{OUT}$ = Data Out, $A_{IN}$ = Address In*

***Note:*** *See the sections Sector Group Protection and Temporary Sector Unprotect for more information.*

### Requirements for Reading Array Data

To read array data from the outputs, the system must drive the CE# and OE# pins to $V_{IL}$. CE# is the power control and selects the device. OE# is the output control and gates array data to the output pins. WE# should remain at $V_{IH}$.

The internal state machine is set for reading array data upon device power-up, or after a hardware reset. This ensures that no spurious alteration of the memory content occurs during the power transition. No command is necessary in this mode to obtain array data. Standard microprocessor read cycles that assert valid addresses on the device address inputs produce valid data on the device data outputs. The device remains enabled for read access until the command register contents are altered.

See "Reading Array Data" on page 13 for more information. Refer to the AC Read Operations table for timing specifications and to Figure 9, on page 25 for the timing waveforms. $I_{CC1}$ in the DC Characteristics table represents the active current specification for reading array data.

### Writing Commands/Command Sequences

To write a command or command sequence (which includes programming data to the device and erasing sectors of memory), the system must drive WE# and CE# to $V_{IL}$, and OE# to $V_{IH}$.

An erase operation can erase one sector, multiple sectors, or the entire device. The Sector Address Tables indicate the address space that each sector occupies. A "sector address" consists of the address bits required to uniquely select a sector. See the "Writing specific address and data commands or sequences into the command register initiates device operations. The Command Definitions table defines the valid register command sequences. Writing incorrect address and data values or writing them in the improper sequence resets the device to reading array data." section for details on erasing a sector or the entire chip, or suspending/resuming the erase operation.

After the system writes the autoselect command sequence, the device enters the autoselect mode. The system can then read autoselect codes from the internal register (which is separate from the memory array) on DQ7–DQ0. Standard read cycle timings apply in this mode. Refer to the "Autoselect Mode" on page 11 and "Autoselect Command Sequence" on page 14 sections for more information.

$I_{CC2}$ in the "DC Characteristics" on page 23 table represents the active current specification for the write mode. The ""AC Characteristics" on page 25 section



Downloaded from Elcodis.com electronic components distributor

contains timing specification tables and timing diagrams for write operations.

## Program and Erase Operation Status

During an erase or program operation, the system may check the status of the operation by reading the status bits on DQ7–DQ0. Standard read cycle timings and $I_{CC}$ read specifications apply. The Erase Resume command is valid only during the Erase Suspend mode.Refer to "Erase Suspend/Erase Resume Commands" on page 15 for more information, and to each "AC Characteristics" on page 25 section for timing diagrams.

## Standby Mode

When the system is not reading or writing to the device, it can place the device in the standby mode. In this mode, current consumption is greatly reduced, and the outputs are placed in the high impedance state, independent of the OE# input.

The device enters the CMOS standby mode when CE# and RESET# pins are both held at $V_{CC}$ ± 0.5 V. (Note that this is a more restricted voltage range than $V_{IH}$.) The device enters the TTL standby mode when CE# and RESET# pins are both held at $V_{IH}$. The device requires standard access time ($t_{CE}$) for read access when the device is in either of these standby modes, before it is ready to read data.

The device also enters the standby mode when the RESET# pin is driven low. Refer to the next section, "RESET#: Hardware Reset Pin".

If the device is deselected during erasure or programming, the device draws active current until the operation is completed.

$I_{CC3}$ in DC Characteristics tables, represents the standby current specification.

## RESET#: Hardware Reset Pin

The RESET# pin provides a hardware method of resetting the device to reading array data. When the system drives the RESET# pin low for at least a period of $t_{RP}$, the device **immediately terminates** any operation in progress, tristates all data output pins, and ignores all read/write attempts for the duration of the RESET# pulse. The device also resets the internal state machine to reading array data. The operation that was interrupted should be reinitiated once the device is ready to accept another command sequence, to ensure data integrity.

Current is reduced for the duration of the RESET# pulse. When RESET# is held at $V_{IL}$, the device enters the TTL standby mode; if RESET# is held at $V_{SS}$ ± 0.5 V, the device enters the CMOS standby mode.

The RESET# pin may be tied to the system reset circuitry. A system reset would thus also reset the Flash memory, enabling the system to read the boot-up firmware from the Flash memory.

If RESET# is asserted during a program or erase operation, the RY/BY# pin remains a "0" (busy) until the internal reset operation is complete, which requires a time of $t_{READY}$ (during Embedded Algorithms). The system can thus monitor RY/BY# to determine whether the reset operation is complete. If RESET# is asserted when a program or erase operation is not executing (RY/BY# pin is "1"), the reset operation is completed within a time of $t_{READY}$ (not during Embedded Algorithms). The system can read data $t_{RH}$ after the RESET# pin returns to $V_{IH}$.

Refer to the "AC Characteristics" on page 25 tables for RESET# parameters and timing diagram.

## Output Disable Mode

When the OE# input is at $V_{IH}$, output from the device is disabled. The output pins are placed in the high impedance state.



Downloaded from Elcodis.com electronic components distributor

**Table 2. Am29F032B Sector Address Table (Sheet 1 of 2)**

| Sector | A21 | A20 | A19 | A18 | A17 | A16 | Sector Size | Address Range |
|---|---|---|---|---|---|---|---|---|
| SA0 | 0 | 0 | 0 | 0 | 0 | 0 | 64K | 000000h–00FFFFh |
| SA1 | 0 | 0 | 0 | 0 | 0 | 1 | 64K | 010000h–01FFFFh |
| SA2 | 0 | 0 | 0 | 0 | 1 | 0 | 64K | 020000h–02FFFFh |
| SA3 | 0 | 0 | 0 | 0 | 1 | 1 | 64K | 030000h–03FFFFh |
| SA4 | 0 | 0 | 0 | 1 | 0 | 0 | 64K | 040000h–04FFFFh |
| SA5 | 0 | 0 | 0 | 1 | 0 | 1 | 64K | 050000h–05FFFFh |
| SA6 | 0 | 0 | 0 | 1 | 1 | 0 | 64K | 060000h–06FFFFh |
| SA7 | 0 | 0 | 0 | 1 | 1 | 1 | 64K | 070000h–07FFFFh |
| SA8 | 0 | 0 | 1 | 0 | 0 | 0 | 64K | 080000h–08FFFFh |
| SA9 | 0 | 0 | 1 | 0 | 0 | 1 | 64K | 090000h–09FFFFh |
| SA10 | 0 | 0 | 1 | 0 | 1 | 0 | 64K | 0A0000h–0AFFFFh |
| SA11 | 0 | 0 | 1 | 0 | 1 | 1 | 64K | 0B0000h–0BFFFFh |
| SA12 | 0 | 0 | 1 | 1 | 0 | 0 | 64K | 0C0000h–0CFFFFh |
| SA13 | 0 | 0 | 1 | 1 | 0 | 1 | 64K | 0D0000h–0DFFFFh |
| SA14 | 0 | 0 | 1 | 1 | 1 | 0 | 64K | 0E0000h–0EFFFFh |
| SA15 | 0 | 0 | 1 | 1 | 1 | 1 | 64K | 0F0000h–0FFFFFh |
| SA16 | 0 | 1 | 0 | 0 | 0 | 0 | 64K | 100000h–10FFFFh |
| SA17 | 0 | 1 | 0 | 0 | 0 | 1 | 64K | 110000h–11FFFFh |
| SA18 | 0 | 1 | 0 | 0 | 1 | 0 | 64K | 120000h–12FFFFh |
| SA19 | 0 | 1 | 0 | 0 | 1 | 1 | 64K | 130000h–13FFFFh |
| SA20 | 0 | 1 | 0 | 1 | 0 | 0 | 64K | 140000h–14FFFFh |
| SA21 | 0 | 1 | 0 | 1 | 0 | 1 | 64K | 150000h–15FFFFh |
| SA22 | 0 | 1 | 0 | 1 | 1 | 0 | 64K | 160000h–16FFFFh |
| SA23 | 0 | 1 | 0 | 1 | 1 | 1 | 64K | 170000h–17FFFFh |
| SA24 | 0 | 1 | 1 | 0 | 0 | 0 | 64K | 180000h–18FFFFh |
| SA25 | 0 | 1 | 1 | 0 | 0 | 1 | 64K | 190000h–19FFFFh |
| SA26 | 0 | 1 | 1 | 0 | 1 | 0 | 64K | 1A0000h–1AFFFFh |
| SA27 | 0 | 1 | 1 | 0 | 1 | 1 | 64K | 1B0000h–1BFFFFh |
| SA28 | 0 | 1 | 1 | 1 | 0 | 0 | 64K | 1C0000h–1CFFFFh |
| SA29 | 0 | 1 | 1 | 1 | 0 | 1 | 64K | 1D0000h–1DFFFFh |
| SA30 | 0 | 1 | 1 | 1 | 1 | 0 | 64K | 1E0000h–1EFFFFh |
| SA31 | 0 | 1 | 1 | 1 | 1 | 1 | 64K | 1F0000h–1FFFFFh |
| SA32 | 1 | 0 | 0 | 0 | 0 | 0 | 64K | 200000h–20FFFFh |
| SA33 | 1 | 0 | 0 | 0 | 0 | 1 | 64K | 210000h–21FFFFh |
| SA34 | 1 | 0 | 0 | 0 | 1 | 0 | 64K | 220000h–22FFFFh |
| SA35 | 1 | 0 | 0 | 0 | 1 | 1 | 64K | 230000h–23FFFFh |
| SA36 | 1 | 0 | 0 | 1 | 0 | 0 | 64K | 240000h–24FFFFh |
| SA37 | 1 | 0 | 0 | 1 | 0 | 1 | 64K | 250000h–25FFFFh |
| SA38 | 1 | 0 | 0 | 1 | 1 | 0 | 64K | 260000h–26FFFFh |
| SA39 | 1 | 0 | 0 | 1 | 1 | 1 | 64K | 270000h–27FFFFh |
| SA40 | 1 | 0 | 1 | 0 | 0 | 0 | 64K | 280000h–28FFFFh |
| SA41 | 1 | 0 | 1 | 0 | 0 | 1 | 64K | 290000h–29FFFFh |
| SA42 | 1 | 0 | 1 | 0 | 1 | 0 | 64K | 2A0000h–2AFFFFh |
| SA43 | 1 | 0 | 1 | 0 | 1 | 1 | 64K | 2B0000h–2BFFFFh |



Downloaded from Elcodis.com electronic components distributor

**Table 2. Am29F032B Sector Address Table (Sheet 2 of 2)**

| Sector | A21 | A20 | A19 | A18 | A17 | A16 | Sector Size | Address Range |
|---|---|---|---|---|---|---|---|---|
| SA44 | 1 | 0 | 1 | 1 | 0 | 0 | 64K | 2C0000h–2CFFFFh |
| SA45 | 1 | 0 | 1 | 1 | 0 | 1 | 64K | 2D0000h–2DFFFFh |
| SA46 | 1 | 0 | 1 | 1 | 1 | 0 | 64K | 2E0000h–2EFFFFh |
| SA47 | 1 | 0 | 1 | 1 | 1 | 1 | 64K | 2F0000h–2FFFFFh |
| SA48 | 1 | 1 | 0 | 0 | 0 | 0 | 64K | 300000h–30FFFFh |
| SA49 | 1 | 1 | 0 | 0 | 0 | 1 | 64K | 310000h–31FFFFh |
| SA50 | 1 | 1 | 0 | 0 | 1 | 0 | 64K | 320000h–32FFFFh |
| SA51 | 1 | 1 | 0 | 0 | 1 | 1 | 64K | 330000h–33FFFFh |
| SA52 | 1 | 1 | 0 | 1 | 0 | 0 | 64K | 340000h–34FFFFh |
| SA53 | 1 | 1 | 0 | 1 | 0 | 1 | 64K | 350000h–35FFFFh |
| SA54 | 1 | 1 | 0 | 1 | 1 | 0 | 64K | 360000h–36FFFFh |
| SA55 | 1 | 1 | 0 | 1 | 1 | 1 | 64K | 370000h–37FFFFh |
| SA56 | 1 | 1 | 1 | 0 | 0 | 0 | 64K | 380000h–38FFFFh |
| SA57 | 1 | 1 | 1 | 0 | 0 | 1 | 64K | 390000h–39FFFFh |
| SA58 | 1 | 1 | 1 | 0 | 1 | 0 | 64K | 3A0000h–3AFFFFh |
| SA59 | 1 | 1 | 1 | 0 | 1 | 1 | 64K | 3B0000h–3BFFFFh |
| SA60 | 1 | 1 | 1 | 1 | 0 | 0 | 64K | 3C0000h–3CFFFFh |
| SA61 | 1 | 1 | 1 | 1 | 0 | 1 | 64K | 3D0000h–3DFFFFh |
| SA62 | 1 | 1 | 1 | 1 | 1 | 0 | 64K | 3E0000h–3EFFFFh |
| SA63 | 1 | 1 | 1 | 1 | 1 | 1 | 64K | 3F0000h–3FFFFFh |

***Note:*** *All sectors are 64 Kbytes in size.*

## Autoselect Mode

The autoselect mode provides manufacturer and device identification, and sector group protection verification, through identifier codes output on DQ7–DQ0. This mode is primarily intended for programming equipment to automatically match a device to be programmed with its corresponding programming algorithm. However, the autoselect codes can also be accessed in-system through the command register.

When using programming equipment, the autoselect mode requires $V_{ID}$ (11.5 V to 12.5 V) on address pin A9. Address pins A6, A1, and A0 must be as shown in Table 3. In addition, when verifying sector group protection, the sector group address must appear on the appropriate highest order address bits (see Table 4 on page 12). Table 3 also shows the remaining address bits that are don't care. When all necessary bits have been set as required, the programming equipment may then read the corresponding identifier code on DQ7-DQ0.

To access the autoselect codes in-system, the host system can issue the autoselect command via the command register, as shown in Table 5 on page 17. This method does not require $V_{ID}$ on an address line. Refer to the Autoselect Command Sequence section for more information.

**Table 3. Am29F032B Autoselect Codes**

| Description | A21-A18 | A17-A10 | A9 | A8-A7 | A6 | A5-A2 | A1 | A0 | Identifier Code on DQ7-DQ0 |
|---|---|---|---|---|---|---|---|---|---|
| Manufacturer ID: AMD | X | X | $V_{ID}$ | X | $V_{IL}$ | X | $V_{IL}$ | $V_{IL}$ | 01h |
| Device ID: Am29F032B | X | X | $V_{ID}$ | X | $V_{IL}$ | X | $V_{IL}$ | $V_{IH}$ | 41h |
| Sector Group Protection Verification | Sector Group Address | X | $V_{ID}$ | X | $V_{IL}$ | X | $V_{IH}$ | $V_{IL}$ | 01h (protected) |
| | | | | | | | | | 00h (unprotected) |

***Note:*** *Identifier codes for manufacturer and device IDs exhibit odd parity with DQ7 defined as the parity bit.*



Downloaded from Elcodis.com electronic components distributor

## Sector Group Protection/Unprotection

The hardware sector group protection feature disables both program and erase operations in any sector group. Each sector group consists of four adjacent sectors. Table 4 shows how the sectors are grouped, and the address range that each sector group contains. The hardware sector group unprotection feature re-enables both program and erase operations in previously protected sector groups.

Sector group protection/unprotection must be implemented using programming equipment. The procedure requires a high voltage ($V_{ID}$) on address pin A9 and the control pins. Details on this method are provided in a supplement, publication number 22184. Contact an AMD representative to obtain a copy of the appropriate document.

The device is shipped with all sector groups unprotected. AMD offers the option of programming and protecting sector groups at its factory prior to shipping the device through AMD's ExpressFlash™ Service. Contact an AMD representative for details.

It is possible to determine whether a sector group is protected or unprotected. See "Autoselect Mode" on page 11 for details.

**Table 4. Sector Group Addresses**

| Sector Group | A21 | A20 | A19 | A18 | Sectors |
|---|---|---|---|---|---|
| SGA0 | 0 | 0 | 0 | 0 | SA0–SA3 |
| SGA1 | 0 | 0 | 0 | 1 | SA4–SA7 |
| SGA2 | 0 | 0 | 1 | 0 | SA8–SA11 |
| SGA3 | 0 | 0 | 1 | 1 | SA12–SA15 |
| SGA4 | 0 | 1 | 0 | 0 | SA16–SA19 |
| SGA5 | 0 | 1 | 0 | 1 | SA20–SA23 |
| SGA6 | 0 | 1 | 1 | 0 | SA24–SA27 |
| SGA7 | 0 | 1 | 1 | 1 | SA28–SA31 |
| SGA8 | 1 | 0 | 0 | 0 | SA32–SA35 |
| SGA9 | 1 | 0 | 0 | 1 | SA36–SA39 |
| SGA10 | 1 | 0 | 1 | 0 | SA40–SA43 |
| SGA11 | 1 | 0 | 1 | 1 | SA44–SA47 |
| SGA12 | 1 | 1 | 0 | 0 | SA48–SA51 |
| SGA13 | 1 | 1 | 0 | 1 | SA52–SA55 |
| SGA14 | 1 | 1 | 1 | 0 | SA56–SA59 |
| SGA15 | 1 | 1 | 1 | 1 | SA60–SA63 |

## Temporary Sector Group Unprotect

This feature allows temporary unprotection of previously protected sector groups to change data in-system. The Sector Group Unprotect mode is activated by setting the RESET# pin to $V_{ID}$ (11.5 V – 12.5 V). During this mode, formerly protected sector groups can be programmed or erased by selecting the sector group addresses. Once $V_{ID}$ is removed from the RESET# pin, all the previously protected sector groups are protected again. Figure 1 shows the algorithm, and Figure 16 shows the timing diagrams, for this feature.

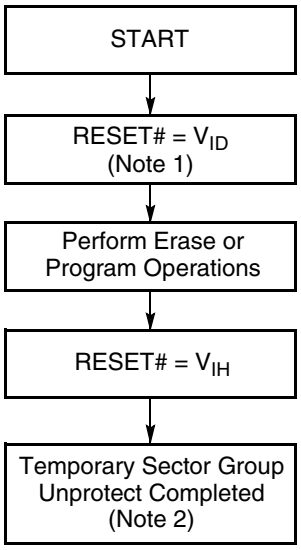


***Notes:***

1. *All protected sector groups unprotected.*
2. *All previously protected sector groups are protected once again.*

**Figure 1. Temporary Sector Group Unprotect Operation**



Downloaded from Elcodis.com electronic components distributor

## Hardware Data Protection

The command sequence requirement of unlock cycles for programming or erasing provides data protection. In addition, the following hardware data protection measures prevent accidental erasure or programming, which might otherwise be caused by spurious system level signals during $V_{CC}$ power-up and power-down transitions, or from system noise.

### Low $V_{CC}$ Write Inhibit

When $V_{CC}$ is less than $V_{LKO}$ (see DC Characteristics for voltage levels), the device does not accept any write cycles. This protects data during $V_{CC}$ power-up and power-down. The command register and all internal program/erase circuits are disabled. Under this condition the device resets to the read mode. Subsequent writes are ignored until the $V_{CC}$ level is greater than $V_{LKO}$. The system must ensure that the control pins are logically correct to prevent unintentional writes when $V_{CC}$ is above $V_{LKO}$.

### Write Pulse "Glitch" Protection

Noise pulses of less than 5 ns (typical) on OE#, CE# or WE# do not initiate a write cycle.

### Logical Inhibit

Write cycles are inhibited by holding any one of OE# = $V_{IL}$, CE# = $V_{IH}$ or WE# = $V_{IH}$. To initiate a write cycle, CE# and WE# must be at $V_{IL}$ while OE# is at $V_{IH}$.

### Power-Up Write Inhibit

If WE# = CE# = $V_{IL}$ and OE# = $V_{IH}$ during power up, the device does not accept commands on the rising edge of WE#. The internal state machine is automatically reset to the read mode on power-up.

## COMMAND DEFINITIONS

Writing specific address and data commands or sequences into the command register initiates device operations. The Command Definitions table defines the valid register command sequences. Writing **incorrect address and data values** or writing them in the **improper sequence** resets the device to reading array data.

All addresses are latched on the falling edge of WE# or CE#, whichever happens later. All data is latched on the rising edge of WE# or CE#, whichever happens first. Refer to the appropriate timing diagrams in "AC Characteristics" on page 25.

## Reading Array Data

The device is automatically set to reading array data after device power-up. No commands are required to retrieve data. The device is also ready to read array data after completing an Embedded Program or Embedded Erase algorithm.

After the device accepts an Erase Suspend command, the device enters the Erase Suspend mode. The system can read array data using the standard read timings, except that if it reads at an address within erase-suspended sectors, the device outputs status data. After completing a programming operation in the Erase Suspend mode, the system may once again read array data with the same exception. See "Erase Suspend/Erase Resume Commands" on page 15 for more information on this mode.

The system *must* issue the reset command to re-enable the device for reading array data if DQ5 goes high, or while in the autoselect mode. See "Reset Command", next.

See also "Requirements for Reading Array Data" in the "Device Bus Operations" section for more information. The Read Operations table provides the read parameters, and Read Operation Timings diagram shows the timing diagram.

## Reset Command

Writing the reset command to the device resets the device to reading array data. Address bits are don't care for this command.

The reset command may be written between the sequence cycles in an erase command sequence before erasing begins. This resets the device to reading array data. Once erasure begins, however, the device ignores reset commands until the operation is complete.

The reset command may be written between the sequence cycles in a program command sequence before programming begins. This resets the device to reading array data (also applies to programming in Erase Suspend mode). Once programming begins, however, the device ignores reset commands until the operation is complete.

The reset command may be written between the sequence cycles in an autoselect command sequence. Once in the autoselect mode, the reset command *must* be written to return to reading array data (also applies to autoselect during Erase Suspend).

If DQ5 goes high during a program or erase operation, writing the reset command returns the device to reading array data (also applies during Erase Suspend).



Downloaded from Elcodis.com electronic components distributor

## Autoselect Command Sequence

The autoselect command sequence allows the host system to access the manufacturer and devices codes, and determine whether or not a sector is protected. The Command Definitions table shows the address and data requirements. This method is an alternative to that shown in the Autoselect Codes (High Voltage Method) table, which is intended for PROM programmers and requires $V_{ID}$ on address bit A9.

The autoselect command sequence is initiated by writing two unlock cycles, followed by the autoselect command. The device then enters the autoselect mode, and the system may read at any address any number of times, without initiating another command sequence.

A read cycle at address XX00h retrieves the manufacturer code. A read cycle at address XX01h returns the device code. A read cycle containing a sector address (SA) and the address 02h in returns 01h if that sector is protected, or 00h if it is unprotected. Refer to Table 2 on page 10 for valid sector addresses.

The system must write the reset command to exit the autoselect mode and return to reading array data.

## Byte Program Command Sequence

Programming is a four-bus-cycle operation. The program command sequence is initiated by writing two unlock write cycles, followed by the program set-up command. The program address and data are written next, which in turn initiate the Embedded Program algorithm. The system is *not* required to provide further controls or timings. The device automatically provides internally generated program pulses and verify the programmed cell margin. Table 5 on page 17 shows the address and data requirements for the byte program command sequence.

When the Embedded Program algorithm is complete, the device then returns to reading array data and addresses are no longer latched. The system can determine the status of the program operation by using DQ7, DQ6, or RY/BY#. See Table 6 on page 21 for information on these status bits.

Any commands written to the device during the Embedded Program Algorithm are ignored. Note that a **hardware reset** immediately terminates the programming operation. The program command sequence should be reinitiated once the device has reset to reading array data, to ensure data integrity.

Programming is allowed in any sequence and across sector boundaries. **A bit cannot be programmed from a “0” back to a “1”.** Attempting to do so may halt the operation and set DQ5 to “1”, or cause the Data# Polling algorithm to indicate the operation was successful. However, a succeeding read will show that the data is still “0”. Only erase operations can convert a “0” to a “1”.

## Chip Erase Command Sequence

Chip erase is a six-bus-cycle operation. The chip erase command sequence is initiated by writing two unlock cycles, followed by a set-up command. Two additional unlock write cycles are then followed by the chip erase command, which in turn invokes the Embedded Erase algorithm. The device does *not* require the system to preprogram prior to erase. The Embedded Erase algorithm automatically preprograms and verifies the entire memory for an all zero data pattern prior to electrical erase. The system is not required to provide any controls or timings during these operations. Table 5 on page 17 shows the address and data requirements for the chip erase command sequence.

Any commands written to the chip during the Embedded Erase algorithm are ignored. Note that a **hardware reset** during the chip erase operation immediately terminates the operation. The Chip Erase command sequence should be reinitiated once the device has returned to reading array data, to ensure data integrity.

The system can determine the status of the erase operation by using DQ7, DQ6, DQ2, or RY/BY#. The Erase Resume command is valid only during the Erase Suspend mode. See “Erase Suspend/Erase Resume Commands” on page 15 for information on these status bits. When the Embedded Erase algorithm is complete, the device returns to reading array data and addresses are no longer latched.

Figure 3, on page 16 illustrates the algorithm for the erase operation. See Figure 3, on page 16 for parameters, and to the Figure 12, on page 29 for timing waveforms.



Downloaded from Elcodis.com electronic components distributor

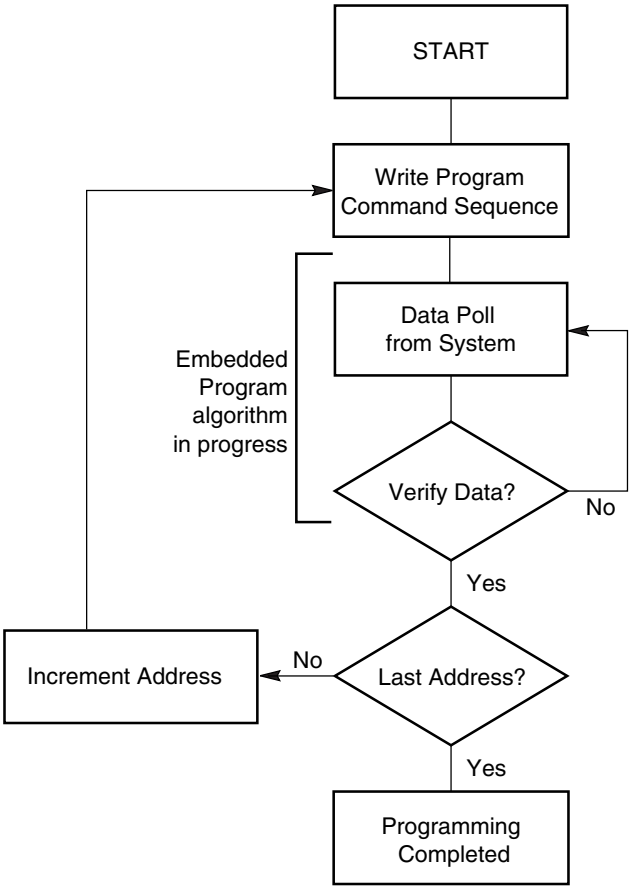


***Note:*** *See Table 5 for program command sequence.*

**Figure 2. Program Operation**

## Sector Erase Command Sequence

Sector erase is a six bus cycle operation. The sector erase command sequence is initiated by writing two unlock cycles, followed by a set-up command. Two additional unlock write cycles are then followed by the address of the sector to be erased, and the sector erase command. Table 5 on page 17 shows the address and data requirements for the sector erase command sequence.

The device does *not* require the system to preprogram the memory prior to erase. The Embedded Erase algorithm automatically programs and verifies the sector for an all zero data pattern prior to electrical erase. The system is not required to provide any controls or timings during these operations.

After the command sequence is written, a sector erase time-out of 50 µs begins. During the time-out period, additional sector addresses and sector erase commands may be written. Loading the sector erase buffer may be done in any sequence, and the number of sectors may be from one sector to all sectors. The time between these additional cycles must be less than 50 µs, otherwise the last address and command might not be accepted, and erasure may begin. It is recommended that processor interrupts be disabled during this time to ensure all commands are accepted. The interrupts can be re-enabled after the last Sector Erase command is written. If the time between additional sector erase commands can be assumed to be less than 50 µs, the system need not monitor DQ3. **Any command other than Sector Erase or Erase Suspend during the time-out period resets the device to reading array data.** The system must rewrite the command sequence and any additional sector addresses and commands.

The system can monitor DQ3 to determine if the sector erase timer has timed out. (See "DQ3: Sector Erase Timer" on page 20.) The time-out begins from the rising edge of the final WE# pulse in the command sequence.

Once the sector erase operation has begun, only the Erase Suspend command is valid. All other commands are ignored. Note that a **hardware reset** during the sector erase operation immediately terminates the operation. The Sector Erase command sequence should be reinitiated once the device has returned to reading array data, to ensure data integrity.

When the Embedded Erase algorithm is complete, the device returns to reading array data and addresses are no longer latched. The system can determine the status of the erase operation by using DQ7, DQ6, DQ2, or RY/BY#. The Erase Resume command is valid only during the Erase Suspend mode. See "Erase Suspend/Erase Resume Commands" on page 15for information on these status bits.

Figure 3, on page 16 illustrates the algorithm for the erase operation. See Figure 3, on page 16 for parameters, and to the Figure 12, on page 29 for timing waveforms.

## Erase Suspend/Erase Resume Commands

The Erase Suspend command allows the system to interrupt a sector erase operation and then read data from, or program data to, any sector not selected for erasure. This command is valid only during the sector erase operation, including the 50 µs time-out period during the sector erase command sequence. The Erase Suspend command is ignored if written during the chip erase operation or Embedded Program algorithm. Writing the Erase Suspend command during the Sector Erase time-out immediately terminates the time-out period and suspends the erase operation. Addresses are "don't-cares" when writing the Erase Suspend command.

When the Erase Suspend command is written during a sector erase operation, the device requires a maximum of 20 µs to suspend the erase operation. However, when the Erase Suspend command is written during the sector erase time-out, the device immediately ter-



Downloaded from Elcodis.com electronic components distributor

minates the time-out period and suspends the erase operation.

After the erase operation has been suspended, the system can read array data from or program data to any sector not selected for erasure. (The device "erase suspends" all sectors selected for erasure.) Normal read and write timings and command definitions apply. Reading at any address within erase-suspended sectors produces status data on DQ7–DQ0. The system can use DQ7, or DQ6 and DQ2 together, to determine if a sector is actively erasing or is erase-suspended. The Erase Resume command is valid only during the Erase Suspend mode. See "Erase Suspend/Erase Resume Commands" on page 15 for information on these status bits.

After an erase-suspended program operation is complete, the system can once again read array data within non-suspended sectors. The system can determine the status of the program operation using the DQ7 or DQ6 status bits, just as in the standard program operation. See "Erase Suspend/Erase Resume Commands" on page 15 for more information.

The system may also write the autoselect command sequence when the device is in the Erase Suspend mode. The device allows reading autoselect codes even at addresses within erasing sectors, since the codes are not stored in the memory array. When the device exits the autoselect mode, the device reverts to the Erase Suspend mode, and is ready for another valid operation. See "Autoselect Command Sequence" on page 14 for more information.

The system must write the Erase Resume command (address bits are "don't care") to exit the erase suspend mode and continue the sector erase operation. Further writes of the Resume command are ignored. Another Erase Suspend command can be written after the device has resumed erasing.

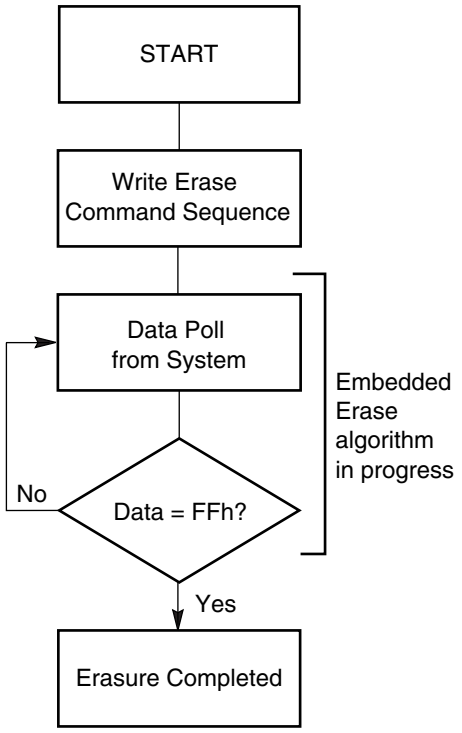


***Notes:***

1. *See the appropriate Command Definitions table for erase command sequence.*
2. *See "DQ3: Sector Erase Timer" for more information.*

**Figure 3. Erase Operation**



Downloaded from Elcodis.com electronic components distributor

## Command Definitions

**Table 5. Am29F032B Command Definitions**

| Command Sequence (Note 1) | | Cycles | Bus Cycles (Notes 2–4) | | | | | | | | | | | |
|---|---|---|---|---|---|---|---|---|---|---|---|---|---|---|
| | | | First | | Second | | Third | | Fourth | | Fifth | | Sixth | |
| | | | Addr | Data | Addr | Data | Addr | Data | Addr | Data | Addr | Data | Addr | Data |
| Read (Note 5) | | 1 | RA | RD | | | | | | | | | | |
| Reset (Note 6) | | 1 | XXX | F0 | | | | | | | | | | |
| Autoselect (Note 7) | Manufacturer ID | 4 | 555 | AA | 2AA | 55 | 555 | 90 | X00 | 01 | | | | |
| | Device ID | 4 | 555 | AA | 2AA | 55 | 555 | 90 | X01 | 41 | | | | |
| | Sector Group Protect Verify (Note 8) | 4 | 555 | AA | 2AA | 55 | 555 | 90 | SGA X02 | XX00 | | | | |
| | | | | | | | | | | XX01 | | | | |
| Program | | 4 | 555 | AA | 2AA | 55 | 555 | A0 | PA | PD | | | | |
| Chip Erase | | 6 | 555 | AA | 2AA | 55 | 555 | 80 | 555 | AA | 2AA | 55 | 555 | 10 |
| Sector Erase | | 6 | 555 | AA | 2AA | 55 | 555 | 80 | 555 | AA | 2AA | 55 | SA | 30 |
| Erase Suspend (Note 9) | | 1 | XXX | B0 | | | | | | | | | | |
| Erase Resume (Note 10) | | 1 | XXX | 30 | | | | | | | | | | |

***Legend:***

*X = Don't care*

*RA = Address of the memory location to be read.*

*RD = Data read from location RA during read operation.*

*PA = Address of the memory location to be programmed. Addresses latch on the falling edge of the WE# or CE# pulse, whichever happens later.*

*PD = Data to be programmed at location PA. Data latches on the rising edge of WE# or CE# pulse, whichever happens first.*

*SA = Address of the sector to be verified (in autoselect mode) or erased. Address bits A21–A16 select a unique sector.*

*SGA = Address of the sector group to be verified. Address bits A21–A18 select a unique sector group.*

***Notes:***

1. *See Table 1 on page 8 for description of bus operations.*
2. *All values are in hexadecimal.*
3. *Except when reading array or autoselect data, all bus cycles are write operations.*
4. *Address bits A21–A11 are don't cares for unlock and command cycles, unless SA or PA required.*
5. *No unlock or command cycles required when reading array data.*
6. *The Reset command is required to return to reading array data when device is in the autoselect mode, or if DQ5 goes high (while the device is providing status data).*
7. *The fourth cycle of the autoselect command sequence is a read cycle.*
8. *The data is 00h for an unprotected sector group and 01h for a protected sector group.See "Autoselect Command Sequence" for more information.*
9. *The system may read and program in non-erasing sectors, or enter the autoselect mode, when in the Erase Suspend mode. The Erase Suspend command is valid only during a sector erase operation.*
10. *The Erase Resume command is valid only during the Erase Suspend mode.*



Downloaded from Elcodis.com electronic components distributor

## WRITE OPERATION STATUS

The device provides several bits to determine the status of a write operation: DQ2, DQ3, DQ5, DQ6, DQ7, and RY/BY#. Table 6 on page 21 and the following subsections describe the functions of these bits. DQ7, RY/BY#, and DQ6 each offer a method for determining whether a program or erase operation is complete or in progress. These three bits are discussed first.

### DQ7: Data# Polling

The Data# Polling bit, DQ7, indicates to the host system whether an Embedded Algorithm is in progress or completed, or whether the device is in Erase Suspend. Data# Polling is valid after the rising edge of the final WE# pulse in the program or erase command sequence.

During the Embedded Program algorithm, the device outputs on DQ7 the complement of the datum programmed to DQ7. This DQ7 status also applies to programming during Erase Suspend. When the Embedded Program algorithm is complete, the device outputs the datum programmed to DQ7. The system must provide the program address to read valid status information on DQ7. If a program address falls within a protected sector, Data# Polling on DQ7 is active for approximately 2 µs, then the device returns to reading array data.

During the Embedded Erase algorithm, Data# Polling produces a “0” on DQ7. When the Embedded Erase algorithm is complete, or if the device enters the Erase Suspend mode, Data# Polling produces a “1” on DQ7. This is analogous to the complement/true datum output described for the Embedded Program algorithm: the erase function changes all the bits in a sector to “1”; prior to this, the device outputs the “complement,” or “0.” The system must provide an address within any of the sectors selected for erasure to read valid status information on DQ7.

After an erase command sequence is written, if all sectors selected for erasing are protected, Data# Polling on DQ7 is active for approximately 100 µs, then the device returns to reading array data. If not all selected sectors are protected, the Embedded Erase algorithm erases the unprotected sectors, and ignores the selected sectors that are protected.

When the system detects DQ7 has changed from the complement to true data, it can read valid data at DQ7–DQ0 on the *following* read cycles. This is because DQ7 may change asynchronously with DQ0–DQ6 while Output Enable (OE#) is asserted low. The Data# Polling Timings (During Embedded Algorithms) figure in the “AC Characteristics” section illustrates this.

Table 6 on page 21 shows the outputs for Data# Polling on DQ7. Figure 4 shows the Data# Polling algorithm.

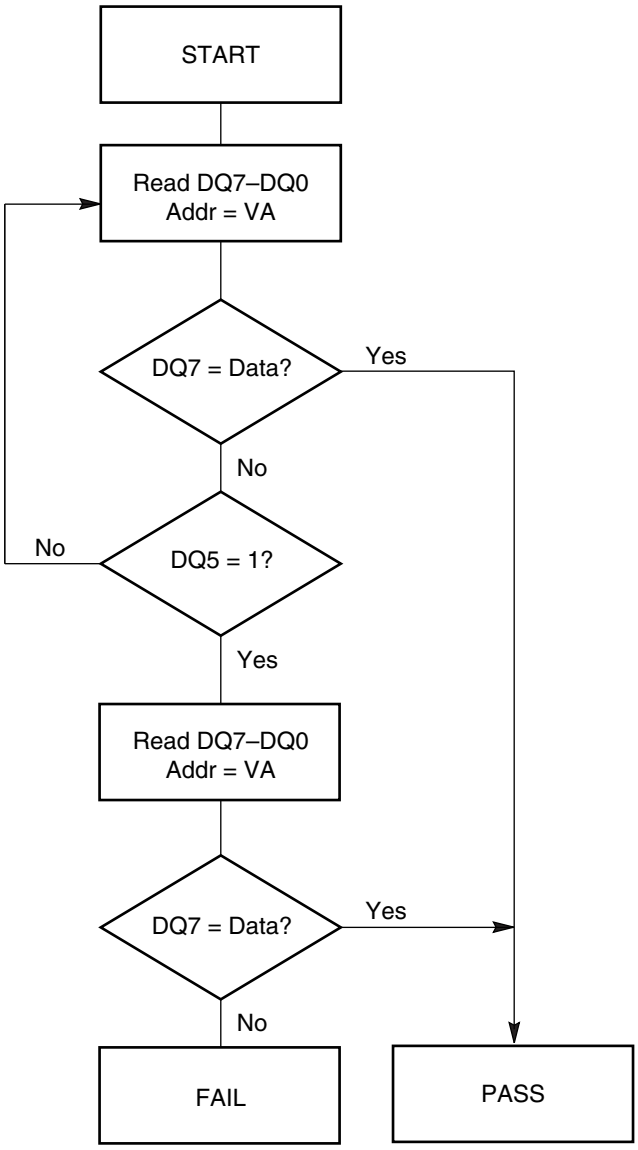


***Notes:***

1. *VA = Valid address for programming. During a sector erase operation, a valid address is an address within any sector selected for erasure. During chip erase, a valid address is any non-protected sector address.*
2. *DQ7 should be rechecked even if DQ5 = “1” because DQ7 may change simultaneously with DQ5.*

**Figure 4. Data# Polling Algorithm**



Downloaded from Elcodis.com electronic components distributor

## RY/BY#: Ready/Busy#

The RY/BY# is a dedicated, open-drain output pin that indicates whether an Embedded Algorithm is in progress or complete. The RY/BY# status is valid after the rising edge of the final WE# pulse in the command sequence. Since RY/BY# is an open-drain output, several RY/BY# pins can be tied together in parallel with a pull-up resistor to $V_{CC}$.

If the output is low (Busy), the device is actively erasing or programming. (This includes programming in the Erase Suspend mode.) If the output is high (Ready), the device is ready to read array data (including during the Erase Suspend mode), or is in the standby mode.

Table 6 shows the outputs for RY/BY#. The timing diagrams for read, reset, program, and erase shows the relationship of RY/BY# to other signals.

## DQ6: Toggle Bit I

Toggle Bit I on DQ6 indicates whether an Embedded Program or Erase algorithm is in progress or complete, or whether the device has entered the Erase Suspend mode. Toggle Bit I may be read at any address, and is valid after the rising edge of the final WE# pulse in the command sequence (prior to the program or erase operation), and during the sector erase time-out.

During an Embedded Program or Erase algorithm operation, successive read cycles to any address cause DQ6 to toggle. (The system may use either OE# or CE# to control the read cycles.) When the operation is complete, DQ6 stops toggling.

After an erase command sequence is written, if all sectors selected for erasing are protected, DQ6 toggles for approximately 100 µs, then returns to reading array data. If not all selected sectors are protected, the Embedded Erase algorithm erases the unprotected sectors, and ignores the selected sectors that are protected.

The system can use DQ6 and DQ2 together to determine whether a sector is actively erasing or is erase-suspended. When the device is actively erasing (that is, the Embedded Erase algorithm is in progress), DQ6 toggles. When the device enters the Erase Suspend mode, DQ6 stops toggling. However, the system must also use DQ2 to determine which sectors are erasing or erase-suspended. Alternatively, the system can use DQ7 (see the subsection on “DQ7: Data# Polling”).

If a program address falls within a protected sector, DQ6 toggles for approximately 2 µs after the program command sequence is written, then returns to reading array data.

DQ6 also toggles during the erase-suspend-program mode, and stops toggling once the Embedded Program algorithm is complete.

The Write Operation Status table shows the outputs for Toggle Bit I on DQ6. Refer to Figure 5 for the toggle bit algorithm, and to the Toggle Bit Timings figure in the “AC Characteristics” section for the timing diagram. The DQ2 vs. DQ6 figure shows the differences between DQ2 and DQ6 in graphical form. See also the subsection on “DQ2: Toggle Bit II”.

## DQ2: Toggle Bit II

The “Toggle Bit II” on DQ2, when used with DQ6, indicates whether a particular sector is actively erasing (that is, the Embedded Erase algorithm is in progress), or whether that sector is erase-suspended. Toggle Bit II is valid after the rising edge of the final WE# pulse in the command sequence.

DQ2 toggles when the system reads at addresses within those sectors that have been selected for erasure. (The system may use either OE# or CE# to control the read cycles.) But DQ2 cannot distinguish whether the sector is actively erasing or is erase-suspended. DQ6, by comparison, indicates whether the device is actively erasing, or is in Erase Suspend, but cannot distinguish which sectors are selected for erasure. Thus, both status bits are required for sector and mode information. Refer to Table 6 on page 22 to compare outputs for DQ2 and DQ6.

Figure 5, on page 20 shows the toggle bit algorithm in flowchart form, and the section “DQ2: Toggle Bit II” explains the algorithm. See also the “DQ6: Toggle Bit I” subsection. Refer to the Toggle Bit Timings figure for the toggle bit timing diagram. The DQ2 vs. DQ6 figure shows the differences between DQ2 and DQ6 in graphical form.

## Reading Toggle Bits DQ6/DQ2

Refer to Figure 5, on page 20 for the following discussion. Whenever the system initially begins reading toggle bit status, it must read DQ7–DQ0 at least twice in a row to determine whether a toggle bit is toggling. Typically, a system would note and store the value of the toggle bit after the first read. After the second read, the system would compare the new value of the toggle bit with the first. If the toggle bit is not toggling, the device has completed the program or erase operation. The system can read array data on DQ7–DQ0 on the following read cycle.

However, if after the initial two read cycles, the system determines that the toggle bit is still toggling, the system also should note whether the value of DQ5 is high (see the section on DQ5). If it is, the system should then determine again whether the toggle bit is toggling, since the toggle bit may have stopped toggling just as DQ5 went high. If the toggle bit is no longer toggling, the device has successfully completed the program or erase operation. If it is still toggling, the device did not complete the operation successfully, and



Downloaded from Elcodis.com electronic components distributor

the system must write the reset command to return to reading array data.

The remaining scenario is that the system initially determines that the toggle bit is toggling and DQ5 has not gone high. The system may continue to monitor the toggle bit and DQ5 through successive read cycles, determining the status as described in the previous paragraph. Alternatively, it may choose to perform other system tasks. In this case, the system must start at the beginning of the algorithm when it returns to determine the status of the operation (top of Figure 5).

## DQ5: Exceeded Timing Limits

DQ5 indicates whether the program or erase time has exceeded a specified internal pulse count limit. Under these conditions DQ5 produces a "1." This is a failure condition that indicates the program or erase cycle was not successfully completed.

The DQ5 failure condition may appear if the system tries to program a "1" to a location that is previously programmed to "0." **Only an erase operation can change a "0" back to a "1."** Under this condition, the device halts the operation, and when the operation has exceeded the timing limits, DQ5 produces a "1."

Under both these conditions, the system must issue the reset command to return the device to reading array data.

## DQ3: Sector Erase Timer

After writing a sector erase command sequence, the system may read DQ3 to determine whether or not an erase operation has begun. (The sector erase timer does not apply to the chip erase command.) If additional sectors are selected for erasure, the entire time-out also applies after each additional sector erase command. When the time-out is complete, DQ3 switches from "0" to "1." The system may ignore DQ3 if the system can guarantee that the time between additional sector erase commands will always be less than 50 µs. See also "Sector Erase Command Sequence" on page 15.

After the sector erase command sequence is written, the system should read the status on DQ7 (Data# Polling) or DQ6 (Toggle Bit I) to ensure the device has accepted the command sequence, and then read DQ3. If DQ3 is "1", the internally controlled erase cycle has begun; all further commands (other than Erase Suspend) are ignored until the erase operation is complete. If DQ3 is "0", the device will accept additional sector erase commands. To ensure the command has been accepted, the system software should check the status of DQ3 prior to and following each subsequent sector erase command. If DQ3 is high on the second status check, the last command might not have been accepted. Table 6 on page 21 shows the outputs for DQ3.

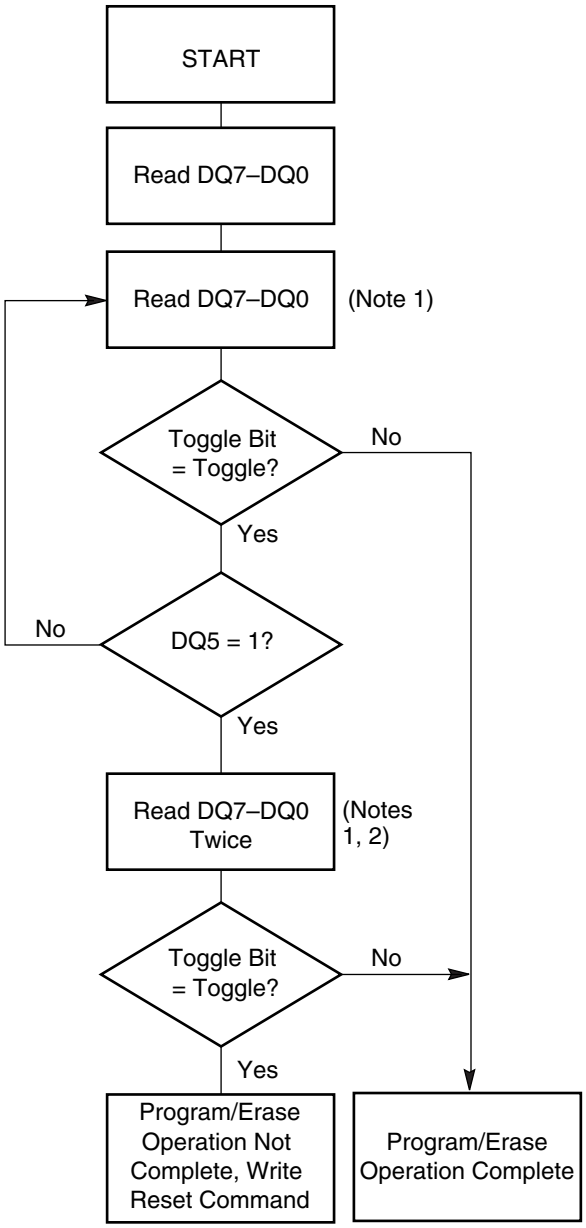


***Notes:***

1. *Read toggle bit twice to determine whether or not it is toggling. See text.*
2. *Recheck toggle bit because it may stop toggling as DQ5 changes to "1". See text.*

**Figure 5. Toggle Bit Algorithm**



Downloaded from Elcodis.com electronic components distributor

**Table 6. Write Operation Status**

| Operation | | DQ7 (Note 1) | DQ6 | DQ5 (Note 2) | DQ3 | DQ2 (Note 1) | RY/BY# |
|---|---|---|---|---|---|---|---|
| Standard Mode | Embedded Program Algorithm | DQ7# | Toggle | 0 | N/A | No toggle | 0 |
| | Embedded Erase Algorithm | 0 | Toggle | 0 | 1 | Toggle | 0 |
| Erase Suspend Mode | Reading within Erase Suspended Sector | 1 | No toggle | 0 | N/A | Toggle | 1 |
| | Reading within Non-Erase Suspended Sector | Data | Data | Data | Data | Data | 1 |
| | Erase-Suspend-Program | DQ7# | Toggle | 0 | N/A | N/A | 0 |

***Notes:***

1. *DQ7 and DQ2 require a valid address when reading status information. Refer to the appropriate subsection for further details.*
2. *DQ5 switches to '1' when an Embedded Program or Embedded Erase operation has exceeded the maximum timing limits. See "DQ5: Exceeded Timing Limits" for more information.*



Downloaded from Elcodis.com electronic components distributor

## ABSOLUTE MAXIMUM RATINGS

Storage Temperature
Plastic Packages . . . . . .–65° C to +150° C

Ambient Temperature
with Power Applied. . . . . .–55° C to +125° C

Voltage with Respect to Ground

$V_{CC}$ (Note 1) . . . . . .–2.0 V to 7.0 V

A9, OE#, RESET# (Note 2). . . . . .–2.0 V to 13.0 V

All other pins (Note 1) . . . . . .–2.0 V to 7.0 V

Output Short Circuit Current (Note 3) . . . . . 200 mA

***Notes:***

1. *Minimum DC voltage on input or I/O pins is –0.5 V. During voltage transitions, inputs may overshoot $V_{SS}$ to –2.0 V for periods of up to 20 ns. See Figure 6. Maximum DC voltage on output and I/O pins is $V_{CC}$ + 0.5 V. During voltage transitions, outputs may overshoot to $V_{CC}$ + 2.0 V for periods up to 20 ns. See Figure 7.*
2. *Minimum DC input voltage on A9, OE#, RESET# pins is –0.5V. During voltage transitions, A9, OE#, RESET# pins may overshoot $V_{SS}$ to –2.0 V for periods of up to 20 ns. See Figure 6. Maximum DC input voltage on A9, OE#, and RESET# is 13.0 V which may overshoot to 13.5 V for periods up to 20 ns.*
3. *No more than one output shorted at a time. Duration of the short circuit should not be greater than one second.*

*Stresses greater than those listed in this section may cause permanent damage to the device. This is a stress rating only; functional operation of the device at these or any other conditions above those indicated in the operational sections of this specification is not implied. Exposure of the device to absolute maximum rating conditions for extended periods may affect device reliability.*

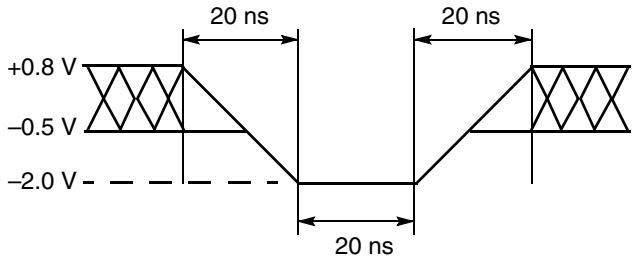


**Figure 6. Maximum Negative Overshoot Waveform**

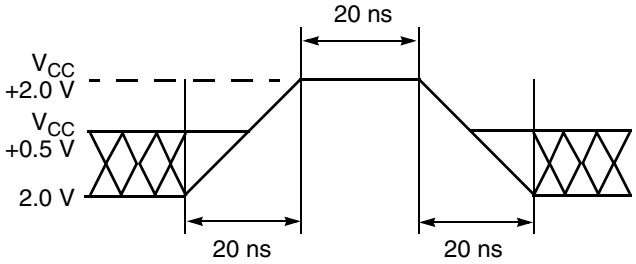


**Figure 7. Maximum Positive Overshoot Waveform**

## OPERATING RANGES

### Industrial (I) Devices

Ambient Temperature ($T_A$) . . . . . .–40° C to +85° C

### Extended (E) Devices

Ambient Temperature ($T_A$) . . . . . .–55° C to +125° C

### $V_{CC}$ Supply Voltages

$V_{CC}$ for ± 5% devices. . . . . .+4.75 V to +5.25 V
$V_{CC}$ for ± 10% devices . . . . . .+4.50 V to +5.50 V

*Operating ranges define those limits between which the functionality of the device is guaranteed.*



Downloaded from Elcodis.com electronic components distributor

## DC CHARACTERISTICS

### TTL/NMOS Compatible

| Parameter Symbol | Parameter Description | Test Description | Min | Typ | Max | Unit |
|---|---|---|---|---|---|---|
| $I_{LI}$ | Input Load Current | $V_{IN} = V_{SS}$ to $V_{CC}$, $V_{CC} = V_{CC}$ Max | | | ±1.0 | µA |
| $I_{LIT}$ | A9 Input Load Current | $V_{CC} = V_{CC}$ Max, A9 = 12.0 V | | | 50 | µA |
| $I_{LO}$ | Output Leakage Current | $V_{OUT} = V_{SS}$ to $V_{CC}$, $V_{CC} = V_{CC}$ Max | | | ±1.0 | µA |
| $I_{CC1}$ | $V_{CC}$ Read Current (Note 1) | CE# = $V_{IL}$, OE# = $V_{IH}$ | | 30 | 40 | mA |
| $I_{CC2}$ | $V_{CC}$ Write Current (Notes 2, 3) | CE# = $V_{IL}$, OE# = $V_{IH}$ | | 40 | 60 | mA |
| $I_{CC3}$ | $V_{CC}$ Standby Current (CE# Controlled) | CE# = $V_{IH}$, RESET# = $V_{IH}$ | | 0.4 | 1.0 | mA |
| $I_{CC4}$ | $V_{CC}$ Standby Current (RESET# Controlled) | $V_{CC} = V_{CC}$ Max, RESET# = $V_{IL}$ | | 0.4 | 1.0 | mA |
| $V_{IL}$ | Input Low Level | | –0.5 | | 0.8 | V |
| $V_{IH}$ | Input High Level | | 2.0 | | $V_{CC}$ + 0.5 | V |
| $V_{ID}$ | Voltage for Autoselect and Sector Protect | $V_{CC}$ = 5.0 V | 11.5 | | 12.5 | V |
| $V_{OL}$ | Output Low Voltage | $I_{OL}$ = 12 mA, $V_{CC} = V_{CC}$ Min | | | 0.45 | V |
| $V_{OH}$ | Output High Level | $I_{OH}$ = –2.5 mA $V_{CC} = V_{CC}$ Min | 2.4 | | | V |
| $V_{LKO}$ | Low $V_{CC}$ Lock-out Voltage | | 3.2 | | 4.2 | V |

### CMOS Compatible

| Parameter Symbol | Parameter Description | Test Description | Min | Typ | Max | Unit |
|---|---|---|---|---|---|---|
| $I_{LI}$ | Input Load Current | $V_{IN} = V_{SS}$ to $V_{CC}$, $V_{CC} = V_{CC}$ Max | | | ±1.0 | µA |
| $I_{LIT}$ | A9 Input Load Current | $V_{CC} = V_{CC}$ Max, A9 = 12.0 V | | | 50 | µA |
| $I_{LO}$ | Output Leakage Current | $V_{OUT} = V_{SS}$ to $V_{CC}$, $V_{CC} = V_{CC}$ Max | | | ±1.0 | µA |
| $I_{CC1}$ | $V_{CC}$ Read Current (Note 1) | CE# = $V_{IL}$, OE# = $V_{IH}$ | | 30 | 40 | mA |
| $I_{CC2}$ | $V_{CC}$ Write Current (Notes 2, 3) | CE# = $V_{IL}$, OE# = $V_{IH}$ | | 30 | 40 | mA |
| $I_{CC3}$ | $V_{CC}$ Standby Current (CE# Controlled) | CE# = $V_{CC}$ ±0.5 V, RESET# = $V_{CC}$ ±0.5 V | | 1 | 5 | µA |
| $I_{CC4}$ | $V_{CC}$ Standby Current (RESET# Controlled) | RESET# = $V_{SS}$ ±0.5 V | | 1 | 5 | µA |
| $V_{IL}$ | Input Low Level | | –0.5 | | 0.8 | V |
| $V_{IH}$ | Input High Level | | 0.7x $V_{CC}$ | | $V_{CC}$ + 0.3 | V |
| $V_{ID}$ | Voltage for Autoselect and Sector Protect | $V_{CC}$ = 5.0 V | 11.5 | | 12.5 | V |
| $V_{OL}$ | Output Low Voltage | $I_{OL}$ = 12 mA, $V_{CC} = V_{CC}$ Min | | | 0.45 | V |
| $V_{OH1}$ | Output High Voltage | $I_{OH}$ = –2.5 mA, $V_{CC} = V_{CC}$ Min | 0.85 $V_{CC}$ | | | V |
| $V_{OH2}$ | | $I_{OH}$ = –100 µA, $V_{CC} = V_{CC}$ Min | $V_{CC}$ – 0.4 | | | V |
| $V_{LKO}$ | Low $V_{CC}$ Lock-out Voltage | | 3.2 | | 4.2 | V |

***Notes for DC Characteristics (both tables):***

1. *The $I_{CC}$ current is typically less than 1 mA/MHz, with OE# at $V_{IH}$.*
2. *$I_{CC}$ active while Embedded Program or Embedded Erase algorithm is in progress.*
3. *Not 100% tested.*



Downloaded from Elcodis.com electronic components distributor

## TEST CONDITIONS

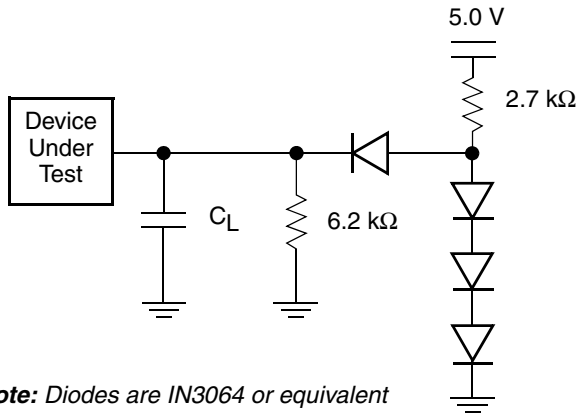


***Note:*** *Diodes are IN3064 or equivalent*

**Figure 8. Test Setup**

**Table 7. Test Specifications**

| Test Condition | -75 | All others | Unit |
|---|---|---|---|
| Output Load | 1 TTL gate | | |
| Output Load Capacitance, $C_L$ (including jig capacitance) | 30 | 100 | pF |
| Input Rise and Fall Times | 5 | 20 | ns |
| Input Pulse Levels | 0.0–3.0 | 0.45–2.4 | V |
| Input timing measurement reference levels | 1.5 | 0.8 | V |
| Output timing measurement reference levels | 1.5 | 2.0 | V |

## KEY TO SWITCHING WAVEFORMS

| WAVEFORM | INPUTS | OUTPUTS |
|---|---|---|
| | Steady | |
| | Changing from H to L | |
| | Changing from L to H | |
| | Don't Care, Any Change Permitted | Changing, State Unknown |
| | Does Not Apply | Center Line is High Impedance State (High Z) |



Downloaded from Elcodis.com electronic components distributor

## AC CHARACTERISTICS

### Read-only Operations

| Parameter Symbol | | Parameter Description | | Test Setup | | Speed Options | | Unit |
|---|---|---|---|---|---|---|---|---|
| JEDEC | Std | | | | | -75 | -90 | |
| $t_{AVAV}$ | $t_{RC}$ | Read Cycle Time (Note 1) | | | Min | 70 | 90 | ns |
| $t_{AVQV}$ | $t_{ACC}$ | Address to Output Delay | | CE# = $V_{IL}$<br>OE# = $V_{IL}$ | Max | 70 | 90 | ns |
| $t_{ELQV}$ | $t_{CE}$ | Chip Enable to Output Delay | | OE# = $V_{IL}$ | Max | 70 | 90 | ns |
| $t_{GLQV}$ | $t_{OE}$ | Output Enable to Output Delay | | | Max | 40 | 40 | ns |
| | $t_{OEH}$ | Output Enable Hold Time (Note 1) | Read | | Min | 0 | | ns |
| | | | Toggle and Data# Polling | | Min | 10 | | ns |
| $t_{EHQZ}$ | $t_{DF}$ | Chip Enable to Output High Z (Note 1) | | | Max | 20 | 20 | ns |
| $t_{GHQZ}$ | $t_{DF}$ | Output Enable to Output High Z (Note 1) | | | Max | 20 | 20 | ns |
| $t_{AXQX}$ | $t_{OH}$ | Output Hold Time From Addresses CE# or OE# Whichever Occurs First | | | Min | 0 | | ns |
| | $t_{Ready}$ | RESET# Pin Low to Read Mode (Note 1) | | | Max | 20 | | µs |

***Notes:***

1. *Not 100% tested.*
2. *Refer to Figure 8 and Table 7 for test specifications.*

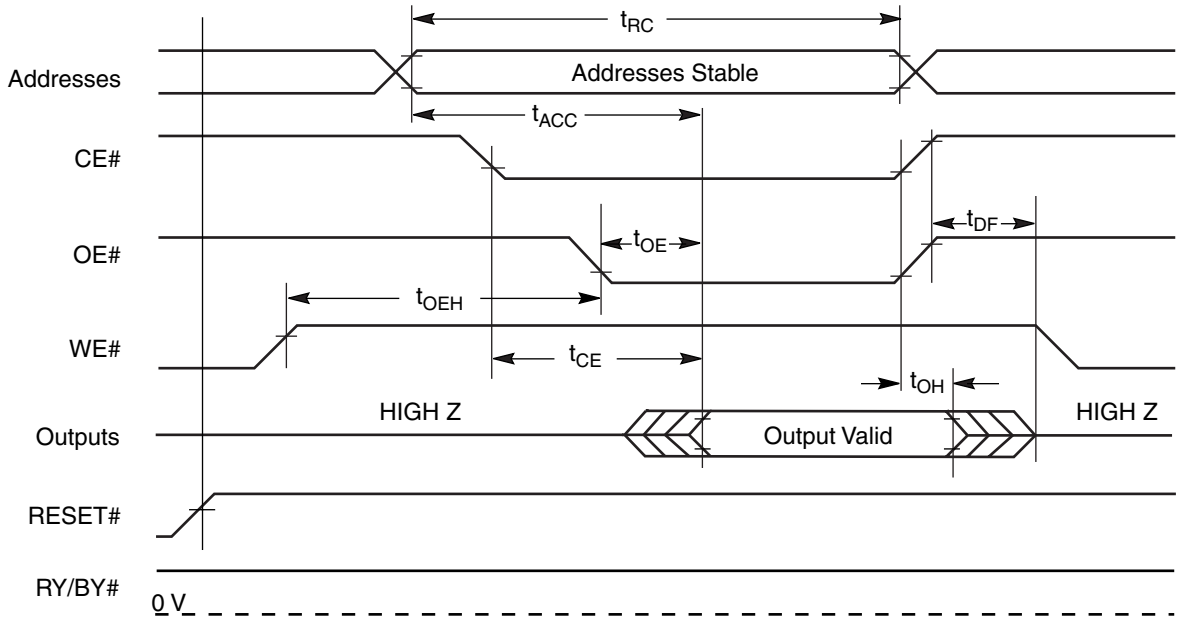


**Figure 9. Read Operation Timings**



Downloaded from Elcodis.com electronic components distributor

## AC CHARACTERISTICS

### Hardware Reset (RESET#)

| Parameter | | | | | | |
|---|---|---|---|---|---|---|
| JEDEC | Std | Description | Test Setup | | All Speed Options | Unit |
| | $t_{READY}$ | RESET# Pin Low (During Embedded Algorithms) to Read or Write (See Note) | | Max | 20 | µs |
| | $t_{READY}$ | RESET# Pin Low (NOT During Embedded Algorithms) to Read or Write (See Note) | | Max | 500 | ns |
| | $t_{RP}$ | RESET# Pulse Width | | Min | 500 | ns |
| | $t_{RH}$ | RESET# High Time Before Read (See Note) | | Min | 50 | ns |
| | $t_{RB}$ | RY/BY# Recovery Time | | Min | 0 | ns |

***Note:*** *Not 100% tested.*

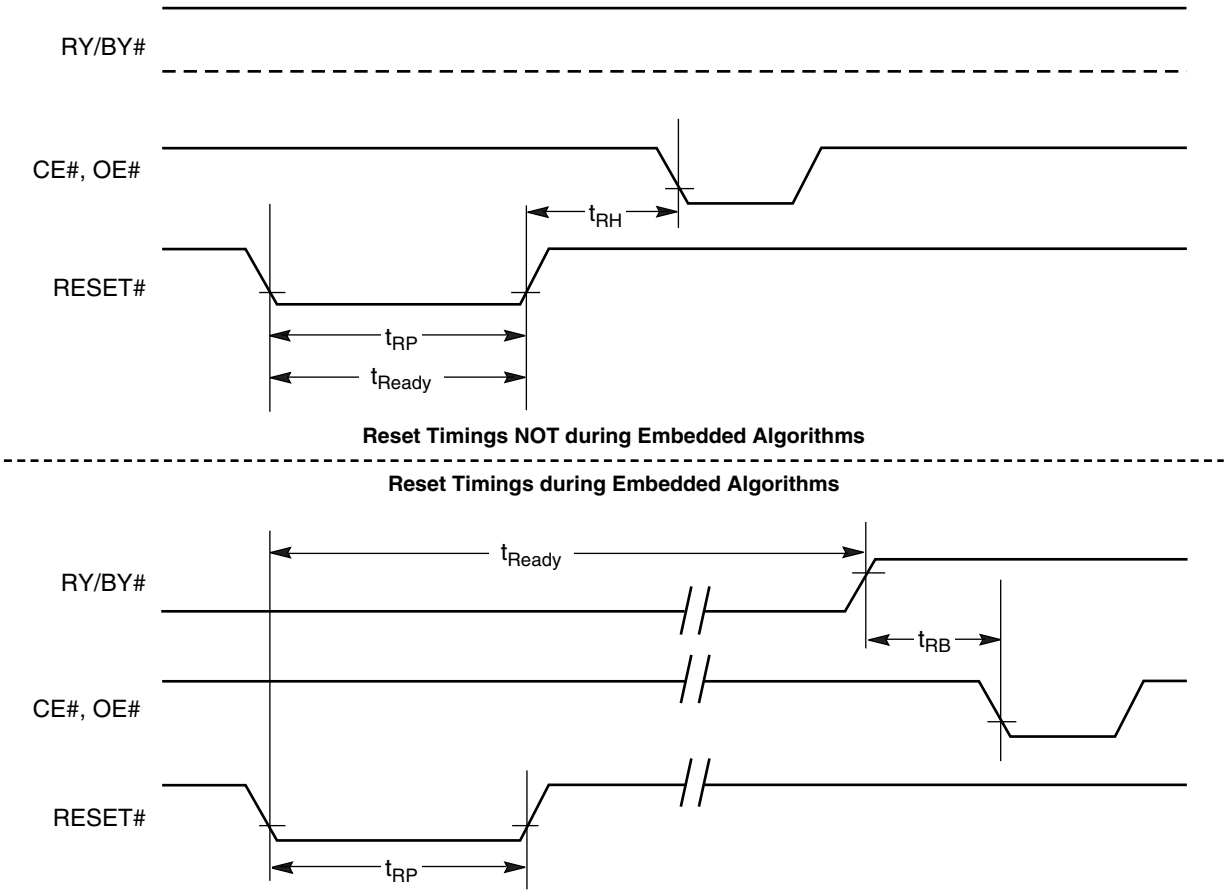


**Figure 10. RESET# Timings**



Downloaded from Elcodis.com electronic components distributor

## AC CHARACTERISTICS

### Write (Erase/Program) Operations

| Parameter | | Parameter Description | | Speed Options | | Unit |
|---|---|---|---|---|---|---|
| JEDEC | Std | | | -75 | -90 | |
| $t_{AVAV}$ | $t_{WC}$ | Write Cycle Time (Note 1) | Min | 70 | 90 | ns |
| $t_{AVWL}$ | $t_{AS}$ | Address Setup Time | Min | 0 | | ns |
| $t_{WLAX}$ | $t_{AH}$ | Address Hold Time | Min | 40 | 45 | ns |
| $t_{DVWH}$ | $t_{DS}$ | Data Setup Time | Min | 40 | 45 | ns |
| $t_{WHDX}$ | $t_{DH}$ | Data Hold Time | Min | 0 | | ns |
| $t_{GHWL}$ | $t_{GHWL}$ | Read Recover Time Before Write (OE# high to WE# low) | Min | 0 | | ns |
| $t_{ELWL}$ | $t_{CS}$ | CE# Setup Time | Min | 0 | | ns |
| $t_{WHEH}$ | $t_{CH}$ | CE# Hold Time | Min | 0 | | ns |
| $t_{WLWH}$ | $t_{WP}$ | Write Pulse Width | Min | 40 | 45 | ns |
| $t_{WHWL}$ | $t_{WPH}$ | Write Pulse Width High | Min | 20 | | ns |
| $t_{WHWH1}$ | $t_{WHWH1}$ | Byte Programming Operation (Note 2) | Typ | 7 | | µs |
| $t_{WHWH2}$ | $t_{WHWH2}$ | Sector Erase Operation (Note 2) | Typ | 1 | | sec |
| | | | Max | 8 | | sec |
| | $t_{VCS}$ | $V_{CC}$ Set Up Time (Note 1) | Min | 50 | | µs |
| | $t_{BUSY}$ | WE# to RY/BY# Valid | Max | 40 | 40 | ns |

***Notes:***

1. *Not 100% tested.*
2. *See the "Erase And Programming Performance" section for more information.*



Downloaded from Elcodis.com electronic components distributor

## AC CHARACTERISTICS

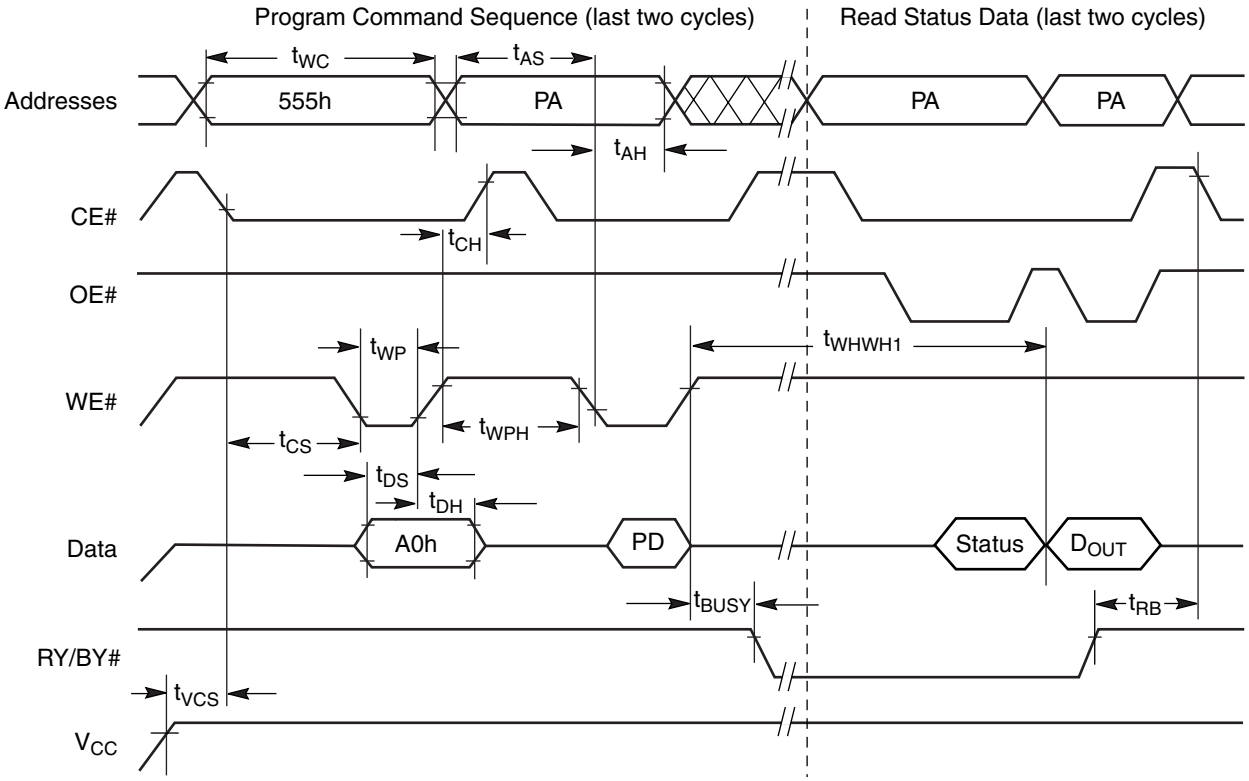


***Note:*** *PA = program address, PD = program data, $D_{OUT}$ is the true data at the program address.*

**Figure 11. Program Operation Timings**



Downloaded from Elcodis.com electronic components distributor

## AC CHARACTERISTICS

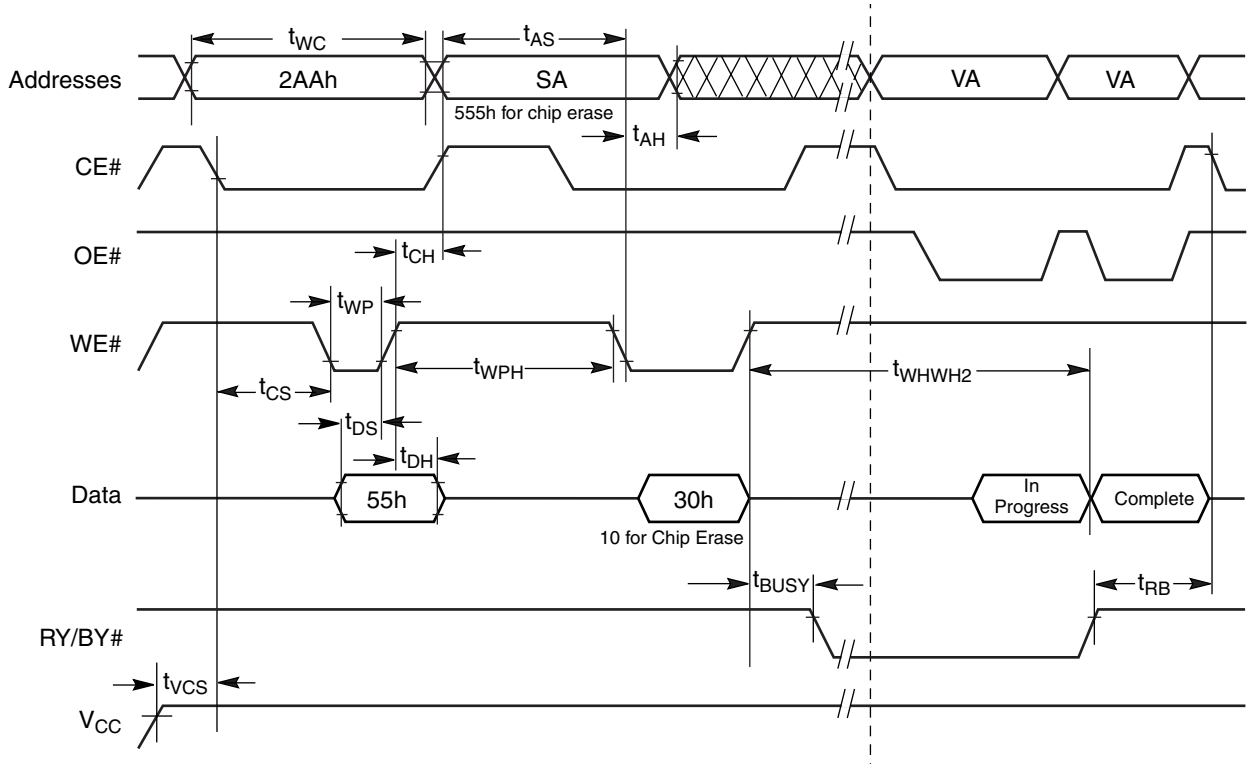


***Note:*** *SA = Sector Address. VA = Valid Address for reading status data.*

**Figure 12. Chip/Sector Erase Operation Timings**



Downloaded from Elcodis.com electronic components distributor

## AC CHARACTERISTICS

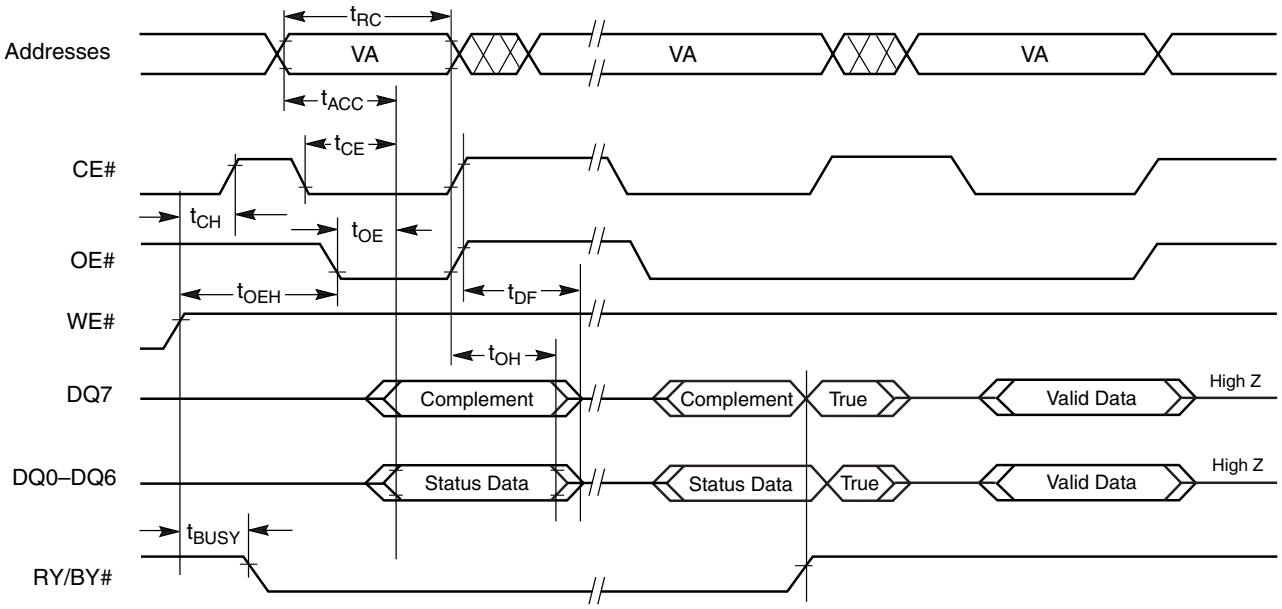


***Note:***
*VA = Valid address. Illustration shows first status cycle after command sequence, last status read cycle, and array data read cycle.*

**Figure 13. Data# Polling Timings (During Embedded Algorithms)**

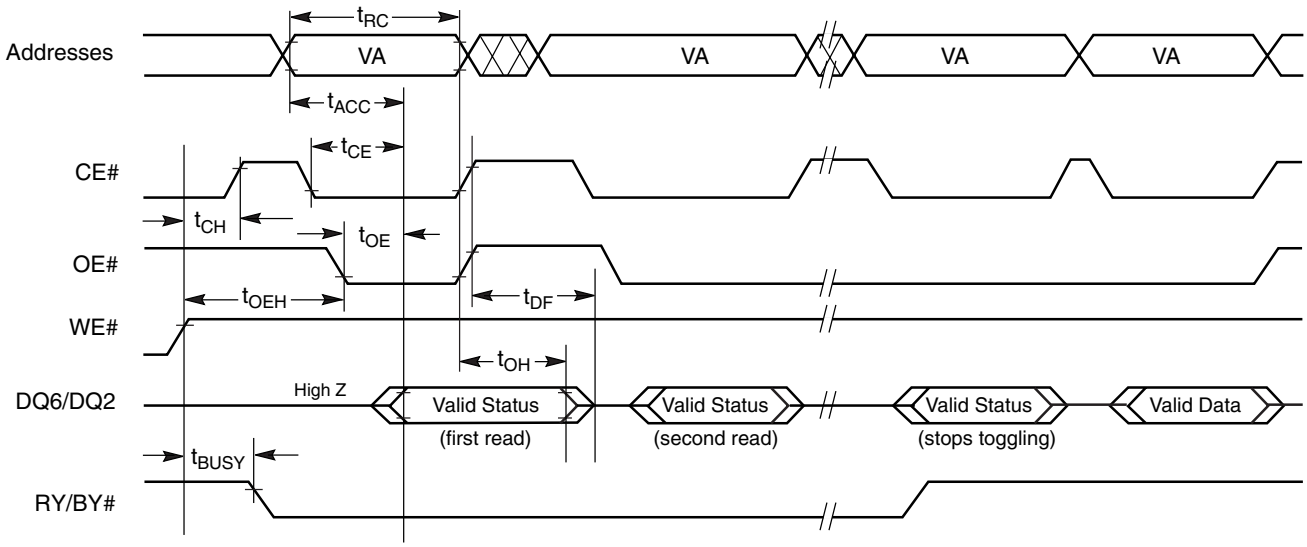


***Note:***
*VA = Valid address; not required for DQ6. Illustration shows first two status cycle after command sequence, last status read cycle, and array data read cycle.*

**Figure 14. Toggle Bit Timings (During Embedded Algorithms)**



Downloaded from Elcodis.com electronic components distributor

## AC CHARACTERISTICS

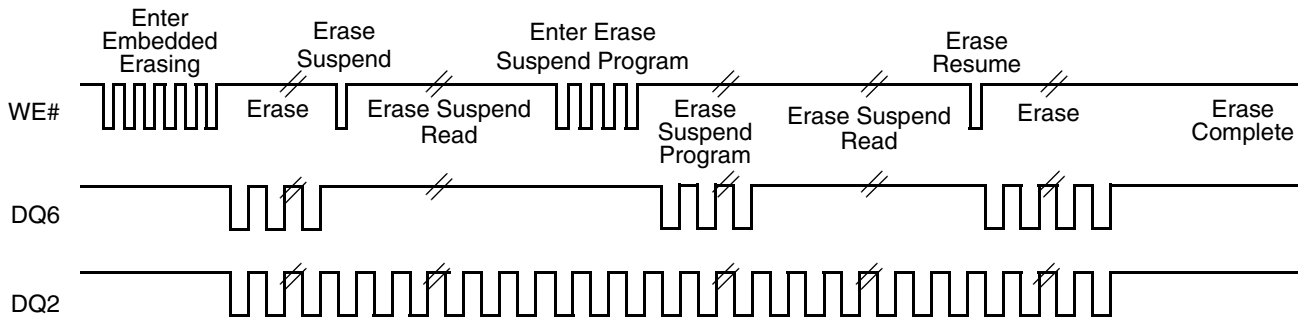


***Note:*** *The system may use OE# or CE# to toggle DQ2 and DQ6. DQ2 toggles only when read at an address within the erase-suspended sector.*

**Figure 15. DQ2 vs. DQ6**

## Temporary Sector Unprotect

| Parameter | | | | | |
|---|---|---|---|---|---|
| **JEDEC** | **Std** | **Description** | | **All Speed Options** | **Unit** |
| | $t_{VIDR}$ | $V_{ID}$ Rise and Fall Time (See Note) | Min | 500 | ns |
| | $t_{RSP}$ | RESET# Setup Time for Temporary Sector Unprotect | Min | 4 | µs |

***Note:*** *Not 100% tested.*

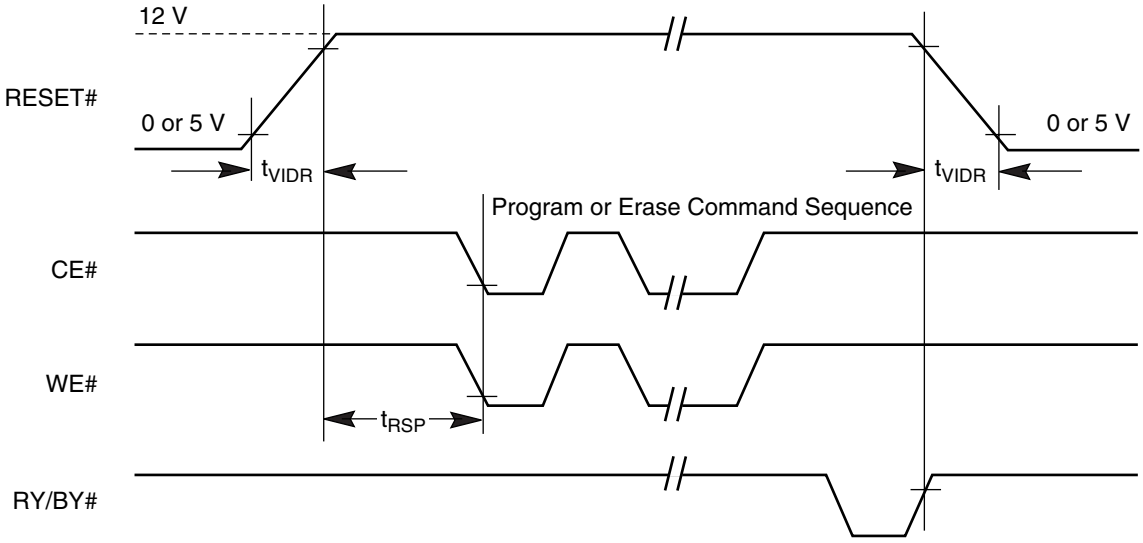


**Figure 16. Temporary Sector Group Unprotect Timings**



Downloaded from Elcodis.com electronic components distributor

## AC CHARACTERISTICS

### Write (Erase/Program) Operations—Alternate CE# Controlled Writes

| Parameter Symbol | | Parameter Description | | Speed Options | | Unit |
|---|---|---|---|---|---|---|
| JEDEC | Std | | | -75 | -90 | |
| $t_{AVAV}$ | $t_{WC}$ | Write Cycle Time (Note 1) | Min | 70 | 90 | ns |
| $t_{AVEL}$ | $t_{AS}$ | Address Setup Time | Min | 0 | | ns |
| $t_{ELAX}$ | $t_{AH}$ | Address Hold Time | Min | 40 | 45 | ns |
| $t_{DVEH}$ | $t_{DS}$ | Data Setup Time | Min | 40 | 45 | ns |
| $t_{EHDX}$ | $t_{DH}$ | Address Hold Time | Min | 0 | | ns |
| $t_{GHEL}$ | $t_{GHEL}$ | Read Recover Time Before Write | Min | 0 | | ns |
| $t_{WLEL}$ | $t_{WS}$ | CE# Setup Time | Min | 0 | | ns |
| $t_{EHWH}$ | $t_{WH}$ | CE# Hold Time | Min | 0 | | ns |
| $t_{ELEH}$ | $t_{CP}$ | Write Pulse Width | Min | 40 | 45 | ns |
| $t_{EHEL}$ | $t_{CPH}$ | Write Pulse Width High | Min | 20 | | ns |
| $t_{WHWH1}$ | $t_{WHWH1}$ | Byte Programming Operation (Note 2) | Typ | 7 | | µs |
| $t_{WHWH2}$ | $t_{WHWH2}$ | Sector Erase Operation (Note 2) | Typ | 1 | | sec |
| | | | Max | 8 | | sec |

***Notes:***

1. *Not 100% tested.*
2. *See the "Erase And Programming Performance" section for more information.*



Downloaded from Elcodis.com electronic components distributor

## AC CHARACTERISTICS

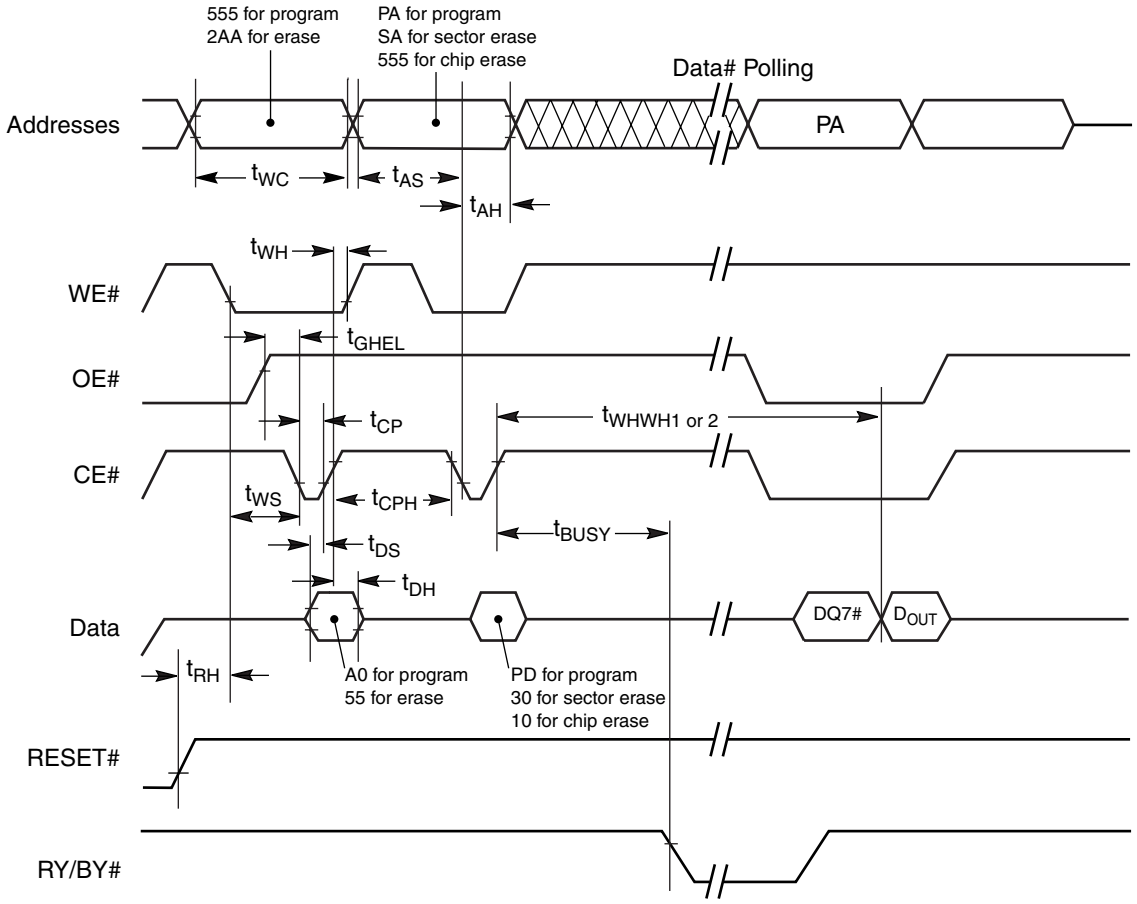


***Notes:***

1. *PA = Program Address, PD = Program Data, SA = Sector Address, DQ7# = Complement of Data Input, $D_{OUT}$ = Array Data.*
2. *Figure indicates the last two bus cycles of the command sequence.*

**Figure 17. Alternate CE# Controlled Write Operation Timings**



Downloaded from Elcodis.com electronic components distributor

## ERASE AND PROGRAMMING PERFORMANCE

| Parameter | Typ (Note 1) | Max (Note 2) | Unit | Comments |
|---|---|---|---|---|
| Sector Erase Time | 1 | 8 | sec | Excludes 00h programming prior to erasure (Note 4) |
| Chip Erase Time | 64 | | sec | |
| Byte Programming Time | 7 | 300 | µs | Excludes system-level overhead (Note 5) |
| Chip Programming Time (Note 3) | 28.8 | 86.4 | sec | |

***Notes:***

1. *Typical program and erase times assume the following conditions: 25° C, 5.0 V $V_{CC}$, 1,000,000 cycles. Additionally, programming typicals assume checkerboard pattern.*
2. *Under worst case conditions of 90°C, $V_{CC}$ = 4.5 V, 1,000,000 cycles (4.75 V for -75).*
3. *The typical chip programming time is considerably less than the maximum chip programming time listed, since most bytes program faster than the maximum byte program time listed. If the maximum byte program time given is exceeded, only then does the device set DQ5 = 1. See the section on DQ5 for further information.*
4. *In the pre-programming step of the Embedded Erase algorithm, all bytes are programmed to 00h before erasure.*
5. *System-level overhead is the time required to execute the four-bus-cycle sequence for programming. See Table 5 for further information on command definitions.*
6. *The device has a minimum erase and program cycle endurance of 1,000,000 cycles.*

## LATCHUP CHARACTERISTIC

| Description | Min | Max |
|---|---|---|
| Input Voltage with respect to $V_{SS}$ on I/O pins | –1.0 V | $V_{CC}$ + 1.0 V |
| $V_{CC}$ Current | –100 mA | +100 mA |

***Note:*** *Includes all pins except $V_{CC}$. Test conditions: $V_{CC}$ = 5.0 Volt, one pin at a time.*

## TSOP AND SO PIN CAPACITANCE

| Parameter Symbol | Parameter Description | Test Conditions | Min | Max | Unit |
|---|---|---|---|---|---|
| $C_{IN}$ | Input Capacitance | $V_{IN}$ = 0 | 6 | 7.5 | pF |
| $C_{OUT}$ | Output Capacitance | $V_{OUT}$ = 0 | 8.5 | 12 | pF |
| $C_{IN2}$ | Control Pin Capacitance | $V_{IN}$ = 0 | 7.5 | 9 | pF |

***Notes:***

1. *Sampled, not 100% tested.*
2. *Test conditions $T_A$ = 25° C, f = 1.0 MHz.*

## DATA RETENTION

| Parameter | Test Conditions | Min | Unit |
|---|---|---|---|
| Minimum Pattern Data Retention Time | 150° C | 10 | Years |
| | 125° C | 20 | Years |



Downloaded from Elcodis.com electronic components distributor

## PHYSICAL DIMENSIONS

### SO 044–44-Pin Small Outline Package

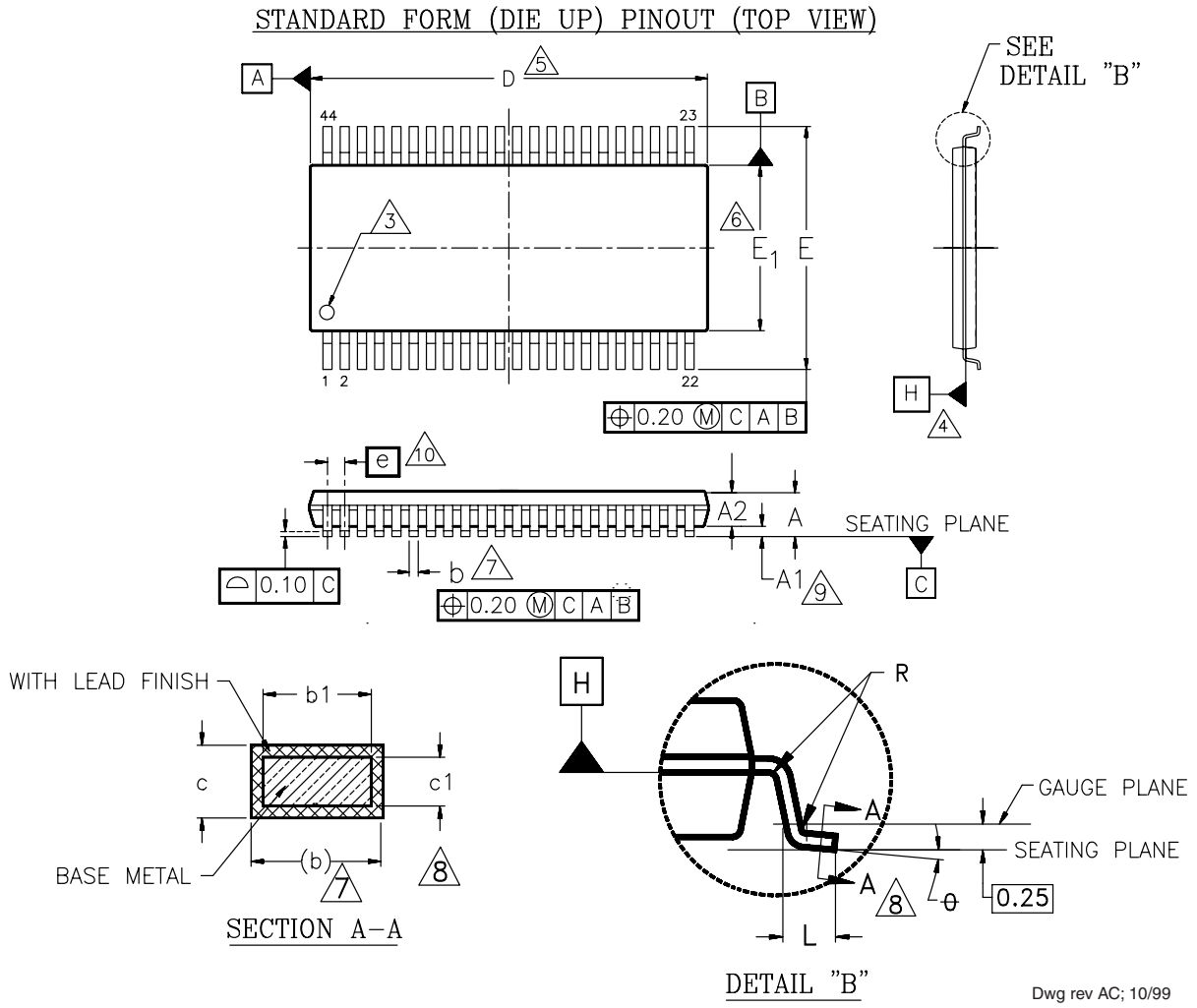


| PACKAGE | SO 044 | | |
|---|---|---|---|
| JEDEC | MO–180 (A) AA | | |
| SYMBOL | MIN | NOM | MAX |
| A | — | — | 2.80 |
| A1 | 0.15 | 0.23 | 0.35 |
| A2 | 2.17 | 2.30 | 2.45 |
| b | 0.35 | — | 0.50 |
| b1 | 0.35 | 0.40 | 0.45 |
| c | 0.10 | — | 0.21 |
| c1 | 0.10 | 0.15 | 0.18 |
| D | 28.00 | 28.20 | 28.40 |
| E | 15.70 | 16.00 | 16.30 |
| E1 | 13.10 | 13.30 | 13.50 |
| e | 1.27 BSC | | |
| L | 0.60 | 0.80 | 1.00 |
| R | 0.09 | — | — |
| θ | 0° | 4° | 8° |

NOTES:

1. CONTROLLING DIMENSIONS ARE IN MILLIMETERS (mm).
2. DIMENSIONING AND TOLERANCING CONFORM TO ASME Y14.5M–1994.
3. PIN 1 IDENTIFIER FOR STANDARD FORM (DIE UP) OR REVERSE FORM (DIE DOWN) PINOUTS.
4. DATUMS A AND B AND DIMENSIONS D AND E1 ARE DETERMINED AT DATUM H.
5. DIMENSION "D" DOES NOT INCLUDE MOLD FLASH, PROTUSIONS OR GATE BURRS. MOLD FLASH, PROTRUSIONS OR GATE BURRS SHALL NOT EXCEED 0.15 mm PER END.
6. DIMENSION "E1" DOES NOT INCLUDE INTERLEAD FLASH OR PROTRUSION. INTERLEAD FLASH OR PROTRUSION SHALL NOT EXCEED 0.25 mm PER SIDE.
7. DIMENSION b DOES NOT INCLUDE DAMBAR PROTRUSION/INTRUSION. ALLOWABLE DAMBAR PROTRUSION SHALL NOT EXCEED 0.15 mm PER SIDE. DAMBAR INTRUSION SHALL NOT REDUCE DIMENSION b BY MORE THAN 0.07 mm AT LEAST MATERIAL CONDITION.
8. THESE DIMENSIONS APPLY TO THE FLAT SECTION OF THE LEAD BETWEEN 0.10 mm AND 0.25 mm FROM THE LEAD TIPS.
9. A1 IS DEFINED AS THE DISTANCE FROM THE SEATING PLANE TO THE LOWEST POINT OF THE PACKAGE.
10. DIMENSION "e" IS MEASURED AT THE CENTERLINE OF THE LEADS.
11. LEAD COPLANARITY SHALL BE WITHIN 0.10 mm AS MEASURED FROM THER SEATING PLANE.



Downloaded from Elcodis.com electronic components distributor

## PHYSICAL DIMENSIONS

### TS 040–40-Pin Standard Thin Small Outline Package

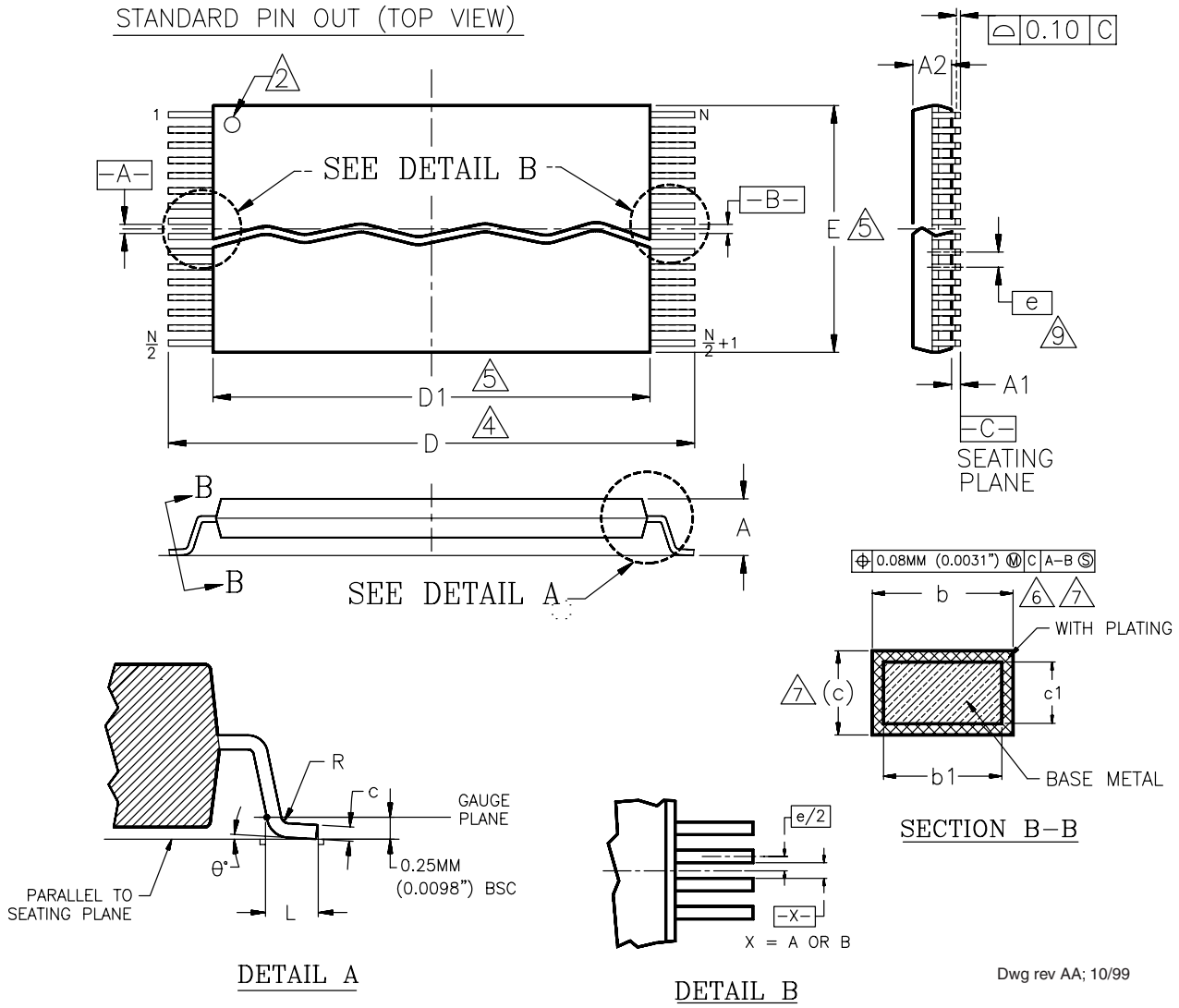


| Package | TS 40 | | |
|---|---|---|---|
| Jedec | MO–142 (B) CD | | |
| Symbol | MIN | NOM | MAX |
| A | — | — | 1.20 |
| A1 | 0.05 | — | 0.15 |
| A2 | 0.95 | 1.00 | 1.05 |
| b1 | 0.17 | 0.20 | 0.23 |
| b | 0.17 | 0.22 | 0.27 |
| c1 | 0.10 | — | 0.16 |
| c | 0.10 | — | 0.21 |
| D | 19.80 | 20.00 | 20.20 |
| D1 | 18.30 | 18.40 | 18.50 |
| E | 9.90 | 10.00 | 10.10 |
| e | 0.50 BASIC | | |
| L | 0.50 | 0.60 | 0.70 |
| θ | 0° | 3° | 5° |
| R | 0.08 | — | 0.20 |
| N | 40 | | |

NOTES:

1. CONTROLLING DIMENSIONS ARE IN MILLIMETERS (mm). (DIMENSIONING AND TOLERANCING CONFORMS TO ANSI Y14.5M-1982)
2. PIN 1 IDENTIFIER FOR STANDARD PIN OUT (DIE UP).
3. PIN 1 IDENTIFIER FOR REVERSE PIN OUT (DIE DOWN): INK OR LASER MARK.
4. TO BE DETERMINED AT THE SEATING PLANE -C-. THE SEATING PLANE IS DEFINED AS THE PLANE OF CONTACT THAT IS MADE WHEN THE PACKAGE LEADS ARE ALLOWED TO REST FREELY ON A FLAT HORIZONTAL SURFACE.
5. DIMENSIONS D1 AND E DO NOT INCLUDE MOLD PROTRUSION. ALLOWABLE MOLD PROTUSION IS 0.15mm (.0059") PER SIDE.
6. DIMENSION b DOES NOT INCLUDE DAMBAR PROTUSION. ALLOWABLE DAMBAR PROTUSION SHALL BE 0.08mm (0.0031") TOTAL IN EXCESS OF b DIMENSION AT MAX. MATERIAL CONDITION. MINIMUM SPACE BETWEEN PROTRUSION AND AN ADJACENT LEAD TO BE 0.07mm (0.0028").
7. THESE DIMENSIONS APPLY TO THE FLAT SECTION OF THE LEAD BETWEEN 0.10mm (.0039") AND 0.25mm (0.0098") FROM THE LEAD TIP.
8. LEAD COPLANARITY SHALL BE WITHIN 0.10mm (0.004") AS MEASURED FROM THE SEATING PLANE.
9. DIMENSION "e" IS MEASURED AT THE CENTERLINE OF THE LEADS.



Downloaded from Elcodis.com electronic components distributor

# REVISION SUMMARY

## Revision A (June 1998)

Initial release.

## Revision B (July 1998)

### Distinctive Characteristics

Changed typical active read current to 30 mA to match DC Characteristics table.

### Operating Ranges

Corrected temperature range descriptions to “ambient.”

## Revision C (January 1999)

### Distinctive Characteristics

Added 20-year data retention subbullet.

## Revision C+1 (April 14, 1999)

Deleted duplicate sections in the full data sheet.

### Data Retention

Added table.

## Revision D (November 17, 1999)

### AC Characteristics—Figure 11. Program Operations Timing and Figure 12. Chip/Sector Erase Operations

Deleted $t_{GHWL}$ and changed OE# waveform to start at high.

### Physical Dimensions

Replaced figures with more detailed illustrations.

## Revision D+1 (December 5, 2000)

Added table of contents.

### Ordering Information

Deleted burn-in option.

## Revision D+2 (November 8, 2004)

### Global

Added cover page, colophon, and referenced links

Updated Trademark.

### Ordering Information

Added temperature range for Pb-free Packages.

### Valid Combinations

Added new combinations.

## Revision D3 (December 22, 2005)

### Global

Deleted 120 and 150 ns speed options, and deleted reverse TSOP package option.

## Revision D4 (May 19, 2006)

Added “Not recommended for new designs” note.

### AC Characteristics

Changed $t_{BUSY}$ specification to maximium value.

## Revision D5 (November 2, 2006)

Deleted “Not recommended for new designs” note.

## Revision D6 (March 5, 2009)

### Global

Added obsolescence information.

## Revision D7 (August 3, 2009)

### Global

Removed obsolescence information.

## Revision D8 (November 11, 2009)

### Global

Removed all commercial temperature range options.



Downloaded from Elcodis.com electronic components distributor

***Colophon***

The products described in this document are designed, developed and manufactured as contemplated for general use, including without limitation, ordinary industrial use, general office use, personal use, and household use, but are not designed, developed and manufactured as contemplated (1) for any use that includes fatal risks or dangers that, unless extremely high safety is secured, could have a serious effect to the public, and could lead directly to death, personal injury, severe physical damage or other loss (i.e., nuclear reaction control in nuclear facility, aircraft flight control, air traffic control, mass transport control, medical life support system, missile launch control in weapon system), or (2) for any use where chance of failure is intolerable (i.e., submersible repeater and artificial satellite). Please note that Spansion Inc. will not be liable to you and/or any third party for any claims or damages arising in connection with above-mentioned uses of the products. Any semiconductor devices have an inherent chance of failure. You must protect against injury, damage or loss from such failures by incorporating safety design measures into your facility and equipment such as redundancy, fire protection, and prevention of over-current levels and other abnormal operating conditions. If any products described in this document represent goods or technologies subject to certain restrictions on export under the Foreign Exchange and Foreign Trade Law of Japan, the US Export Administration Regulations or the applicable laws of any other country, the prior authorization by the respective government entity will be required for export of those pr

**Trademarks**

Copyright © 1998–2005 Advanced Micro Devices, Inc. All rights reserved. AMD, the AMD logo, and combinations thereof are registered trademarks of Advanced Micro Devices, Inc. ExpressFlash is a trademark of Advanced Micro Devices, Inc. Product names used in this publication are for identification purposes only and may be trademarks of their respective companies.

Copyright © 2006-2009 Spansion Inc. All rights reserved. Spansion®, the Spansion logo, MirrorBit®, MirrorBit® Eclipse™, ORNAND™, Eco-RAM™ and combinations thereof, are trademarks and registered trademarks of Spansion LLC in the United States and other countries. Other names used are for informational purposes only and may be trademarks of their respective owners.



Downloaded from Elcodis.com electronic components distributor