molex
one company > a world of innovation

This document was generated on 06/05/2010

PLEASE CHECK WWW.MOLEX.COM FOR LATEST PART INFORMATION

Part Number: 0526101472
Status: Active
Overview:
Description: 1.00mm (.039") Pitch FFC/FPC Connector, SMT, Vertical, ZIF, Gold (Au) Contact Plating, 14 Circuits, Lead-free, High Barrier Packaging

EU RoHS
ELV and RoHS Compliant
REACH SVHC
Not Reviewed
Halogen-Free Status
Not Reviewed

China RoHS

Need more information on product environmental compliance?

Email productcompliance@molex.com
For a multiple part number RoHS Certificate of Compliance, click here

Please visit the Contact Us section for any non-product compliance questions.

Search Parts in this Series
52610Series

Agency Certification

CSA	LR19980
UL	E29179

General

Product Family	FFC/FPC Connectors
Series	52610
Overview	ffc_fpc_smt
Product Name	N/A

Physical

Circuits (Loaded)	14
Contact Position	N/A
Durability (mating cycles max)	30
Entry Angle	Vertical
Flammability	94V-0
Mated Height (in)	0.226 In
Mated Height (mm)	5.75 mm
Material - Metal	Phosphor Bronze
Material - Plating Mating	Gold
Material - Plating Termination	Tin
Material - Resin	Nylon
Number of Rows	1
Orientation	Vertical
PCB Locator	No
PCB Retention	None
Packaging Type	Embossed Tape on Reel
Pitch - Mating Interface (in)	0.039 In
Pitch - Mating Interface (mm)	1.00 mm
Polarized to PCB	No
Stackable	No
Temperature Range - Operating	-40°C to +85°C
Termination Interface: Style	Surface Mount
Wire/Cable Type	FFC/FPC

Electrical

Current - Maximum per Contact	1A
Voltage - Maximum	125V AC (RMS)/DC

Material Info

Reference - Drawing Numbers

Packaging Specification	SPK-52610-001, SPK-52610-003
Product Specification	PS-52610-007, RPS-52610-048, RPS-52610-052, RPS-52610-053, RPS-52610-058, RPS-52610-061
Sales Drawing	SD-52610-036, SD-52610-037

This document was generated on 06/05/2010

PLEASE CHECK WWW.MOLEX.COM FOR LATEST PART INFORMATION

Downloaded from Elcodis.com electronic components distributor

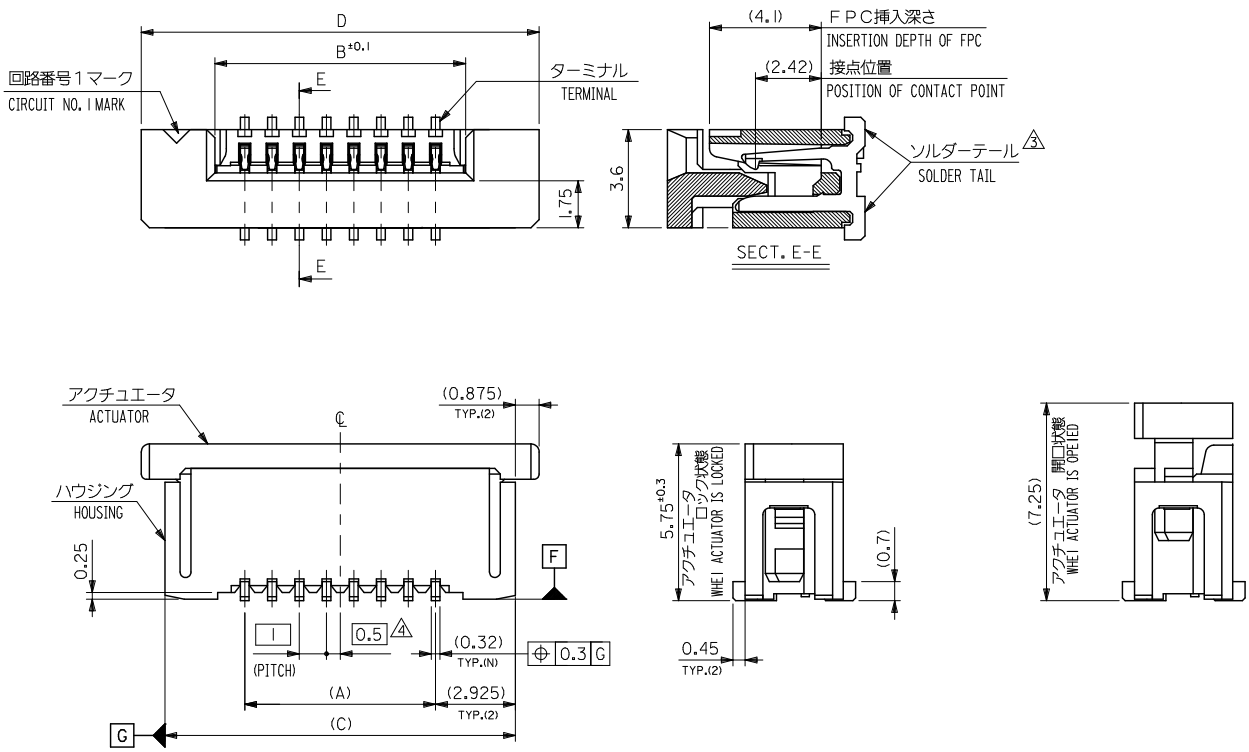

REVISED EC NO: J2009-2316 DRWN:CARIZONO 2009/04/20 CHKD:T.HARUYAMA 2009/04/20 APPR:NUKITA 2009/04/21	GENERAL TOLERANCES (UNLESS SPECIFIED)	DIMENSION STYLE MM ONLY	SCALE ---	52610-**15	MODEL NO.
				DESIGN UNITS METRIC	THIRD ANGLE PROJECTION
	10 UNDER ±0.2	DRAWN BY M.NABEI DATE '05/07/21	TITLE 1.0 FPC CONN ZIF FOR SMT ST -LEAD FREE-		
	10 OVER 30 UNDER ±0.25	CHECKED BY K.TOYODA DATE '05/07/21			
	30 OVER ±0.3	APPROVED BY N.UKITA DATE '05/07/21	molex MOLEX INCORPORATED		
	ANGULAR ±3 °	MATERIAL NO. SEE TABLE	DOCUMENT NO. SD-52610-036	SHEET NO. 1 OF 2	
	DRAFT WHERE APPLICABLE MUST REMAIN WITHIN DIMENSIONS	SIZE A3	THIS DRAWING CONTAINS INFORMATION THAT IS PROPRIETARY TO MOLEX INCORPORATED AND SHOULD NOT BE USED WITHOUT WRITTEN PERMISSION		

REV F DESCRIPTION

tb_frame_A3_J_ME_S
Rev. D 2004/04/02

EN-02JA(021)

Downloaded from Elcodis.com electronic components distributor

注記(NOTES):

1. 材料(MATERIAL)
   ハウジング(HOUSING):46NYLON ,UL94V-0
   アクチュエータ(ACTUATOR):PPS ,UL94V-0
   ターミナル(TERMINAL):リン青銅(t0.32)
   PHOS-BRO
   接点部: 金メッキ 0.1μm 以上
   テール部: 錫メッキ 1μm 以上
   下地: ニッケルメッキ 1μm 以上
   CONTACT : GOLD 0.1 MICROMETER MINIMUM
   TAIL : MATTE TIN 1 MICROMETER MINIMUM
   NICKEL : UNDER 1 MICROMETER MINIMUM

2. エンボステープ梱包時は、アクチュエータがロックした状態とする。
   IN THE PACKAGE ,ACTUATOR OF PART NO.52610-**59 SHOULD BE LOCKED.

3. ソルダーテール半田付け面のズレ量は、基準面 F に対し上方向 0.05 MAX.
   下方向 0.15 MAX.とする。
   MISALIGNMENT OF SOLDER TAILS FROM F UPPER DIRECTION : 0.05 MAX.,
   LOWER DIRECTION : 0.15 MAX.

4. 偶数極に適用。
   APPLY FOR EVEN CIRCUIT.

5. 本製品は 52610 シリーズの接点金メッキ品である.
   THIS PRODUCT IS Au-CONTACT OF 52610 SERIES.

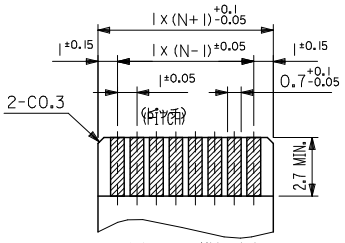

適合FPC推奨寸法
APPLICABLE FPC RECOMMENDED DIM.

仕上がり厚さ(THICKNESS):0.3±0.05

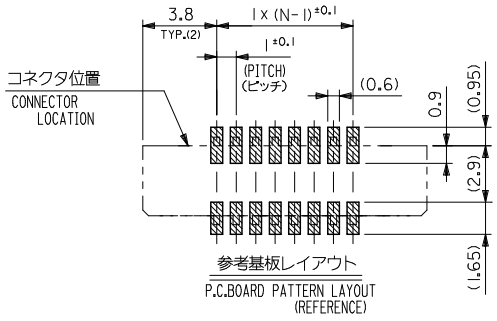

参考基板レイアウト
P.C.BOARD PATTERN LAYOUT
(REFERENCE)

36.6	34.85	31.2	29	52610-3077	52610-3072	52610-3015	30
32.6	30.85	27.2	25	52610-2677	52610-2672	52610-2615	26
31.6	29.85	26.2	24	52610-2577	52610-2572	52610-2515	25
30.6	28.85	25.2	23	52610-2477	52610-2472	52610-2415	24
28.6	26.85	23.2	21	52610-2277	52610-2272	52610-2215	22
26.6	24.85	21.2	19	52610-2077	52610-2072	52610-2015	20
24.6	22.85	19.2	17	52610-1877	52610-1872	52610-1815	18
23.6	21.85	18.2	16	52610-1777	52610-1772	52610-1715	17
22.6	20.85	17.2	15	52610-1677	52610-1672	52610-1615	16
21.6	19.85	16.2	14	52610-1577	52610-1572	52610-1515	15
20.6	18.85	15.2	13	52610-1477	52610-1472	52610-1415	14
19.6	17.85	14.2	12	52610-1377	52610-1372	52610-1315	13
18.6	16.85	13.2	11	52610-1277	52610-1272	52610-1215	12
17.6	15.85	12.2	10	52610-1177	52610-1172	52610-1115	11
16.6	14.85	11.2	9	52610-1077	52610-1072	52610-1015	10
15.6	13.85	10.2	8	52610-0977	52610-0972	52610-0915	9
14.6	12.85	9.2	7	52610-0877	52610-0872	52610-0815	8
12.6	10.85	7.2	5	52610-0677	52610-0672	52610-0615	6
11.6	9.85	6.2	4	52610-0577	52610-0572	52610-0515	5
52610-**15	D	(C)	B	(A)	EMBOSSED TAPE (HIGH BARRIER PKG)	EMBOSSED TAPE	MATERIAL. NO.	極数 CKT.
MODEL NO.					ORDER No. オーダー番号			

REVISED
EC NO: J2009-2316 2009/04/20
DRWN:CARIZONO 2009/04/20
CHKD:T.HARUYAMA 2009/04/21
APPR:NUKITA 2009/04/21
DESCRIPTION
REV F

GENERAL TOLERANCES (UNLESS SPECIFIED)

10 UNDER	±0.2
10 OVER 30 UNDER	±0.25
30 OVER	±0.3
ANGULAR	±3 °

DRAFT WHERE APPLICABLE MUST REMAIN WITHIN DIMENSIONS

DIMENSION STYLE: MM ONLY
SCALE: ---
DESIGN UNITS: METRIC
THIRD ANGLE PROJECTION

DRAWN BY: M.NABEI DATE: '05/07/21
CHECKED BY: K.TOYODA DATE: '05/07/21
APPROVED BY: N.UKITA DATE: '05/07/21

TITLE: 1.0 FPC CONN ZIF FOR SMT ST -LEAD FREE-

molex MOLEX INCORPORATED

MATERIAL NO.: SEE TABLE
DOCUMENT NO.: SD-52610-036
SHEET NO.: 2 OF 2
SIZE: A3

THIS DRAWING CONTAINS INFORMATION THAT IS PROPRIETARY TO MOLEX INCORPORATED AND SHOULD NOT BE USED WITHOUT WRITTEN PERMISSION

Downloaded from Elcodis.com electronic components distributor

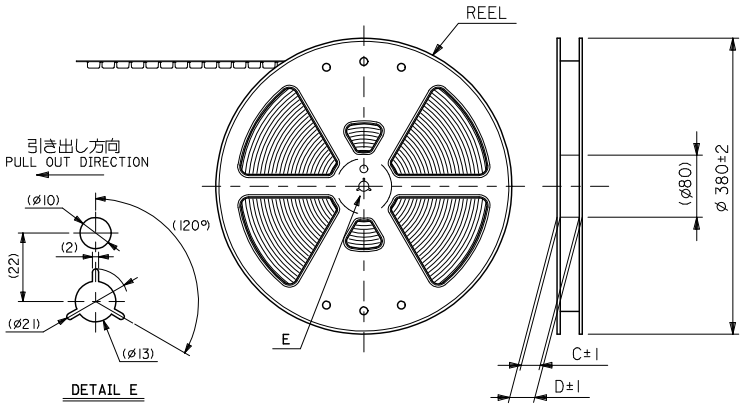

DETAIL E

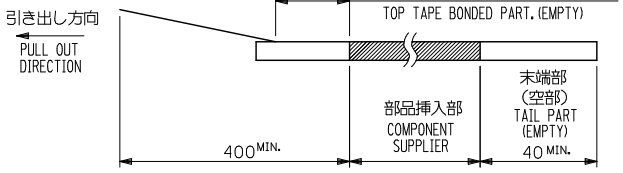

NOTES

1. 梱包数量：１０００個／リール
   NUMBER OF CONNECTORS : 1000PCS/REEL
2. リードテープ長さ LEAD TAPE LENGTH
3. 52610-**15 のアクチュエータはハウジング内に押し下げた状態とする。
   詳細寸法については図面 SD-52610-036 を参照下さい。
   ACTUATOR OF PART NO. 52610-**15 SHULD BE LOCKED.
   RE DETAILED DIMENSIONS , SEE SD-52610-036.
4. 材料(MATERIAL)
   キャリアテープ(CARRIER TAPE)：ポリプロピレン(POLYPROPYLENE)
   トップテープ(TOPTAPE)：PET , PE , PEF
   リール(REEL)：ポリスチレン（PS）<リサイクル材を含む>
   POLYSTYRENE(PS) <RECYCLE MATERIAL CONTAINED>
5. 本製品は 52610 シリーズの接点金メッキ品である。
   THIS PRODUCT IS Au-CONTACT OF 52610 SERIES.
6. 本製品は乾燥剤入り、ハイバリア梱包仕様である。
   THIS PRODUCT IS HIGH BARRIER PACKAGE WITH DESICCANT.

REVISED				
REV	DESCRIPTION			
E	EC NO: J2009-2061	DRWN:TKON	CHKD:MATSUMOTO	APPR:NUKITA
		2009/05/20	2009/05/21	2009/05/21

GENERAL TOLERANCES (UNLESS SPECIFIED)

10 UNDER	±0.2
10 OVER 30 UNDER	±0.25
30 OVER	±0.3
ANGULAR	±3 °

DRAFT WHERE APPLICABLE MUST REMAIN WITHIN DIMENSIONS

DIMENSION STYLE: MM ONLY	SCALE: ---	DESIGN UNITS: METRIC	THIRD ANGLE PROJECTION
DRAWN BY: M.NABEI	DATE: '05/07/21	TITLE: 1.0 FPC CONN SMT ZIF EMBSTP PKG -LEAD FREE-	
CHECKED BY: K.TOYODA	DATE: '05/07/21		
APPROVED BY: N.UKITA	DATE: '05/07/21	molex MOLEX INCORPORATED	
MATERIAL NO.: SEE TABLE		DOCUMENT NO.: SD-52610-037	SHEET NO.: 1 OF 5
SIZE: A3		THIS DRAWING CONTAINS INFORMATION THAT IS PROPRIETARY TO MOLEX INCORPORATED AND SHOULD NOT BE USED WITHOUT WRITTEN PERMISSION	

52610-**72 | MODEL NO.

tb_frame_A3_J_ME_S
Rev. E 2006/04/15

EN-02JA(021)

Downloaded from Elcodis.com electronic components distributor

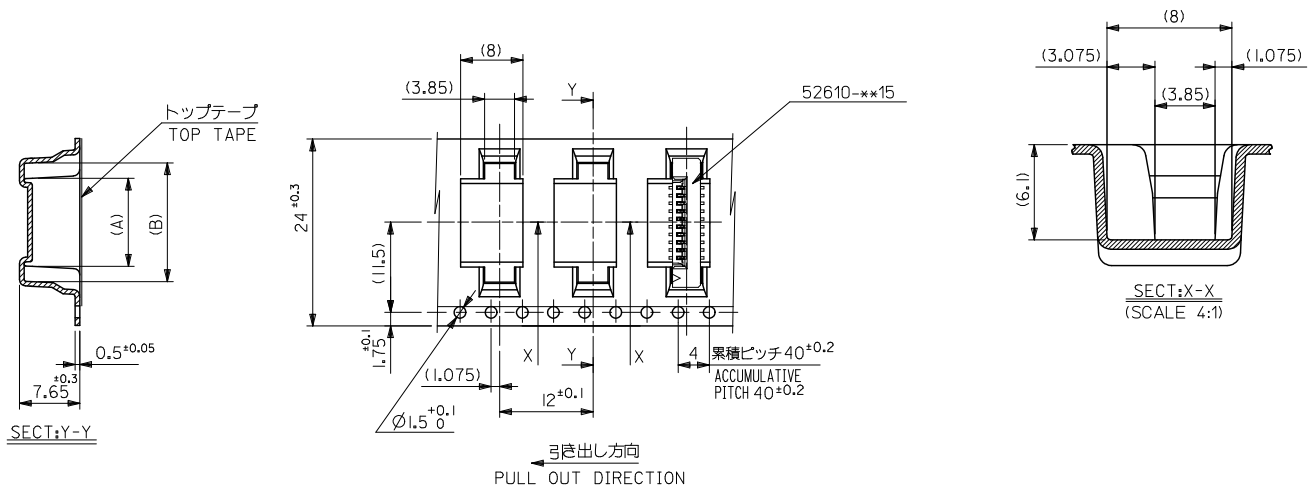

MODEL NO.	キャリアテープ幅 CARRIER TAPE WIDTH	D	C	(B)	(A)	MATERIAL. NO.	極数 CKT.
52610-**72	24	29.4	25.4	15.25	11.32	52610-1072	10
				14.25	10.32	52610-0972	9
				13.25	9.32	52610-0872	8
				11.25	7.32	52610-0672	6
				10.25	6.32	52610-0572	5

REVISED
EC NO: J2009-2061
DRWN:TKON 2009/05/20
CHKD:HMATSUMOTO 2009/05/21
APPR:NUKITA 2009/05/21
E

REV	DESCRIPTION	
	GENERAL TOLERANCES (UNLESS SPECIFIED)	
	10 UNDER	±0.2
	10 OVER 30 UNDER	±0.25
	30 OVER	±0.3
	ANGULAR	±3 °
	DRAFT WHERE APPLICABLE MUST REMAIN WITHIN DIMENSIONS	

DIMENSION STYLE: MM ONLY
SCALE: ---
DESIGN UNITS: METRIC
THIRD ANGLE PROJECTION

DRAWN BY: M.NABEI DATE: '05/07/21
CHECKED BY: K.TOYODA DATE: '05/07/21
APPROVED BY: N.UKITA DATE: '05/07/21

TITLE: 1.0 FPC CONN SMT ZIF EMBSTP PKG -LEAD FREE-

molex MOLEX INCORPORATED

MATERIAL NO.: SEE TABLE
DOCUMENT NO.: SD-52610-037
SHEET NO.: 2 OF 5
SIZE: A3

THIS DRAWING CONTAINS INFORMATION THAT IS PROPRIETARY TO MOLEX INCORPORATED AND SHOULD NOT BE USED WITHOUT WRITTEN PERMISSION

tb_frame_A3_J_ME_S
Rev. E 2006/04/15

EN-02JA(021)

Downloaded from Elcodis.com electronic components distributor

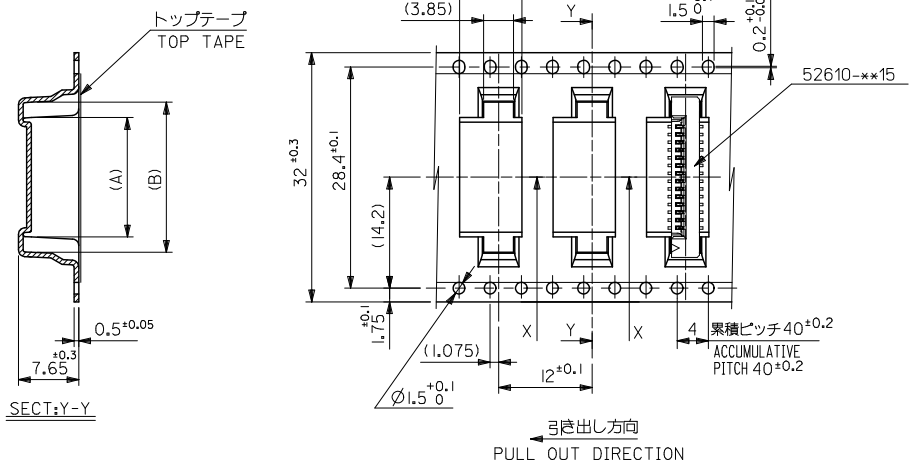

32	37.4	33.4	20.25	16.32	52610-1572	15
			19.25	15.32	52610-1472	14
			18.25	14.32	52610-1372	13
			17.25	13.32	52610-1272	12
			16.25	12.32	52610-1172	11
キャリアテープ幅 CARRIER TAPE WIDTH	D	C	(B)	(A)	MATERIAL. NO.	極数 CKT.

52610-**72
MODEL NO.

REVISED
EC NO: J2009-2061 2009/05/20
DRWN:TKON 2009/05/21
CHKD:HMATSUMOTO 2009/05/21
APPR:NUKITA 2009/05/21
REV. E DESCRIPTION

GENERAL TOLERANCES (UNLESS SPECIFIED)

10 UNDER	±0.2
10 OVER 30 UNDER	±0.25
30 OVER	±0.3
ANGULAR	±3 °

DRAFT WHERE APPLICABLE MUST REMAIN WITHIN DIMENSIONS

DIMENSION STYLE: MM ONLY
SCALE: ---
DESIGN UNITS: METRIC
THIRD ANGLE PROJECTION

DRAWN BY	M.NABEI	DATE '05/07/21
CHECKED BY	K.TOYODA	DATE '05/07/21
APPROVED BY	N.UKITA	DATE '05/07/21

TITLE: 1.0 FPC CONN SMT ZIF EMBSTP PKG -LEAD FREE-

molex MOLEX INCORPORATED

MATERIAL NO.: SEE TABLE
DOCUMENT NO.: SD-52610-037
SHEET NO.: 3 OF 5
SIZE: A3

THIS DRAWING CONTAINS INFORMATION THAT IS PROPRIETARY TO MOLEX INCORPORATED AND SHOULD NOT BE USED WITHOUT WRITTEN PERMISSION

Downloaded from Elcodis.com electronic components distributor

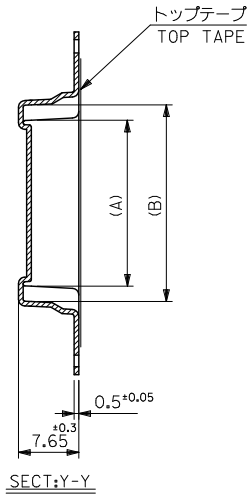

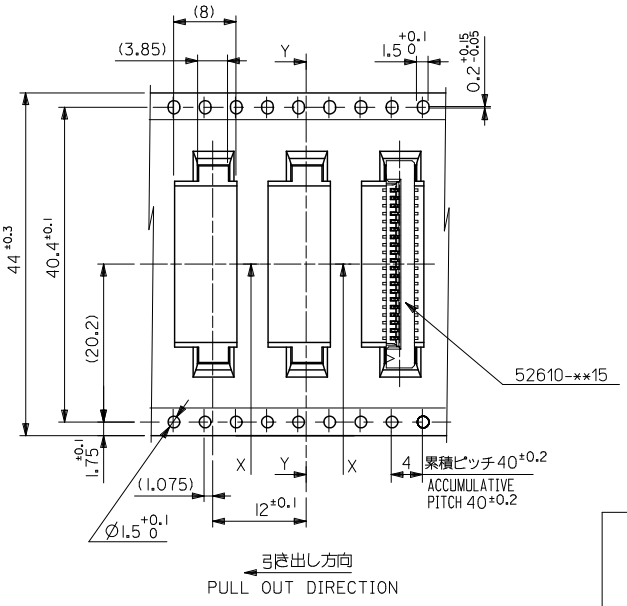

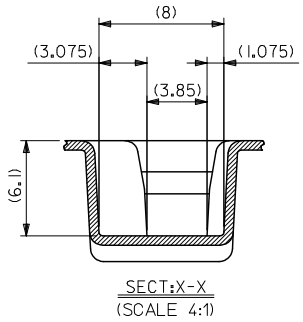

44	49.4	45.4	31.25	27.32	52610-2672	26
			30.25	26.32	52610-2572	25
			29.25	25.32	52610-2472	24
			27.25	23.32	52610-2272	22
			25.25	21.32	52610-2072	20
			23.25	19.32	52610-1872	18
			22.25	18.32	52610-1772	17
			21.25	17.32	52610-1672	16
52610-**72						
MODEL NO.	キャリアテープ幅 CARRIER TAPE WIDTH	D	C	(B)	(A)	MATERIAL NO.	極数 CKT.

REVISED
E EC NO: J2009-2061 2009/05/20
DRWN:TKON 2009/05/21
CHKD:HMATSUMOTO
APPR:NUKITA 2009/05/21
REV DESCRIPTION

GENERAL TOLERANCES (UNLESS SPECIFIED)

10 UNDER	±0.2
10 OVER 30 UNDER	±0.25
30 OVER	±0.3
ANGULAR	±3 °

DRAFT WHERE APPLICABLE MUST REMAIN WITHIN DIMENSIONS

DIMENSION STYLE: MM ONLY
SCALE: ---
DESIGN UNITS: METRIC
THIRD ANGLE PROJECTION

DRAWN BY: M.NABEI DATE: '05/07/21
CHECKED BY: K.TOYODA DATE: '05/07/21
APPROVED BY: N.UKITA DATE: '05/07/21

TITLE: 1.0 FPC CONN SMT ZIF EMBOSTP PKG -LEAD FREE-

molex MOLEX INCORPORATED

MATERIAL NO.: SEE TABLE
DOCUMENT NO.: SD-52610-037
SHEET NO.: 4 OF 5

SIZE A3

THIS DRAWING CONTAINS INFORMATION THAT IS PROPRIETARY TO MOLEX INCORPORATED AND SHOULD NOT BE USED WITHOUT WRITTEN PERMISSION

Downloaded from Elcodis.com electronic components distributor

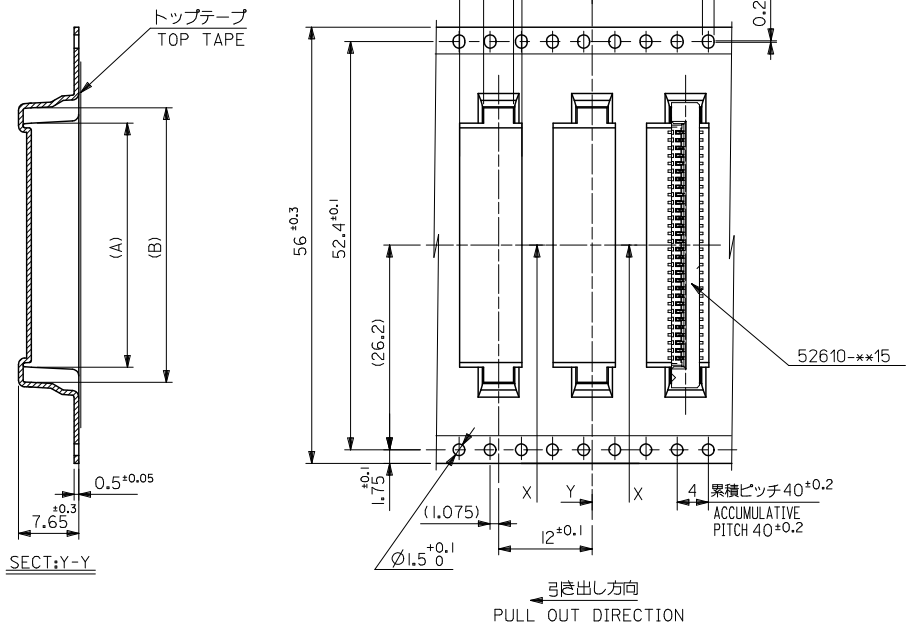

MODEL NO.	キャリアテープ幅 CARRIER TAPE WIDTH	D	C	(B)	(A)	MATERIAL. NO.	極数 CKT.
52610-**72	56	61.4	57.4	35.25	31.32	52610-3072	30

REVISED
EC NO: J2009-2061 2009/05/20
DRWN:TKON 2009/05/21
CHKD:HMATSUMOTO 2009/05/21
APPR:NUKITA 2009/05/21
REV E DESCRIPTION

GENERAL TOLERANCES (UNLESS SPECIFIED)

10 UNDER	±0.2
10 OVER 30 UNDER	±0.25
30 OVER	±0.3
ANGULAR	±3 °

DRAFT WHERE APPLICABLE MUST REMAIN WITHIN DIMENSIONS

DIMENSION STYLE: MM ONLY
SCALE: ---
DESIGN UNITS: METRIC
THIRD ANGLE PROJECTION

DRAWN BY: M.NABEI DATE: '05/07/21
CHECKED BY: K.TOYODA DATE: '05/07/21
APPROVED BY: N.UKITA DATE: '05/07/21

TITLE: 1.0 FPC CONN SMT ZIF EMBSTP PKG -LEAD FREE-

molex MOLEX INCORPORATED

MATERIAL NO.: SEE TABLE
DOCUMENT NO.: SD-52610-037
SHEET NO.: 5 OF 5

SIZE A3

THIS DRAWING CONTAINS INFORMATION THAT IS PROPRIETARY TO MOLEX INCORPORATED AND SHOULD NOT BE USED WITHOUT WRITTEN PERMISSION

Downloaded from Elcodis.com electronic components distributor