KBP005 thru KBP10
RS2005 thru RS210

SINGLE-PHASE SILICON BRIDGE

CHENG-YI
ELECTRONIC

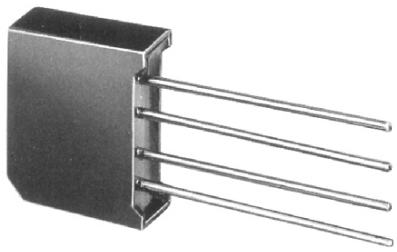

VOLTAGE RANGE
50 TO 1000 VOLTS
CURRENT
2.0 Amperes

KBP

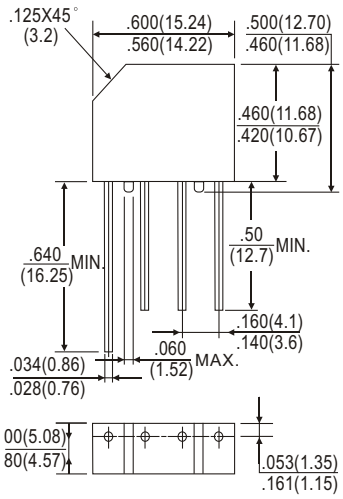

Dimensions in inches and (millimeters)

FEATURES

- UL recognized file # E149311
- Surge overload ratings-50 amperes peak
- Ideal for printed circuit board
- Plastic material has Underwriters Labooratory Flammability Classification 94V-O
- Mounting position: Any
- Lead: Silver Plated Cooper Lead.
- Electrically isolated base-1800Volts

MAXIMUM RATINGS AND ELECTRICAL CHARACTERISTICS

Ratings at 25°C ambient temperature unless otherwise specified.
Resistive or inductive load, 60 Hz.
For capacitive load, derate current by 20%.

		RS2005	RS201	RS202	RS204	RS206	RS208	RS210	UNITS
		KBP005	KBP01	KBP02	KBP04	KBP06	KBP08	KBP10	
Maximum Recurrent Peak Reverse Voltage	V_{RRM}	50	100	200	400	600	800	1000	V
Maximum RMS Bridge Input Voltage	V_{RMS}	35	70	140	280	420	560	700	V
Maximum DC Blocking Voltage	V_{DC}	60	100	200	400	600	800	1000	V
Maximum Average Forward Output Current @ T_A=25°C	$V_{(AV)}$	2.0							A
Peak Forward Surge Current 8.3 ms single half sine-wave superimposed on rated load	I_{FSM}	50							A
Maximum DC Forward Voltage drop per element at 1.0A DC	V_F	1.1							V
Maximum DC Reverse Current at rated DC Blocking Voltage Per Element @ T_A=25°C @ T_A=100°C	I_R	10 1							μA mA
I^2t Rating for fusing(t<8.3ms)	I^2t	10							A^2S
Operating Temperature Range	T_J	-55 to +125							°C
Storage Temperature Range	T_{STG}	-55 to +150							°C

KBP005 thru KBP10
RS2005 thru RS210

SINGLE-PHASE SILICON BRIDGE

CHENG-YI ELECTRONIC

RATING AND CHARACTERISTICS CURVES
KBP005 THRU KBP10
RS2005 THRU RS210

Fig. 1 - DERATING CURVE FOR OUTPUT RECTIFIED CURRENT

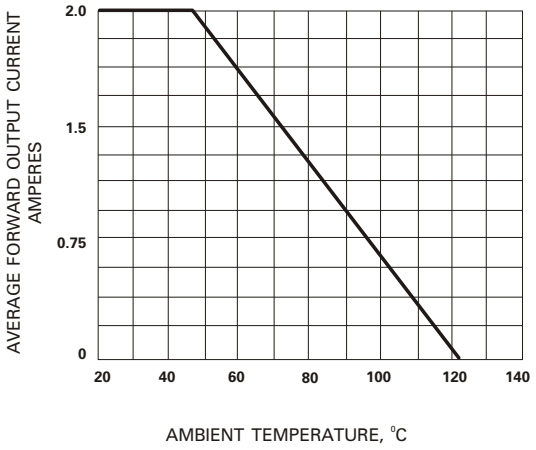

Fig. 2 - DERATING CURVE FOR OUTPUT RECTIFIED CURRENT

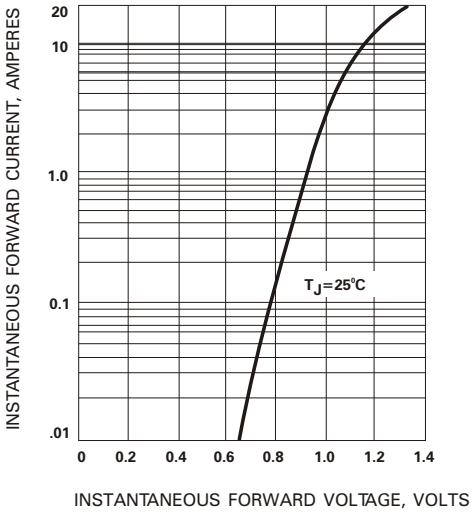

Fig. 3 - TYPICAL FORWARD CHARACTERISTICS

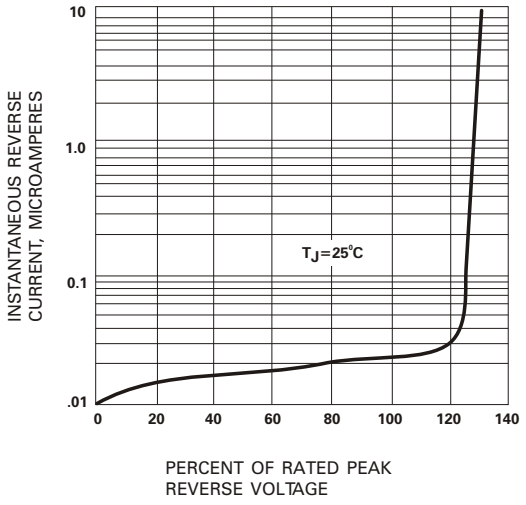

Fig. 4 - MAXIMUM FORWARD SURGE CURRENT