Part	L (μH)	Tol %	R_{DC} MAX (Ω)	I_{DC} I_N (mA)
CDRH3D16-1R5	1.5 @ 100KHz	N	43	1550
CDRH3D16-2R2	2.2 @ 100KHz	N	50	1200
CDRH3D16-3R3	3.3 @ 100KHz	N	63	1100
CDRH3D16-4R7	4.7 @ 100KHz	N	80	900
CDRH3D16-6R8	6.8 @ 100KHz	N	95	730
CDRH3D16-100	10 @ 100KHz	N	160	550
CDRH3D16-150	15 @ 100KHz	N	230	420
CDRH3D16-220	22 @ 100KHz	N	350	350
CDRH3D16-330	33 @ 100KHz	N	470	320

SPECIFICATION

TYPE = CDRH3D16
CONSTRUCTION = SURFACE MOUNT POWER INDUCTOR
TERIMAL COATING = NICKEL / SILVER
OPERATING TEMP. = -40 TO +85˚C
STORAGE TEMP = -55 TO +125˚C
INSULATION RESISTANCE = 100MOhm. 100V TERMINAL-CORE
DIELECTRIC STREGTH = 250Vac TERMINAL-CORE
HUMIDITY EFFECTS = L ±5 @ 95%RH, 40˚C, 1HR
Q ±5 @ 95%RH, 40˚C, 1HR
PACKAGING = 2000PCS/REEL
MARKING = 3 CHARACTERS, VALUE

NOTE

TOLERANCES L=15%; M=20%; N=30%

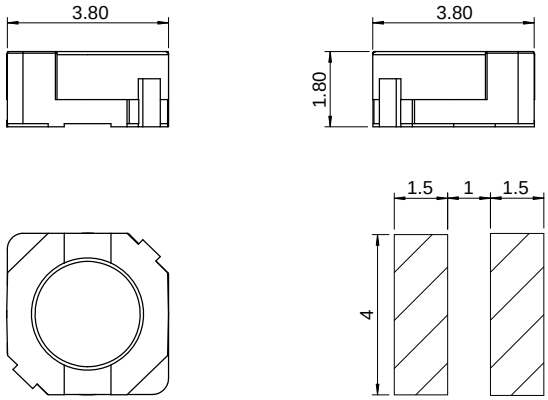

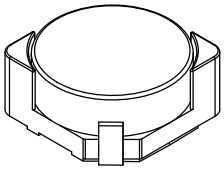

PROPRIETARY AND CONFIDENTIAL
THE INFORMATION CONTAINED IN THIS DRAWING IS THE SOLE PROPERTY OF AIT COMPONENTS LTD. ANY REPRODUCTION IN PART OR AS A WHOLE WITHOUT THE WRITTEN PERMISSION OF AIT COMPONENTS LTD IS STRICTLY PROHIBITED.

MATERIAL --
FINISH --

	NAME	DATE
DRAWN		
CHECKED		
ENG APPR.		

UNLESS OTHERWISE SPECIFIED
DIMENSIONS ARE IN MILLIMETERS
TOLERANCES:
ONE PLACE DECIMAL +/-0.3
TWO PLACE DECIMAL +/-0.13
ANGLE +/-1 DEGREE

DO NOT SCALE DRAWING

AIT COMPONENTS LTD
www.aitcomponents.com

TITLE:
CDRH3D16 SMD
POWER INDUCTOR

SIZE A | DWG. NO. CDRH3D16 SMD POWER INDUCTOR | REV. 00
SCALE:1:1 | SHEET 1 OF 1

Downloaded from Elcodis.com electronic components distributor