3-Cell, High-Efficiency, Step-Up DC/DC Converter

FEATURES

- 4V to 24V Input Voltage Operation.
- Adjustable Output Voltage.
- Low Quiescent Current at 100μA.
- Pulse-Skipping and Pulse-Frequency Modulation Maintain High Efficiency (max. 95%).
- 90KHz to 250KHz Oscillator Frequency.
- Power-Saving Shutdown Mode (8μA Typical).
- Push-Pull Driver Output.

APPLICATIONS

- Flash Memory Programming Power Supply.
- Positive LCD Contrast Bias for Notebook & Palmtop Computers.
- Step-Up DC/DC Converter Module.
- Telecom Power Supply.

DESCRIPTION

The AIC1628 is a high performance step-up DC/DC converter, designed to drive an external power switch to generate programmable positive voltages. In the particularly suitable LCD contrast bias and flash memory programming power supply applications, typical full-load efficiencies are 85% to 95%. 4V to 24V input operation range allows the AIC1628 to be powered directly by the battery pack in the most battery-operated applications for greater efficiency. Output voltage can be scaled to 40V or greater by two external resistors. A Pulse-Frequency Modulation scheme is employed to maintain high efficiency conversion under wide input voltage range. Quiescent current is about 100μA and can be reduced to 8μA in shutdown mode. Switching frequency being around 90KHz to 250KHz range, small size switching components are ideal for battery powered portable equipments, like notebook and palmtop computers.

TYPICAL APPLICATION CIRCUIT

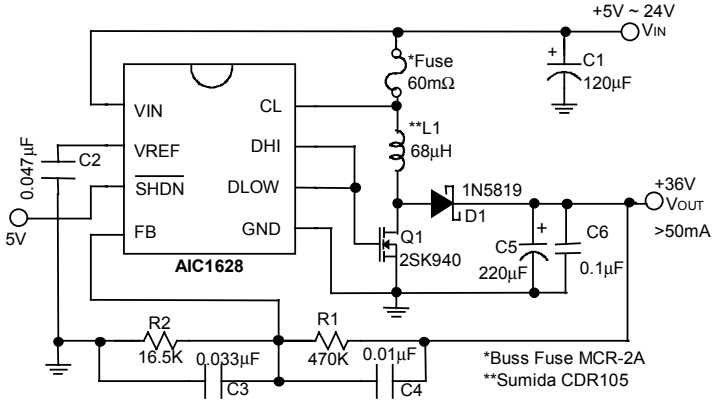

Color LCD Contrast Bias Supply

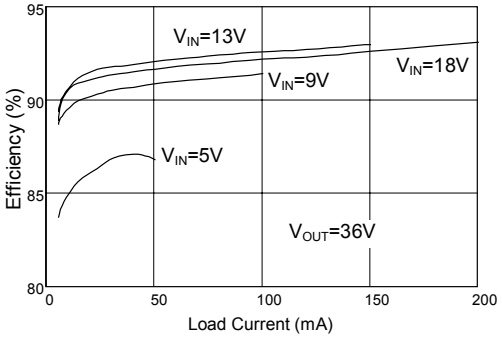

Efficiency vs. Output Current

ORDERING INFORMATION

AIC1628 XX

- PACKAGE TYPE
  N: PLASTIC DIP
  S: SMALL OUTLINE
- TEMPERATURE RANGE
  C=0°C~+70°C

ORDER NUMBER	PIN CONFIGURATION
AIC1628CN (PLASTIC DIP)	TOP VIEW
AIC1628CS (PLASTIC SO)	

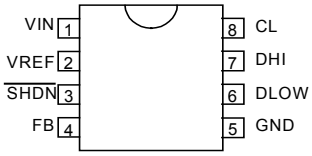

ABSOLUTE MAXIMUM RATINGS

VIN Supply Voltage (V_{IN} Pin) 24V

$\overline{SHDN}$ Pin Voltage 15V

Operating Temperature Range ..... 0°C~70°C

Storage Temperature Range ..... -65°C~ 150°C

TEST CIRCUIT

Refer to Typical Application Circuit

ELECTRICAL CHARACTERISTICS (V_{IN}= 13V, Ta=25°C, unless otherwise specified.)

PARAMETERS	TEST CONDITIONS	MIN.	TYP.	MAX.	UNIT
Input Voltage		4		24	V
Quiescent Current	V_{FB} = 1.5V		100	200	μA
Shutdown Mode Current	$V_{\overline{SHDN}}$ = 0V		8	20	μA
V_{REF} Voltage	I_{SOURCE} = 250μA	1.16	1.22	1.28	V
V_{REF} Source Current		250			μA
DLOW "ON Resistance"			15		Ω
DHI "ON Resistance"			10		Ω
CL Threshold	V_{IN} - V_{CL}	45	60	75	mV
Shutdown Threshold		0.8	1.5	2.4	V
Shutdown Input Leakage Current	$V_{\overline{SHDN}}$ < 15V			1	μA

TYPICAL PERFORMANCE CHARACTERISTICS

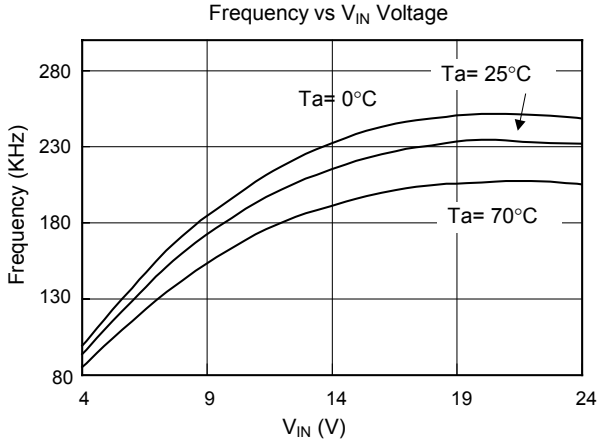

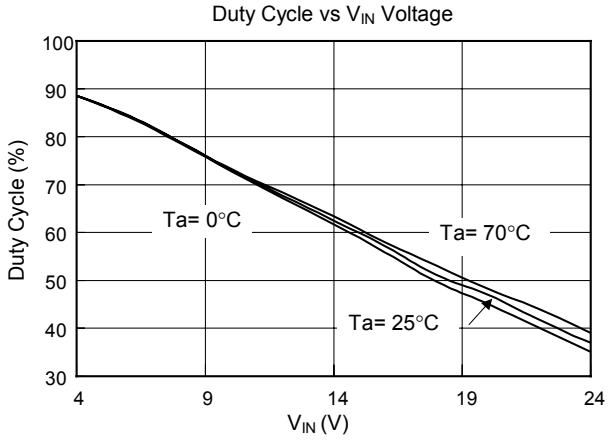

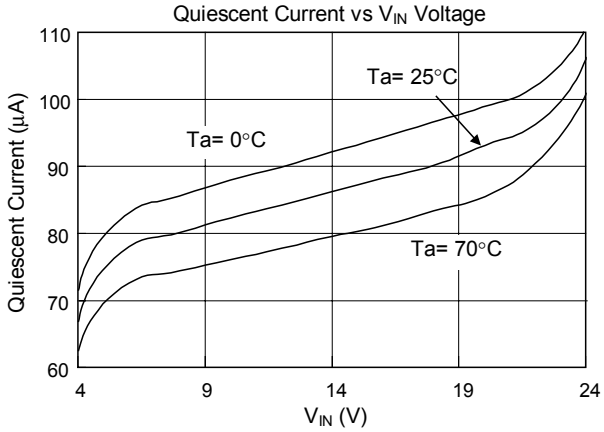

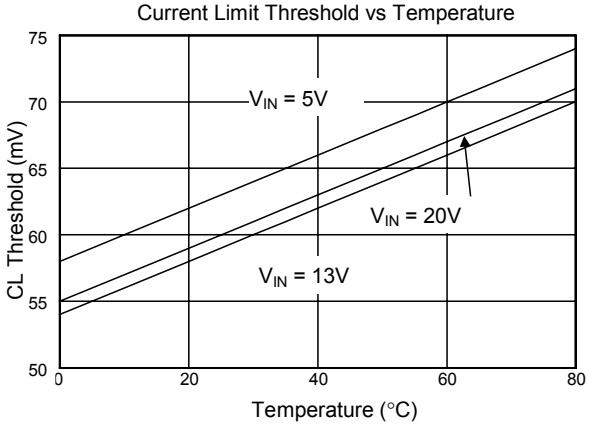

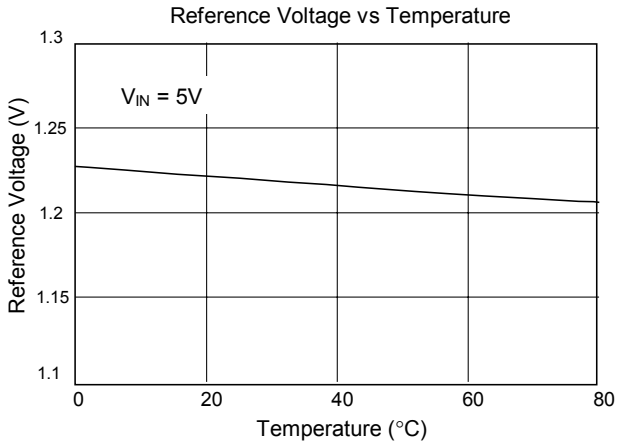

BLOCK DIAGRAM

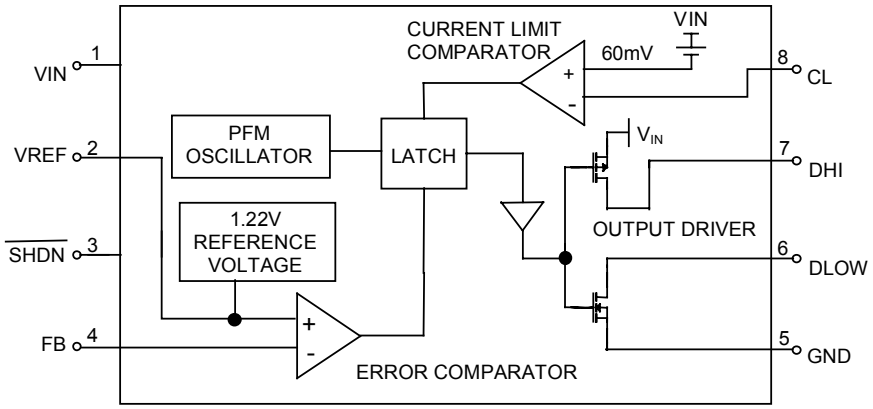

PIN DESCRIPTIONS

PIN 1: VIN - 4V to 24V input supply voltage.

PIN 2: VREF - 1.22V reference output. Bypass with a 0.047µF capacitor to GND. Sourcing capability is guaranteed to be greater than 250µA.

PIN 3: $\overline{\text{SHDN}}$ - Logical input to shutdown the chip.
>1.5V = normal operation,
GND = Shutdown,
Can not be floating or forced greater than 15V. In shutdown mode DLOW and DHI pins are at low level.

PIN 4: FB- Feedback signal input to sense VREF. Connecting a resistance R1 to V_{OUT} and a resistance R2 to GND yields the output voltage:
V_{OUT} = (R1+R2)/R2 x VREF
(Refer to typical application circuit)

PIN 5: GND - Power ground.

PIN 6: DLOW -Driver sinking output. Connected to gate of the external N-channel MOSFET or base of the NPN bipolar transistor.

PIN 7: DHI - Driver sourcing output. Connected to DLOW when using an external N-channel MOSFET. When using an external NPN bipolar transistor, connect a base resistance RB from this pin to DLOW. RB value depends on V_{IN}, inductor and NPN current gain.

PIN 8: CL - Current-limit input. Threshold voltage is 60mV from V_{IN}. This pin clamps the switch peak current to prevent over-current damage to the external switch, under abnormal conditions.

■ APPLICATION EXAMPLES

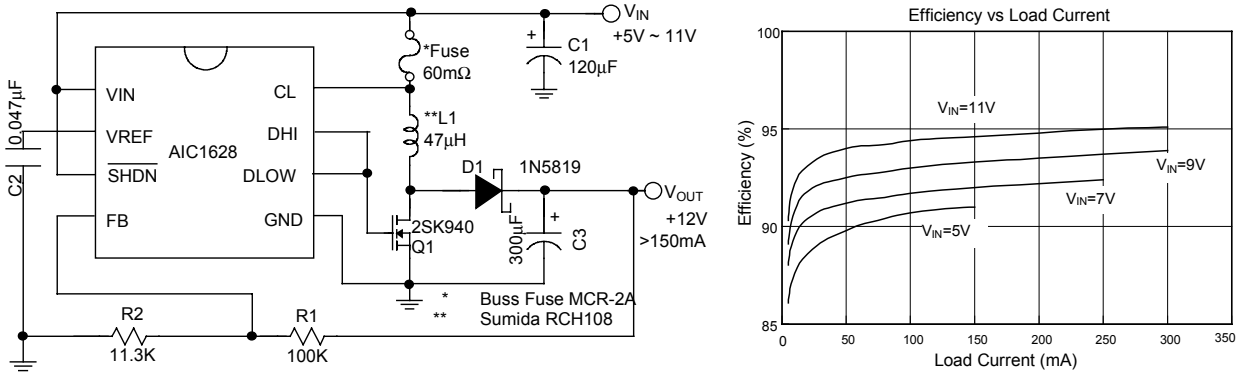

Fig. 1 Flash memory programming supply

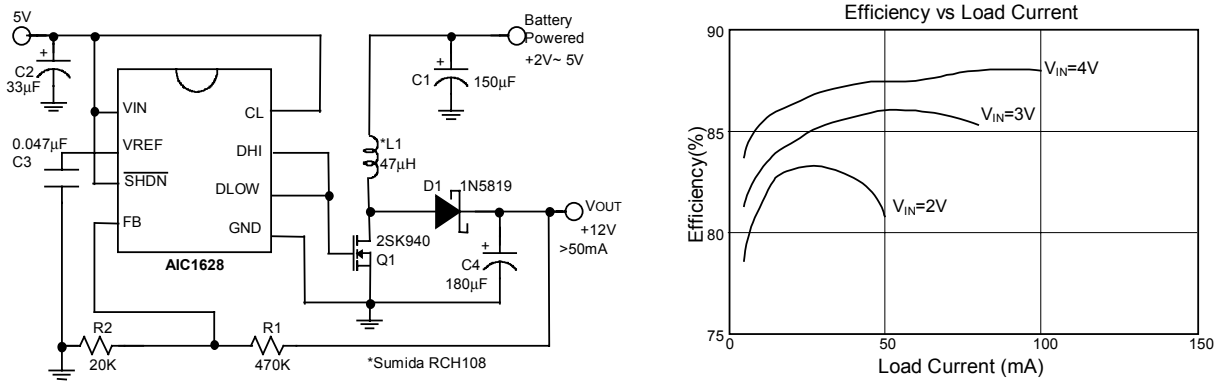

Fig. 2 2-cells to +12V Flash memory programmer

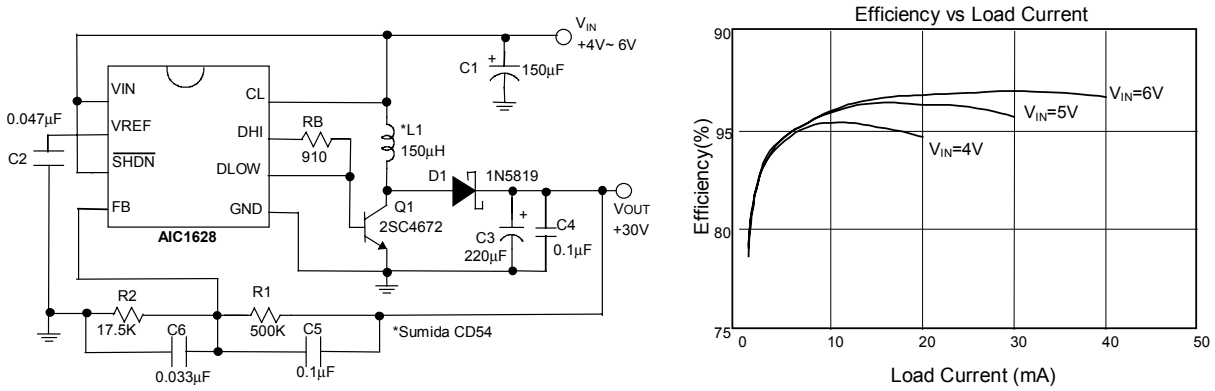

Fig. 3 4-cells to +30V power supply

APPLICATION EXAMPLES (CONTINUED)

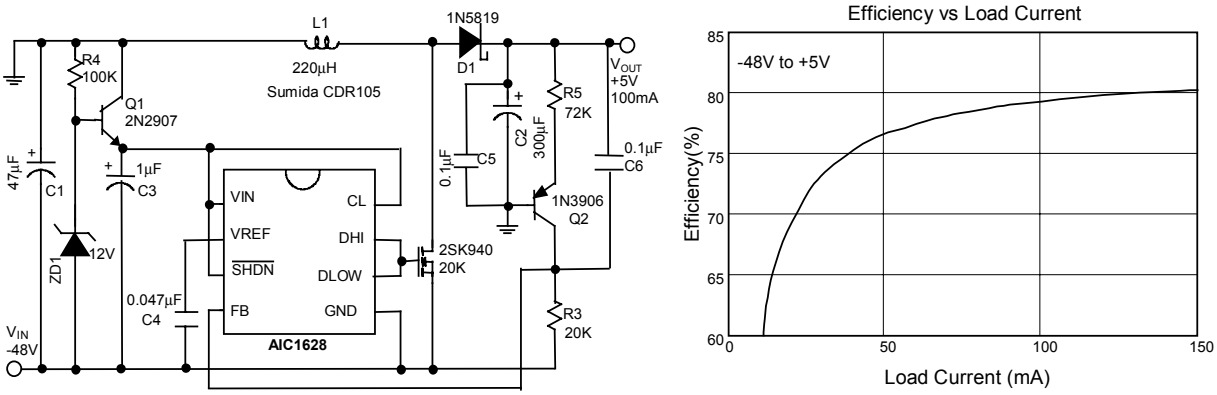

Fig. 4 Telecom +5V supply

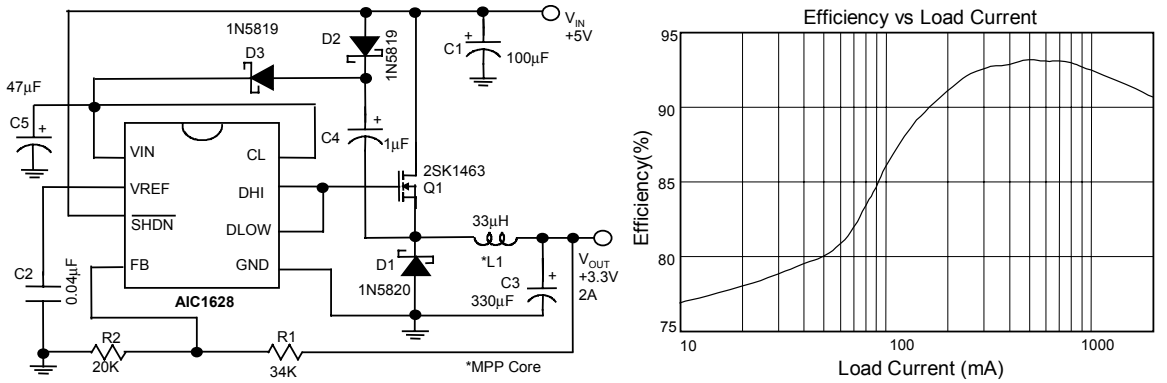

Fig. 5 5V to 3.3V step-down converter

PHYSICAL DIMENSIONS

- **8 LEAD PLASTIC SO (unit: mm)**

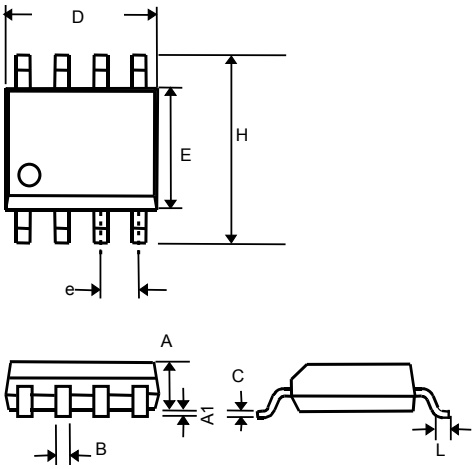

SYMBOL	MIN	MAX
A	1.35	1.75
A1	0.10	0.25
B	0.33	0.51
C	0.19	0.25
D	4.80	5.00
E	3.80	4.00
e	1.27(TYP)	
H	5.80	6.20
L	0.40	1.27

- **8 LEAD PLASTIC DIP (unit: mm)**

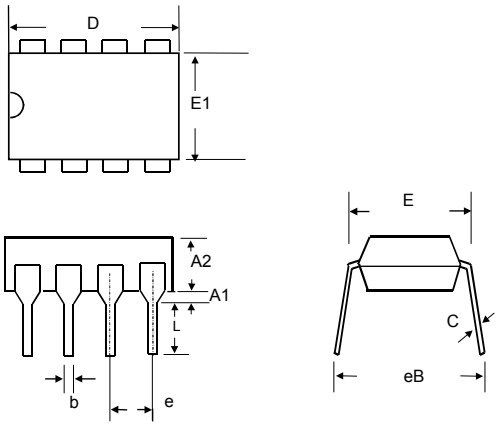

SYMBOL	MIN	MAX
A1	0.381	—
A2	2.92	4.96
b	0.35	0.56
C	0.20	0.36
D	9.01	10.16
E	7.62	8.26
E1	6.09	7.12
e	2.54 (TYP)	
eB	—	10.92
L	2.92	3.81