Description

SE1122 is a low dropout positive fixed-mode regulator with minimum of 1A output current capability. The product is specifically designed to provide well-regulated supply for low voltage IC applications such as high-speed bus termination and low current 1.2V logic supply. SE1122 is also well suited for other applications such as VGA cards. SE1122 is guaranteed to have a typical 1.3V dropout at full load current making it ideal to provide well-regulated outputs of 1.2 output voltage with 2.7V input voltage supply.

Features

- 1.3V typical dropout at full load current
- Fixed 1.2V± 2% output voltage
- Fast transient response
- Output current limiting
- Built-in thermal shutdown
- Good noise rejection
- Rugged 2KV ESD withstand capability.
- Available in SOT223 Packages.
- RoHS Compliant and 100% Lead (Pb)-Free

Pin Configuration

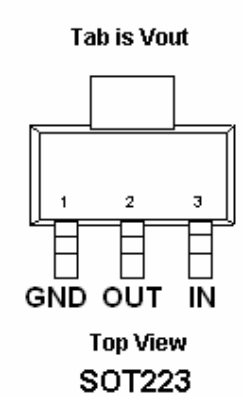

Application

- PC peripheral
- Communication

Ordering Information

Device	Package	V_{OUT}
SE1122	SOT-223 (Lead-free)	Fixed output voltages 1.2V

Typical Application

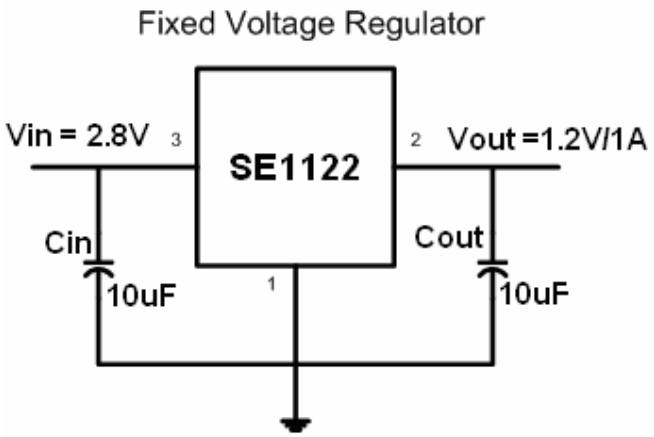

Absolute Maximum Rating

Symbol	Parameter	Maximum	Units
V_{IN}	Input Supply Voltage	12	V
θ_{JA}	Thermal Resistance Junction to Ambient (SOT-223)	60	°C/W
T_J	Operating Junction Temperature Range	0 to 125	°C
T_{STG}	Storage Temperature Range	-40 to 150	°C
T_{LEAD}	Lead Temperature (Soldering 10 Sec)	260	°C

Electrical Characteristic

V_{IN} =2.8V, I_{OUT} = 10mA, C_{IN} = 10μF, C_{OUT} = 10μF, TA = 25°C, unless otherwise specified.

Symbol	Parameter	Test Condition	Min	Typ	Max	Units
V_O	Output Voltage (1)		1.176	1.2	1.224	V
V_{SR}	Line Regulation (1)	2.8V < VIN < 12V	--	0.3	--	%
V_{LR}	Load Regulation (1)	10mA ≤ I_{OUT} ≤ 1A	--	0.5	--	%
Iq	Quiescent Current			1.2		mA
V_D	Dropout Voltage (2)	I_{OUT} = 1A	--	1.3	--	V
I_{CL}	Current Limit		1.1	--	--	A
T_C	Temperature Coefficient		--	0.02	--	%/°C
OTP	Thermal Protection		--	175	--	°C
V_N	RMS Output Noise	T_A = 25°C, 10Hz ≤ f ≤ 10kHz	--	0.003	--	%V_O
R_A	Ripple Rejection Ratio	f = 120Hz, C_{OUT} = 22μF (Tantalum), (V_{IN} - V_{OUT}) = 3V, I_{OUT} = 10mA	--	57	--	dB

Notes:

1. Low duty cycle pulse testing with which T_J remains unchanged.

3. The dropout voltage is the input/output differential at which the circuit ceases to regulate against further reduction in input voltage. It is measured when the output voltage has dropped 2% from the nominal value obtained at V_{IN} = V_{OUT} +Vdropout.

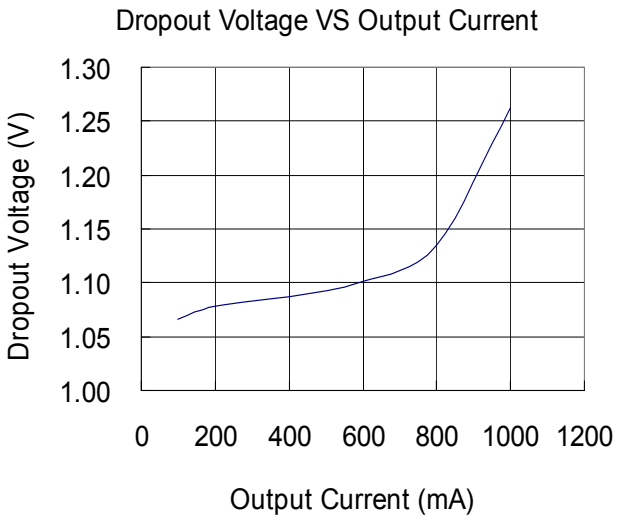

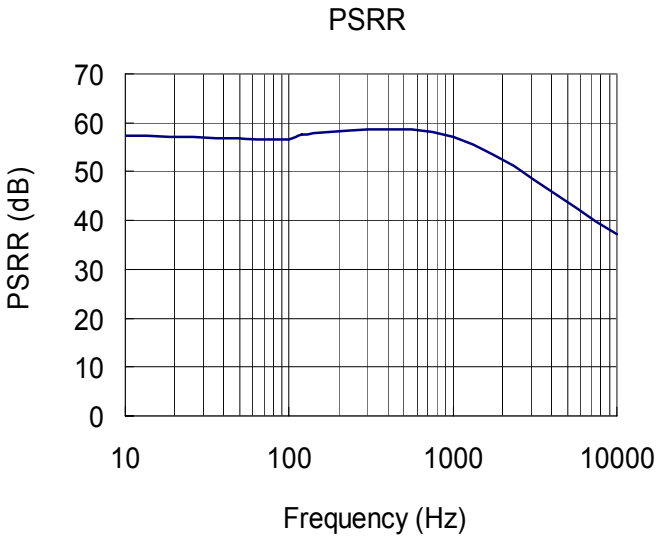

Outline Drawing for SOT-223

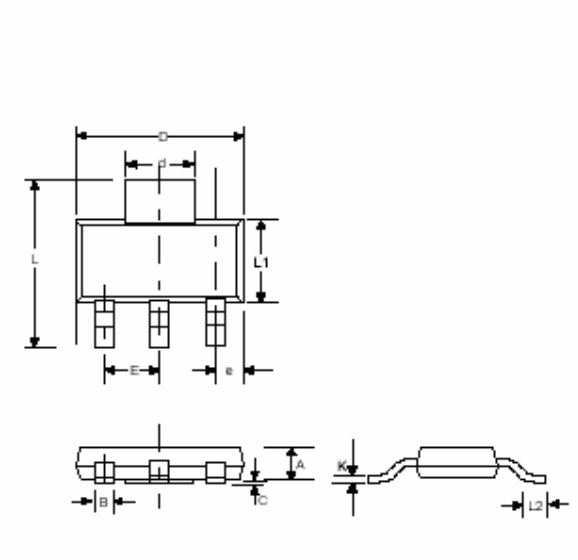

DIMENSIONS				
DIM^N	INCHES		MM	
	MIN	MAX	MIN	MAX
A	—	0.071	—	1.80
B	0.025	0.033	0.640	0.840
C	0.012	—	0.31	—
D	0.248	0.264	6.30	6.71
d	0.115	0.124	2.95	3.15
E	—	0.090	—	2.29
e	0.033	0.041	0.840	1.04
L	0.264	0.287	6.71	7.29
L1	0.130	0.148	3.30	3.71
L2	0.012	—	0.310	—
K	0.010	0.014	0.250	0.360

Customer Support

Seaward Electronics Incorporated – China

Rm 1605, Building 1, International Pioneering Park, #1 Shangdi Xinxi Rd

Haidian District, Beijing 100085, China

Tel: 86-10-8289-5700/01/05

Fax: 86-10-8289-5706

Seaward Electronics Corporation – Taiwan

2F, #181, Sec. 3, Minquan East Rd,

Taipei, Taiwan R.O.C

Tel: 886-2-2712-0307

Fax: 886-2-2712-0191

Seaward Electronics Incorporated – North America

1512 Centre Pointe Dr.

Milpitas, CA95035, USA

Tel: 1-408-821-6600

Last Updated - 8/3/2007