EVB71101

315/433MHz Receiver Evaluation Board Description

Features

- ❒ Single-conversion superhet architecture for low external component count
- ❒ FSK for digital data and FM reception for analog signal transmission
- ❒ FSK/FM demodulation with phase-coincidence demodulator
- ❒ Low current consumption in active mode and very low standby current
- ❒ Switchable LNA gain for improved dynamic range
- ❒ RSSI allows signal strength indication and ASK detection

Ordering Information

Part No.

EVB71101-433-FSK-C
EVB71101-433-ASK-C
EVB71101-315-FSK-C
EVB71101-315-ASK-C

Application Examples

- ❒ General digital data transmission
- ❒ Tire Pressure Monitoring Systems (TPMS)
- ❒ Remote Keyless Entry (RKE)
- ❒ Wireless access control
- ❒ Alarm and security systems
- ❒ Garage door openers
- ❒ Remote Controls
- ❑ Home and building automation
- ❒ Low-power telemetry systems

Evaluation Board

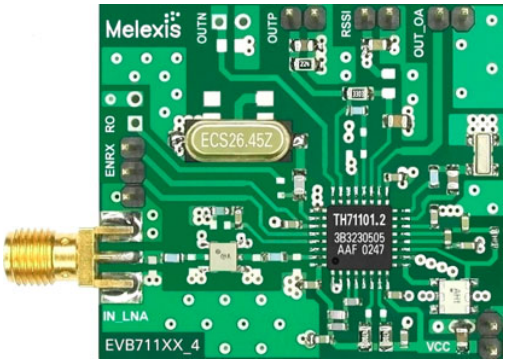

General Description

The TH71101 FSK/FM/ASK single-conversion superheterodyne receiver IC is designed for applications in the European 433 MHz industrial-scientific-medical (ISM) band, according to the EN 300 220 telecommunications standard. It can also be used for any other system with carrier frequencies ranging from 300 MHz to 450 MHz (e.g. for applications to FCC part 15 and ARIB STD-T67).

Downloaded from Elcodis.com electronic components distributor

Document Content

1 Theory of Operation 3
1.1 General 3
1.2 EVB Technical Data Overview 3
1.3 Block Diagram 4
1.4 Mode Configurations 4
1.5 LNA GAIN Control 4
1.6 Frequency Planning 4
1.6.1 Selected Frequency Plans 5
1.6.2 Maximum Frequency Coverage 5
2 Application Circuits 6
2.1 FSK Application Circuit 6
2.1.1 Circuit Diagram for FSK Reception 6
2.1.2 Board Component Values for FSK 7
2.1.3 Component Arrangement Top Side for FSK Reception 8
2.2 ASK Application Circuit 9
2.2.1 Circuit Diagram for ASK Reception 9
2.2.2 Board Component Values for ASK 10
2.2.3 Component Arrangement Top Side for ASK Reception 11
3 Evaluation Board Layouts 12
4 Board Variants 12
5 Package Description 13
5.1 Soldering Information 13
6 Disclaimer 14

Downloaded from Elcodis.com electronic components distributor

1 Theory of Operation

1.1 General

With the TH71101 receiver chip, various circuit configurations can be arranged in order to meet a number of different customer requirements. For FM/FSK reception the IF tank used in the phase coincidence demodulator can also be constituted by a ceramic discriminator with a varactor diode to create an AFC circuit. In ASK configuration, the RSSI signal is fed to an ASK detector, which is constituted by the operational amplifier.

A double-conversion variant, called TH71102, is also available. This receiver IC allows a higher degree of image rejection, achieved in conjunction with an RF front-end filter. Both RXICs have the same die. At the TH71102, the second mixer (MIX2) is used to down-convert the first IF (IF1) to the second IF (IF2). At the TH71101, MIX2 operates as an amplifier.

Efficient RF front-end filtering is realized by using a SAW, ceramic or helix filter in front of the LNA and by adding an LC filter at the LNA output.

The TH71101 receiver IC consists of the following building blocks:

- PLL synthesizer (PLL SYNTH) for generation of the local oscillator signal LO parts of the PLL SYNTH are: the high-frequency VCO1, the feedback divider DIV_16, a phase-frequency detector (PFD) with charge pump (CP) and a crystal-based reference oscillator (RO)
- Low-noise amplifier (LNA) for high-sensitivity RF signal reception
- First mixer (MIX1) for down-conversion of the RF signal to the IF
- IF pre amplifier which is a mixer cell (MIX2) that operates as an amplifier
- IF amplifier (IFA) to amplify and limit the IF signal and for RSSI generation
- Phase coincidence demodulator (DEMOD) with third mixer (MIX3) to demodulate the IF signal
- Operational amplifier (OA) for data slicing, filtering and ASK detection
- Bias circuitry for bandgap biasing and circuit shutdown

1.2 EVB Technical Data Overview

- ❒ Input frequency range: 300 MHz to 450 MHz
- ❒ Power supply range: 2.3 V to 5.5 V @ ASK
  2.7 V to 5.5 V @ FSK
- ❒ Temperature range: -40 °C to +85 °C
- ❒ Standby current: 50 nA
- ❒ Operating current: 6.5 mA @ low gain mode
  8.2 mA @ high gain mode
- ❒ Sensitivity: -110 dBm @ ASK 1)
  -104 dBm @ FSK 2)
- ❒ Range of IF: 400 kHz to 22 MHz
- ❒ Maximum input level: -10 dBm @ ASK
  0 dBm @ FSK
- ❒ Image rejection: > 45 dB (e.g. with 433.92 MHz SAW front-end filter and at 10.7 MHz IF)
- ❒ Spurious emission: < -70 dBm
- ❒ Input frequency acceptance range: up to ±100 kHz
- ❒ RSSI range: 70 dB
- ❒ FM/FSK deviation range: ±2.5 kHz to ±80 kHz
- ❒ Maximum analog modulation frequency: 15 kHz

1) at 4 kbps NRZ, BER = $3 \cdot 10^{-3}$, 180 kHz IF filter BW, incl. 3 dB SAW front-end-filter loss
2) at 4 kbps NRZ, BER = $3 \cdot 10^{-3}$, ± 20 kHz FSK deviation, 180 kHz IF filter BW, incl. 3 dB SAW front-end-filter loss

For more detailed information, please refer to the latest TH71101 data sheet revision

Downloaded from Elcodis.com electronic components distributor

1.3 Block Diagram

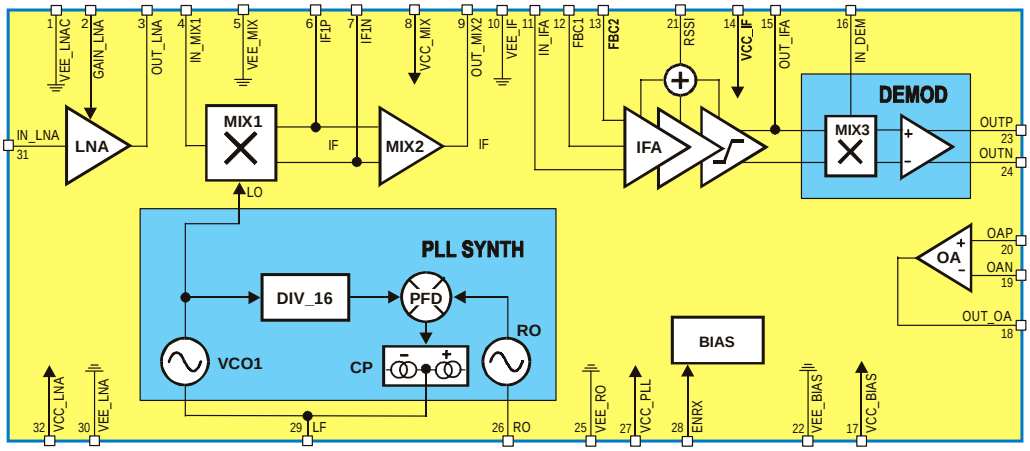

Fig. 1: TH71101 block diagram

1.4 Mode Configurations

ENRX	Mode	Description
0	RX standby	RX disabled
1	RX active	RX enable

Note: ENRX are pulled down internally

1.5 LNA GAIN Control

V_{GAIN_LNA}	Mode	Description
< 0.8 V	HIGH GAIN	LNA set to high gain
> 1.4 V	LOW GAIN	LNA set to low gain

Note: hysteresis between gain modes to ensure stability

1.6 Frequency Planning

Frequency planning is straightforward for single-conversion applications because there is only one IF that can be chosen, and then the only possible choice is low-side or high-side injection of the LO signal (which is now the one and only LO signal in the receiver).

The receiver's single-conversion architecture requires careful frequency planning. Besides the desired RF input signal, there are a number of spurious signals that may cause an undesired response at the output. Among them is the image of the RF signal that must be suppressed by the RF front-end filter.

Downloaded from Elcodis.com electronic components distributor

By using the internal PLL synthesizer of the TH71101 with the fixed feedback divider ratio of N = 16 (DIV_16), two types of down-conversion are possible: low-side injection of LO and high-side injection of LO. The following table summarizes some equations that are useful to calculate the crystal reference frequency (REF) and the LO frequency, for a given RF and IF.

Injection type	low	high
REF	(RF – IF)/16	(RF + IF)/16
LO	16 • REF	16 • REF
IF	RF – LO	LO – RF
RF image	RF – 2IF	RF + 2IF

1.6.1 Selected Frequency Plans

The following table depicts crystal, LO and image signals considering the examples of 315 MHz and 433.92 MHz RF reception at IF = 10.7 MHz.

Signal type	RF = 315 MHz	RF = 315 MHz	RF = 433.92 MHz	RF = 433.92 MHz
Injection type	low	**high**	**low**	high
REF / MHz	19.01875	**20.35625**	**26.45125**	27.78875
LO / MHz	304.3	**325.7**	**423.22**	444.62
RF image / MHz	293.6	**336.4**	**412.52**	455.32

The selection of the reference crystal frequency is based on some assumptions. As for example: the image frequency should not be in a radio band where strong interfering signals might occur (because they could represent parasitic receiving signals), the LO signal should be in the range of 300 MHz to 450 MHz (because this is the optimum frequency range of the VCO1). Furthermore the IF should be as high as possible to achieve highest RF image rejection. The columns in bold depict the selected frequency plans to receive at 315 MHz and 433.92 MHz, respectively.

1.6.2 Maximum Frequency Coverage

Parameter	f_{min}	f_{max}
Injection type	high	low
RF / MHz	289.3	460.7
REF / MHz	18.75	28.125
LO / MHz	300	450
IF/ MHz	10.7	10.7

Downloaded from Elcodis.com electronic components distributor

2 Application Circuits

2.1 FSK Application Circuit

2.1.1 Circuit Diagram for FSK Reception

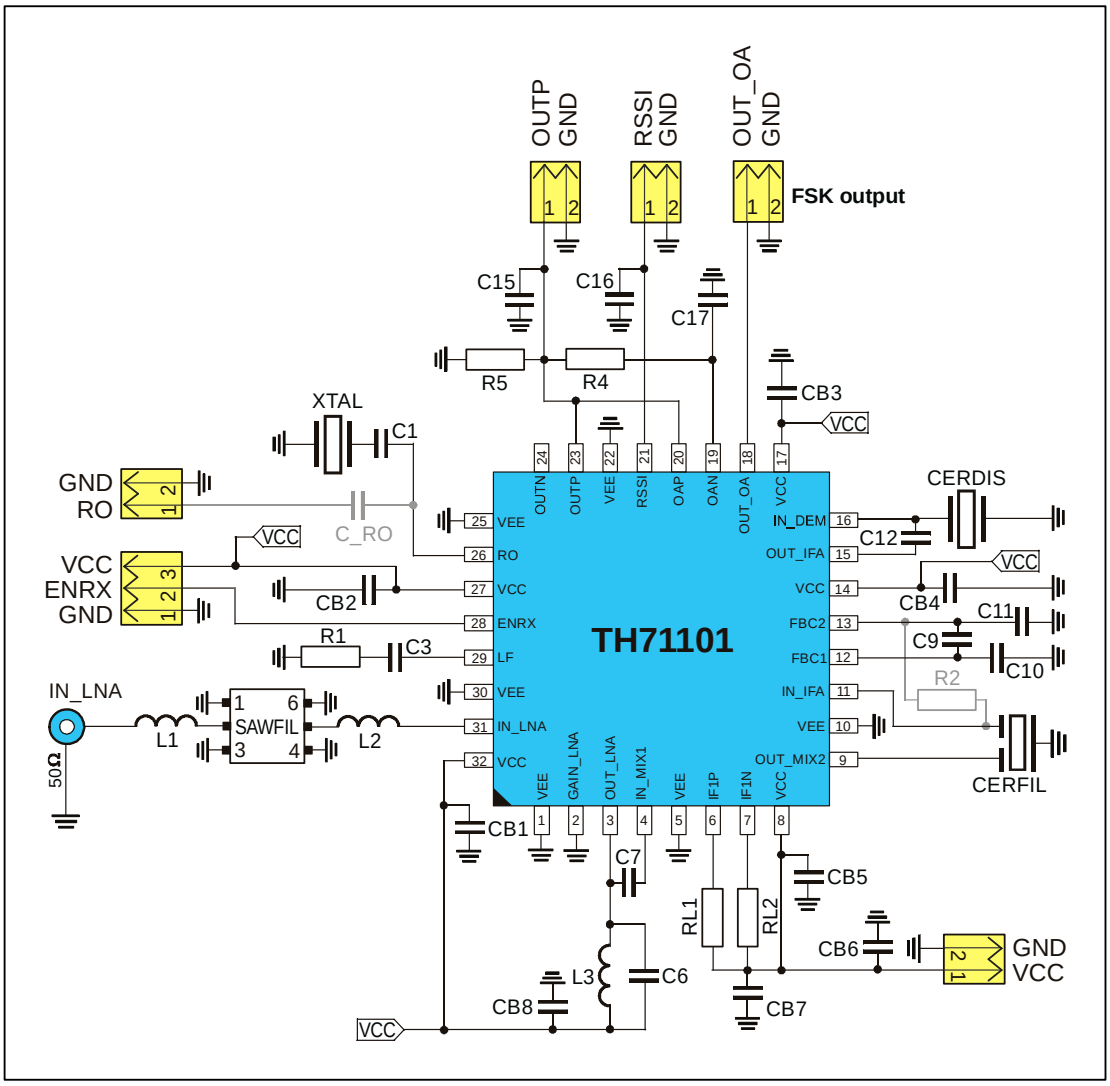

Circuit Features

- Tolerates input frequency variations
- Well-suited for NRZ, Manchester and similar codes

Downloaded from Elcodis.com electronic components distributor

2.1.2 Board Component Values for FSK

Part	Size	Value @ 315 MHz	Value @ 433.92 MHz	Tolerance	Description
C1	0805	27 pF	27 pF	±5%	crystal series capacitor
C3	0603	1 nF	1 nF	±10%	loop filter capacitor
C6	0603	6.8 pF	4.7 pF	±5%	LNA output tank capacitor
C7	0603	2.7 pF	2.2 pF	±5%	MIX1 input matching capacitor
C9	0603	33 nF	33 nF	±10%	IFA feedback capacitor
C10	0603	1 nF	1 nF	±10%	IFA feedback capacitor
C11	0603	1 nF	1 nF	±10%	IFA feedback capacitor
C12	0805	10 pF	10 pF	±5%	DEMOD phase-shift capacitor
C15	0805	100 pF	100 pF	±5%	demodulator output low-pass capacitor, this value for data rates < 20 kbps NRZ, for higher data rates decrease the value
C16	0805	1.5 nF	1.5 nF	±10%	RSSI output low-pass capacitor
C17	0805	10 nF	10 nF	±10%	data slicer capacitor, this value for data rates > 0.8 kbps NRZ, for lower data rates increase the value
CB1 to CB5 CB7 to CB8	0603	330 pF	330 pF	±10%	de-coupling capacitor
CB6	0805	33 nF	33 nF	±10%	de-coupling capacitor
C_RO	0603	330 pF	330 pF	±5%	optional capacitor, to couple external RO signal
R1	0805	10 kΩ	10 kΩ	±5%	loop filter resistor
R2	0603	330 Ω	330 Ω	±5%	optional CERFIL output matching resistor
R4	0805	330 kΩ	330 kΩ	±5%	data slicer resistor
R5	0805	220 kΩ	220 kΩ	±5%	loading resistor
RL1	0805	470 Ω	470 Ω	±5%	MIX1 bias resistor
RL2	0805	470 Ω	470 Ω	±5%	MIX1 bias resistor
L1	0603	0 Ω	68 nH	±5%	SAW filter matching inductor from Würth-Elektronik (WE-KI series), or equivalent part
L2	0603	33 nH	82 nH	±5%	
L3	0603	22 nH	15 nH	±5%	LNA output tank inductor from Würth-Elektronik (WE-KI series), or equivalent part
XTAL	SMD 6x3.5	20.35625 MHz @ RF = 315 MHz	26.45125 MHz @ RF = 433.92 MHz	±25ppm cal. ±30ppm temp.	fundamental-mode crystal from Telcona/Horizon (HEX22 series) or equivalent part
	HC49 SMD				fundamental-mode crystal, C_{load} = 10 pF to 15 pF, $C_{0,\,max}$ = 7 pF, $R_{1,\,max}$ = 50 Ωl
SAWFIL	SMD 3x3		SAFCC433MBL0X00 (f_0 = 433.92 MHz)	B_{3dB} = 840 kHz	low-loss SAW filter from Murata, or equivalent part
		SAFDC315MSM0T00 (f_0 = 315.00 MHz)		B_{3dB} = 5MHz	
CERFIL	SMD 3.45x3.1	SFECF10M7HA00		B_{3dB} = 180 kHz	ceramic filter from Murata, or equivalent part
CERDIS	SMD 4.5x2	CDSCB10M7GA135			ceramic discriminator from Murata, or equivalent part

Downloaded from Elcodis.com electronic components distributor

2.1.3 Component Arrangement Top Side for FSK Reception

Board size is 42.7mm x 37.5mm

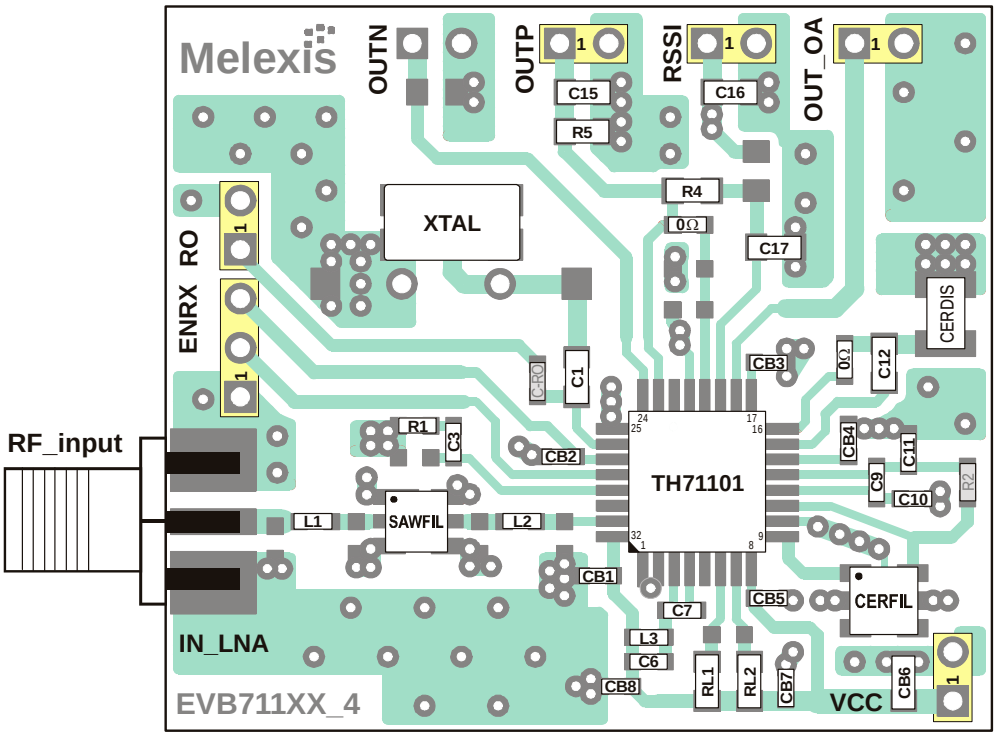

Downloaded from Elcodis.com electronic components distributor

2.2 ASK Application Circuit

2.2.1 Circuit Diagram for ASK Reception

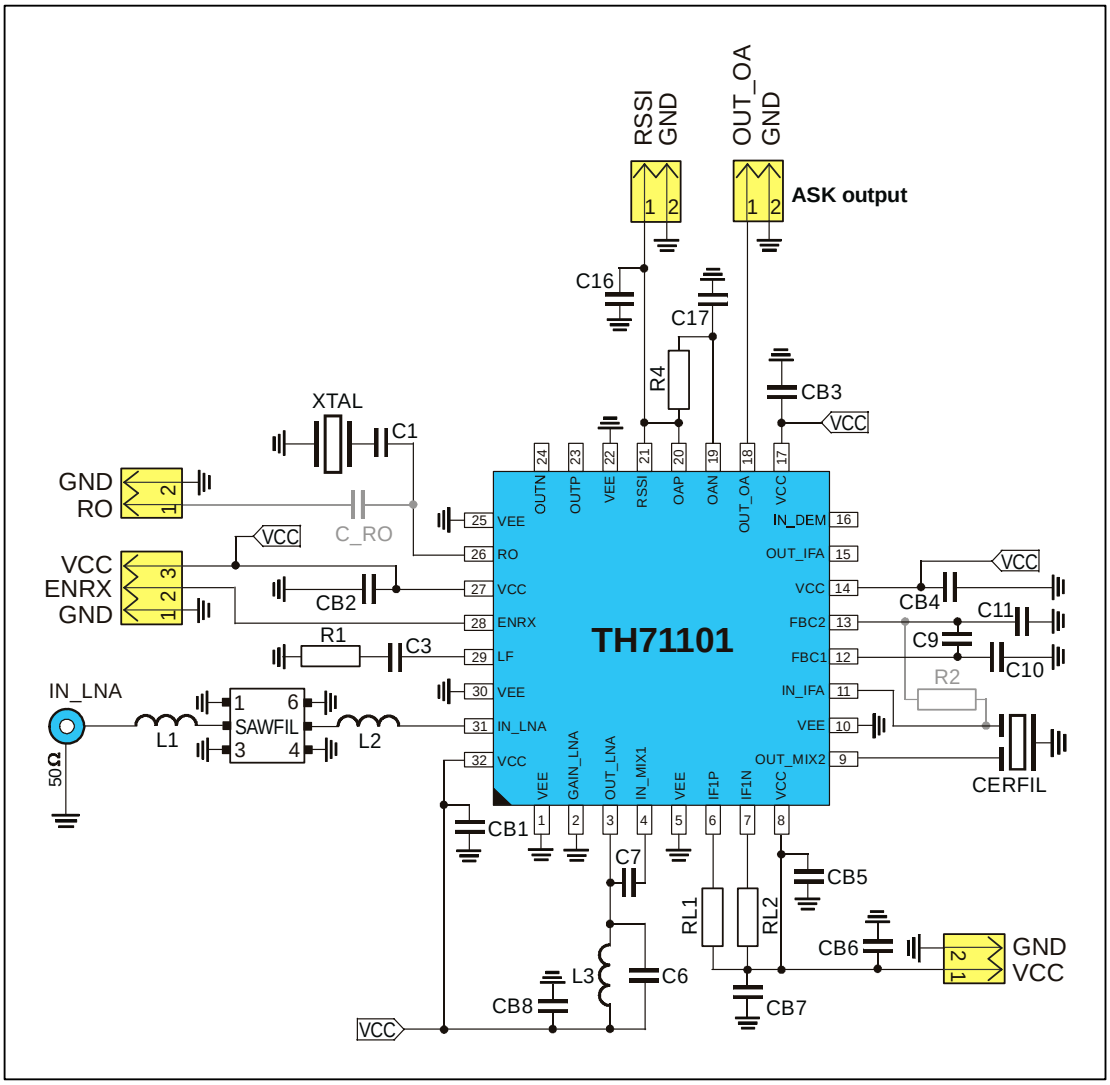

Downloaded from Elcodis.com electronic components distributor

2.2.2 Board Component Values for ASK

Part	Size	Value @ 315 MHz	Value @ 433.92 MHz	Tolerance	Description
C1	0805	27 pF	27 pF	±5%	crystal series capacitor
C3	0603	1 nF	1 nF	±10%	loop filter capacitor
C6	0603	6.8 pF	4.7 pF	±5%	LNA output tank capacitor
C7	0603	2.7 pF	2.2 pF	±5%	MIX1 input matching capacitor
C9	0603	33 nF	33 nF	±10%	IFA feedback capacitor
C10	0603	1 nF	1 nF	±10%	IFA feedback capacitor
C11	0603	1 nF	1 nF	±10%	IFA feedback capacitor
C16	0805	1.5 nF	1.5 nF	±10%	RSSI output low-pass capacitor, this value for data rates < 10 kbps NRZ, for higher data rates decrease the value
C17	0805	10 nF	10 nF	±10%	data slicer capacitor, this value for data rates > 0.8 kbps NRZ, for lower data rates increase the value
CB1 to CB5 CB7 to CB8	0603	330 pF	330 pF	±10%	de-coupling capacitor
CB6	0805	33 nF	33 nF	±10%	de-coupling capacitor
C_RO	0603	330 pF	330 pF	±5%	optional capacitor, to couple external RO signal
R1	0805	10 kΩ	10 kΩ	±5%	loop filter resistor
R2	0603	330 Ω	330 Ω	±5%	optional CERFIL output matching resistor
R4	0805	330 kΩ	330 kΩ	±5%	data slicer resistor
RL1	0805	470 Ω	470 Ω	±5%	MIX1 bias resistor
RL2	0805	470 Ω	470 Ω	±5%	MIX1 bias resistor
L1	0603	0 Ω	68 nH	±5%	SAW filter matching inductor from Würth-Elektronik (WE-KI series), or equivalent part
L2	0603	33 nH	82 nH	±5%	
L3	0603	22 nH	15 nH	±5%	LNA output tank inductor from Würth-Elektronik (WE-KI series), or equivalent part
XTAL	SMD 6x3.5	20.35625 MHz @ RF = 315 MHz	26.45125 MHz @ RF = 433.92 MHz	±25ppm cal. ±30ppm temp.	fundamental-mode crystal from Telcona/Horizon (HEX22 series) or equivalent part
	HC49 SMD				fundamental-mode crystal, C_{load} = 10 pF to 15 pF, $C_{0,\,max}$ = 7 pF, $R_{1,\,max}$ = 50 ΩI
SAWFIL	SMD 3x3		SAFCC433MBL0X00 (f_0 = 433.92 MHz)	B_{3dB} = 840 kHz	low-loss SAW filters from Murata or equivalent part
		SAFDC315MSM0T00 (f_0 = 315.00 MHz)		B_{3dB} = 5MHz	
CERFIL	SMD 3.45x3.1	SFECF10M7HA00		B_{3dB} = 180 kHz	ceramic filter from Murata, or equivalent part

Downloaded from Elcodis.com electronic components distributor

2.2.3 Component Arrangement Top Side for ASK Reception

Board size is 42.7mm x 37.5mm

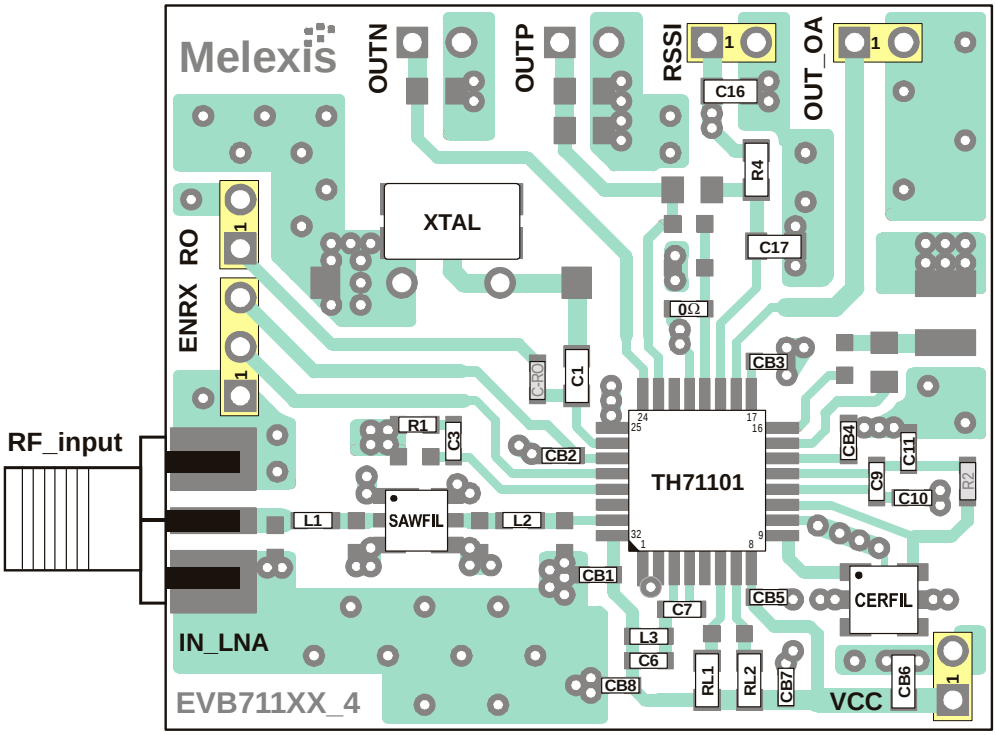

Downloaded from Elcodis.com electronic components distributor

3 Evaluation Board Layouts

Board layout data in Gerber format is available, board size is 37.5mm x 42.7mm.

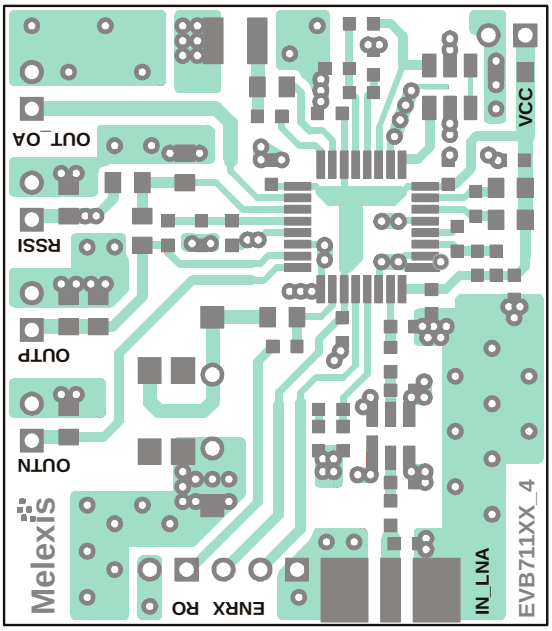

PCB top view

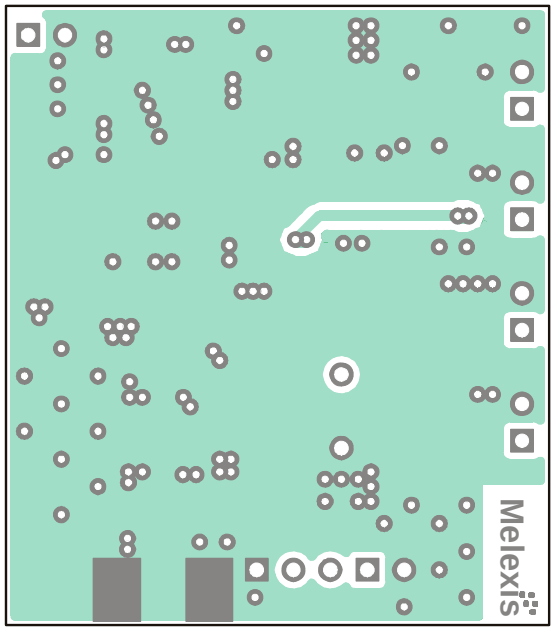

PCB bottom view

4 Board Variants

Type	Frequency/MHz	Modulation	Board Execution
EVB71101	**–315**	**–FSK**	**–A** antenna version
	–433	**–ASK**	**–C** connector version
	–868	**–FM**	
	–915		

Note: **available EVB setups**

Downloaded from Elcodis.com electronic components distributor

5 Package Description

The device TH71101 is RoHS compliant.

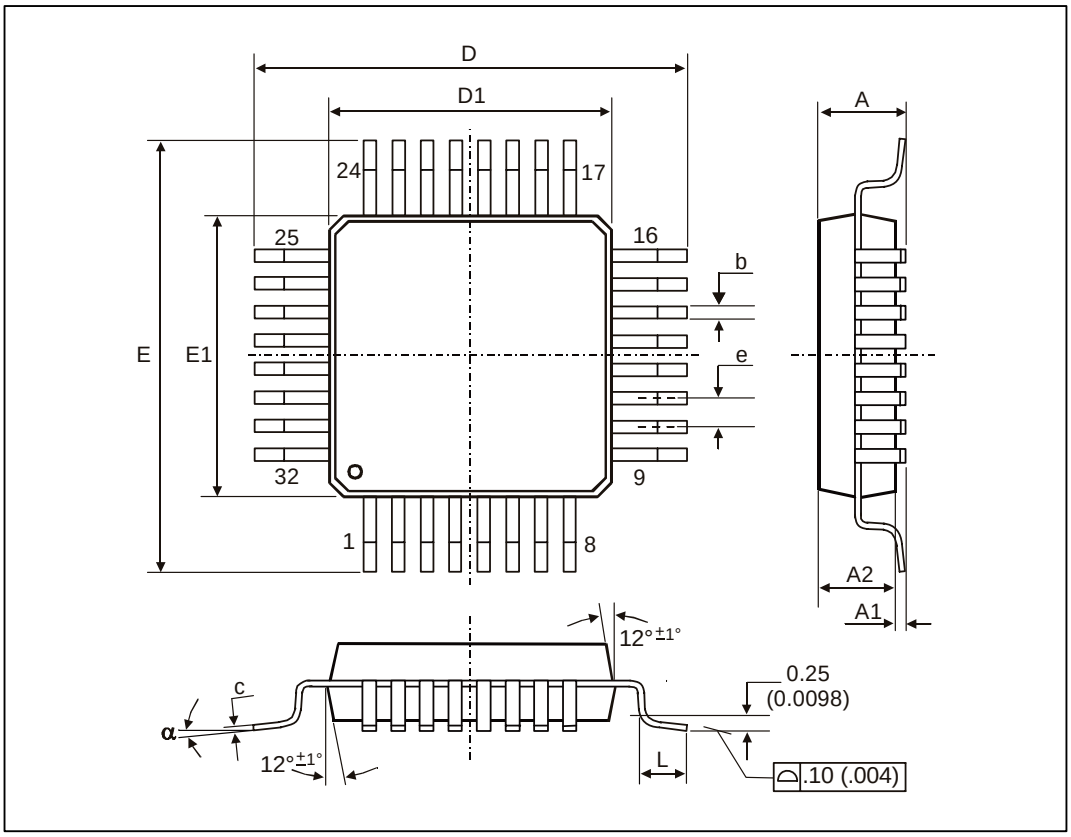

Fig. 2: LQFP32 (Low profile Quad Flat Package)

All Dimension in mm, coplanaríty < 0.1mm										
	E1, D1	**E, D**	**A**	**A1**	**A2**	**e**	**b**	**c**	**L**	**α**
min max	7.00	9.00	1.40 1.60	0.05 0.15	1.35 1.45	0.8	0.30 0.45	0.09 0.20	0.45 0.75	0° 7°
All Dimension in inch, coplanaríty < 0.004”										
min max	0.276	0.354	0.055 0.063	0.002 0.006	0.053 0.057	0.031	0.012 0.018	0.0035 0.0079	0.018 0.030	0° 7°

5.1 Soldering Information

- The device TH71101 is qualified for MSL3 with soldering peak temperature 260 deg C according to JEDEC J-STD-2.

Downloaded from Elcodis.com electronic components distributor

6 Disclaimer

1) The information included in this documentation is subject to Melexis intellectual and other property rights. Reproduction of information is permissible only if the information will not be altered and is accompanied by all associated conditions, limitations and notices.

2) Any use of the documentation without the prior written consent of Melexis other than the one set forth in clause 1 is an unfair and deceptive business practice. Melexis is not responsible or liable for such altered documentation.

3) The information furnished by Melexis in this documentation is provided 'as is'. Except as expressly warranted in any other applicable license agreement, Melexis disclaims all warranties either express, implied, statutory or otherwise including but not limited to the merchantability, fitness for a particular purpose, title and non-infringement with regard to the content of this documentation.

4) Notwithstanding the fact that Melexis endeavors to take care of the concept and content of this documentation, it may include technical or factual inaccuracies or typographical errors. Melexis disclaims any responsibility in connection herewith.

5) Melexis reserves the right to change the documentation, the specifications and prices at any time and without notice. Therefore, prior to designing this product into a system, it is necessary to check with Melexis for current information.

6) Melexis shall not be liable to recipient or any third party for any damages, including but not limited to personal injury, property damage, loss of profits, loss of use, interrupt of business or indirect, special incidental or consequential damages, of any kind, in connection with or arising out of the furnishing, performance or use of the information in this documentation.

7) The product described in this documentation is intended for use in normal commercial applications. Applications requiring operation beyond ranges specified in this documentation, unusual environmental requirements, or high reliability applications, such as military, medical life-support or life-sustaining equipment are specifically not recommended without additional processing by Melexis for each application.

8) Any supply of products by Melexis will be governed by the Melexis Terms of Sale, published on www.melexis.com.

© Melexis NV. All rights reserved.

For the latest version of this document, go to our website at:
www.melexis.com

Or for additional information contact Melexis Direct:

Europe, Africa:	Americas:	Asia:
Phone: +32 1367 0495	Phone: +1 603 223 2362	Phone: +32 1367 0495
E-mail: sales_europe@melexis.com	E-mail: sales_usa@melexis.com	E-mail: sales_asia@melexis.com

ISO/TS 16949 and ISO14001 Certified

Downloaded from Elcodis.com electronic components distributor