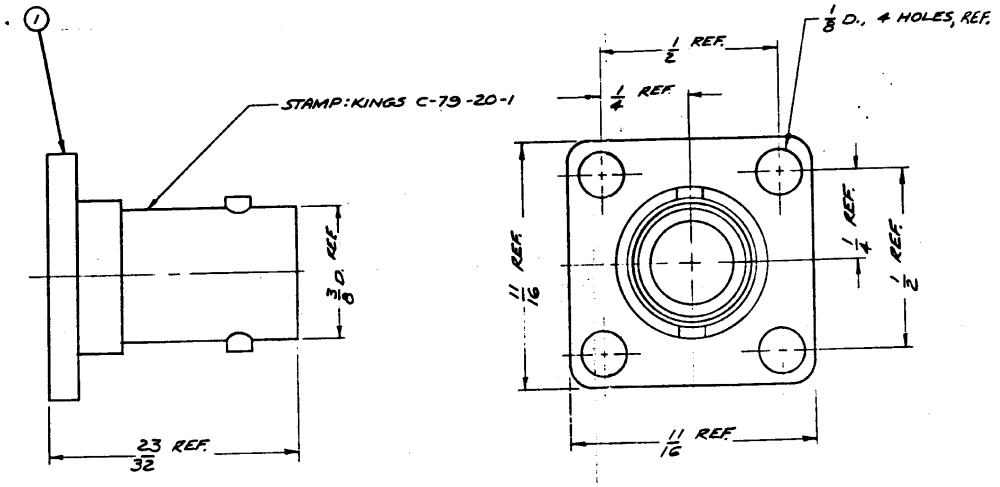

NOTES:
1. MATERIAL: BRASS, QQ-B-626
2. FINISH: SILVER PLT., .0001 MIN. QQ-S-365.

C-79-20-1

RS-D

REVISIONS	
ISSUE	CHANGES
1	CN 19343A JL 18 APR 74
2	CN 29319C AMD 15 OCT 87

REF:

FINISH

SPEC.

MATL.

SPEC.

DUMMY "BNC" RECEPTACLE

DRAWN A.T. DATE 6 JUN 67

APPR. RSTS DATE 6 JUN 67

KINGS ELECTRONICS
60 MARBLEDALE ROAD
TUCKAHOE, N. Y.

C-79-20 RS-D

UNLESS OTHERWISE SPECIFIED:

1. TOLERANCES: FRACTIONS ± .010 DECIMALS ± .004 ANGLES ± 0° 30' T. I. R. CONCENTRICITY OF ANY 2 DIAMETERS MAY NOT EXCEED THE SUM OF THEIR TOLERANCES.
2. REMOVE ALL BURRS, BREAK SHARP EDGES .005 MAX.
3. NO FILLETS PERMITTED.
4. SURFACE ROUGHNESS 63 MICROINCHES RMS MAX.
5. ALL DIMENSIONS PRIOR TO PLATING.

SHET20EH 100M Approved Tracing Vellum 5367

Downloaded from Elcodis.com electronic components distributor