THREE TERMINAL POSITIVE VOLTAGE REGULATORS
5V, 8V, 12V, 15V.

KIA78M×× Series of three-terminal positive voltage regulators employ built-in current limiting, thermal shutdown, and safe-operating area protection which makes them virtually immune to damage from output overloads. With adequate heatsinking, they can deliver in excess of 0.5A output current.

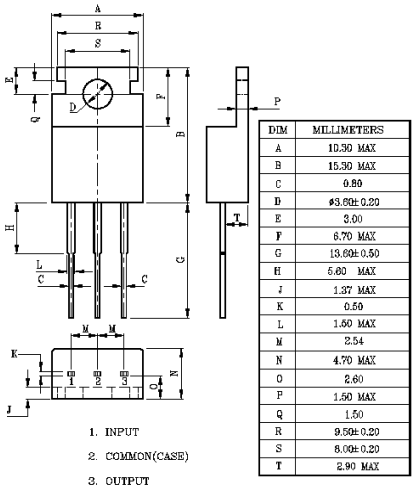

DIM	MILLIMETERS
A	10.30 MAX
B	15.30 MAX
C	0.80
D	ø3.60± 0.20
E	3.00
F	6.70 MAX
G	13.60± 0.50
H	5.60 MAX
J	1.37 MAX
K	0.50
L	1.50 MAX
M	2.54
N	4.70 MAX
O	2.60
P	1.50 MAX
Q	1.50
R	9.50± 0.20
S	8.00± 0.20
T	2.90 MAX

TO-220AB

FEATURES

- Output current in excess of 0.5A.
- No external components.
- Internal thermal overload protection.
- Internal short circuit current limiting.
- Output transistor safe-area compensation.
- Available in TO-220AB and TO-220IS package.

MAXIMUM RATINGS (Ta=25℃)

CHARACTERISTIC	SYMBOL	RATING	UNIT
Input Voltage	V_{IN}	35	V
Power Dissipation	P_D	Internally Limited	(Note1)
Operating Junction Temperature	T_j	-40~125	℃
Storage Temperature	T_{stg}	-55~150	℃
Soldering Temperature (10 seconds)	T_{sol}	260	℃

* Note1 : · Thermal Resistance Junction-Cases. ($R_{\theta jc}$=5℃/W.)
· Thermal Resistance Junction-Air. ($R_{\theta jA}$=65℃/W.)

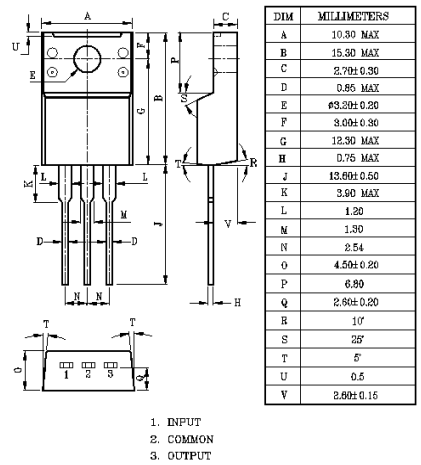

DIM	MILLIMETERS
A	10.30 MAX
B	15.30 MAX
C	2.70± 0.30
D	0.85 MAX
E	ø3.20± 0.20
F	3.00± 0.30
G	12.30 MAX
H	0.75 MAX
J	13.60± 0.50
K	3.90 MAX
L	1.20
M	1.30
N	2.54
O	4.50± 0.20
P	6.80
Q	2.60± 0.20
R	10°
S	25°
T	5°
U	0.5
V	2.60± 0.15

TO-220IS

Downloaded from Elcodis.com electronic components distributor

EQUIVALENT CIRCUIT

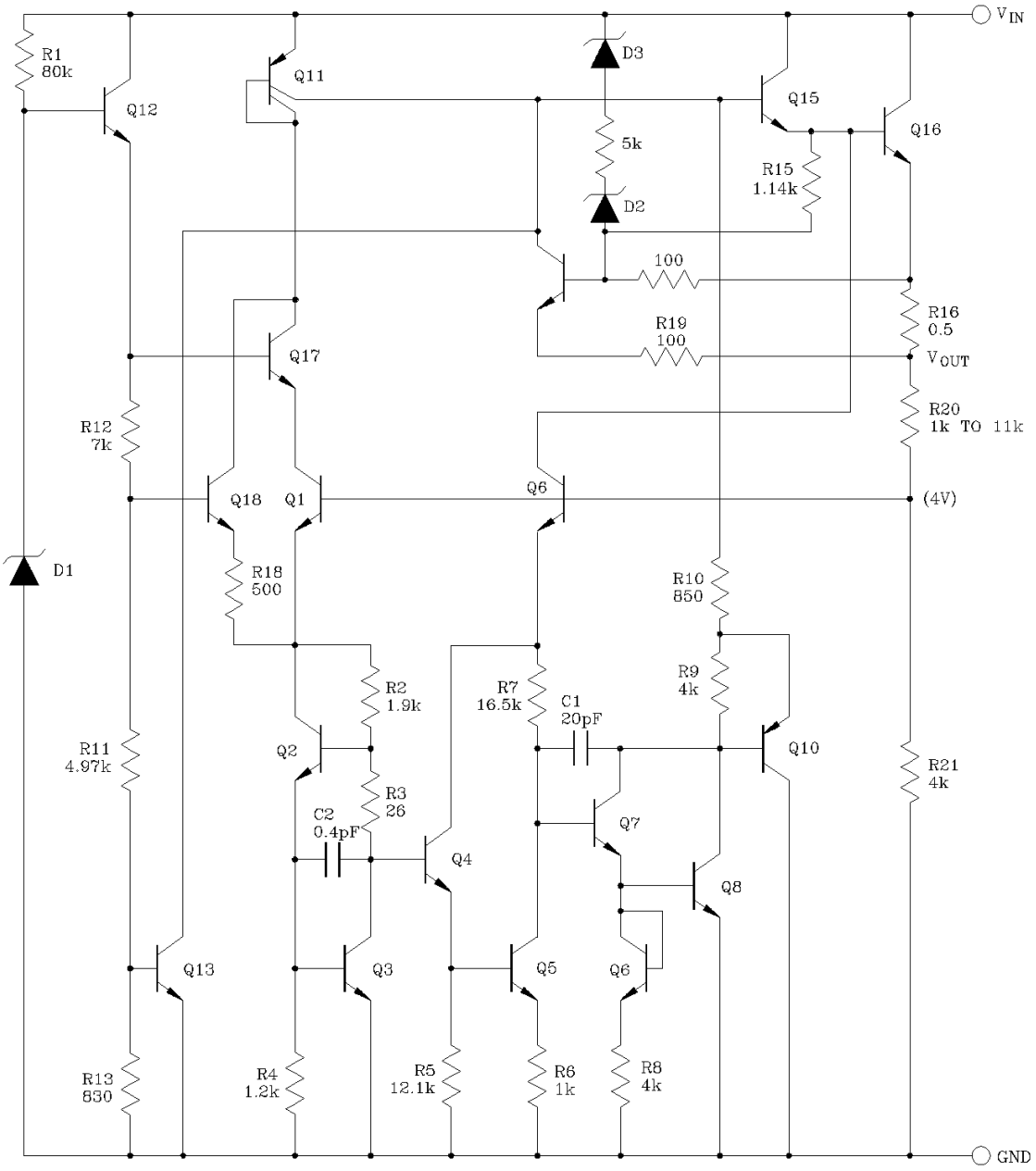

Downloaded from Elcodis.com electronic components distributor

ELECTRICAL CHARACTERISTICS
KIA78M05P/PI
(unless otherwise specified : V_{IN}=10V, C_{IN}=0.33μF, Co=0.1μF)

CHARACTERISTIC	SYMBOL	TEST CONDITION	MIN.	TYP.	MAX.	UNIT
Output Voltage	V_O	I_O=500mA	4.8	5.0	5.2	V
		5mA≦I_O≦500mA P_D≦7.5W, 7.5V≦V_{IN}≦20V	4.75	5.0	5.25	
Line Regulation	V_{Reg} Line	7.2V≦V_{IN}≦25V, I_O=100mA	-	-	50	mV
		7.2V≦V_{IN}≦25V, I_O=500mA	-	-	100	
Load Regulation	V_{Reg} Load	5mA≦I_O≦500mA	-	-	100	mV
Quiescent Current	I_B	I_O=500mA	-	4	6	mA
Quiescent Current Change	ΔI_B	5mA≦I_O≦500mA	-	-	0.5	mA
		7.5V≦V_{IN}≦25V, I_O=500mA	-	-	1.0	mA
Output Noise Voltage	V_{NO}	f=10Hz～100kHz	-	40	-	μV
Ripple Rejection	R·R	f=120Hz, I_O=500mA	65	78	-	dB
Dropout Voltage	V_D	I_O=500mA	-	2.0	-	V
Long Term Stability	ΔV_O	I_O=500mA	-	-	20	mV/khrs
Short Circuit Current	I_{SC}	V_I=35V	-	300	-	mA
Output Voltage Drift	$\Delta V_O/\Delta T$	I_O=5mA, T_j=0～125℃	-	-0.5	-	mV/℃

Downloaded from Elcodis.com electronic components distributor

ELECTRICAL CHARACTERISTICS
KIA78M08P/PI
(unless otherwise specified : V_{IN}=14V, C_{IN}=0.33μF, Co=0.1μF)

CHARACTERISTIC	SYMBOL	TEST CONDITION	MIN.	TYP.	MAX.	UNIT
Output Voltage	V_O	I_O=500mA	7.7	8	8.3	V
		5mA≦I_O≦500mA P_D≦7.5W, 10.5V≦V_{IN}≦23V	7.6	8	8.4	
Line Regulation	V_{Reg} Line	10.5V≦V_{IN}≦25V, I_O=100mA	-	-	80	mV
		10.5V≦V_{IN}≦25V, I_O=500mA	-	-	160	
Load Regulation	V_{Reg} Load	5mA≦I_O≦500mA	-	-	160	mV
Quiescent Current	I_B	I_O=500mA	-	4	6	mA
Quiescent Current Change	ΔI_B	5mA≦I_O≦500mA	-	-	0.5	mA
		10.5V≦V_{IN}≦25V, I_O=500mA	-	-	1.0	mA
Output Noise Voltage	V_{NO}	f=10Hz～100kHz	-	50	-	μV
Ripple Rejection	R·R	f=120Hz, I_O=500mA	65	75	-	dB
Dropout Voltage	V_D	I_O=500mA	-	2.0	-	V
Long Term Stability	ΔV_O	I_O=500mA	-	-	40	mV/khrs
Short Circuit Current	I_{SC}	V_I=35V	-	300	-	mA
Output Voltage Drift	$\Delta V_O/\Delta T$	I_O=5mA, T_j=0～125℃	-	-0.5	-	mV/℃

Downloaded from Elcodis.com electronic components distributor

ELECTRICAL CHARACTERISTICS
KIA78M12P/PI
(unless otherwise specified : V_{IN}=19V, C_{IN}=0.33μF, Co=0.1μF)

CHARACTERISTIC	SYMBOL	TEST CONDITION	MIN.	TYP.	MAX.	UNIT
Output Voltage	V_O	I_O=500mA	11.5	12	12.5	V
		5mA≦I_O≦500mA P_D≦7.5W, 14.8V≦V_{IN}≦27V	11.4	12	12.6	
Line Regulation	V_{Reg} Line	14.5V≦V_{IN}≦30V, I_O=100mA	-	-	120	mV
		14.5V≦V_{IN}≦30V, I_O=500mA	-	-	240	
Load Regulation	V_{Reg} Load	5mA≦I_O≦500mA	-	-	240	mV
Quiescent Current	I_B	I_O=500mA	-	4	6	mA
Quiescent Current Change	ΔI_B	5mA≦I_O≦500mA	-	-	0.5	mA
		14.8V≦V_{IN}≦30V, I_O=500mA	-	-	1.0	mA
Output Noise Voltage	V_{NO}	f=10Hz～100kHz	-	75	-	μV
Ripple Rejection	R·R	f=120Hz, I_O=500mA	65	75	-	dB
Dropout Voltage	V_D	I_O=500mA	-	2.0	-	V
Long Term Stability	ΔV_O	I_O=500mA	-	-	48	mV/khrs
Short Circuit Current	I_{SC}	V_{IN}=35V	-	300	-	mA
Output Voltage Drift	$\Delta V_O/\Delta T$	I_O=5mA, T_j=0～125℃	-	-0.5	-	mV/℃

Downloaded from Elcodis.com electronic components distributor

ELECTRICAL CHARACTERISTICS
KIA78M15P/PI
(unless otherwise specified : V_{IN}=19V, C_{IN}=0.33μF, Co=0.1μF)

CHARACTERISTIC	SYMBOL	TEST CONDITION	MIN.	TYP.	MAX.	UNIT
Output Voltage	V_O	I_O=500mA	14.4	15	15.6	V
		5mA≦I_O≦500mA P_D≦7.5W, 18V≦V_{IN}≦30V	14.25	15	15.75	
Line Regulation	V_{Reg} Line	17.6V≦V_{IN}≦30V, I_O=100mA	-	-	150	mV
		17.6V≦V_{IN}≦30V, I_O=500mA	-	-	300	
Load Regulation	V_{Reg} Load	5mA≦I_O≦500mA	-	-	300	mV
Quiescent Current	I_B	I_O=500mA	-	4	6	mA
Quiescent Current Change	ΔI_B	5mA≦I_O≦500mA	-	-	0.5	mA
		18V≦V_{IN}≦30V, I_O=500mA	-	-	1.0	mA
Output Noise Voltage	V_{NO}	f=10Hz～100kHz	-	90	-	μV
Ripple Rejection	R·R	f=120Hz, I_O=500mA	65	70	-	dB
Dropout Voltage	V_D	I_O=500mA	-	2.0	-	V
Lone Term Stability	ΔV_O	I_O=500mA	-	-	60	mV/khrs
Short Circuit Current	I_{SC}	V_{IN}=35V	-	300	-	mA
Output Voltage Drift	$\Delta V_O/\Delta T$	I_O=5mA, T_j=0～125℃	-	-1	-	mV/℃

Downloaded from Elcodis.com electronic components distributor

PEAK OUTPUT CURRENT

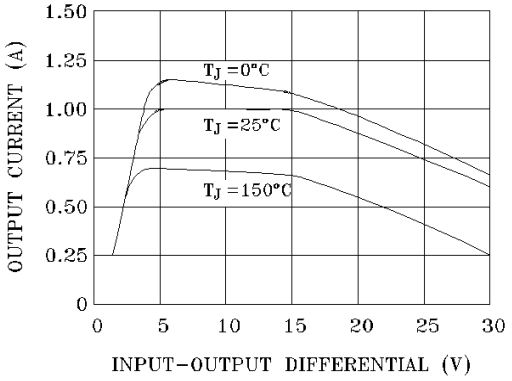

RIPPLE REJECTION

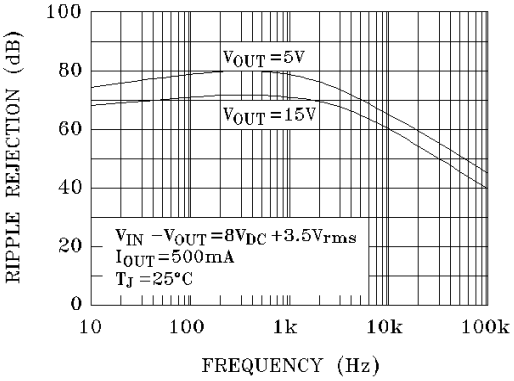

RIPPLE REJECTION

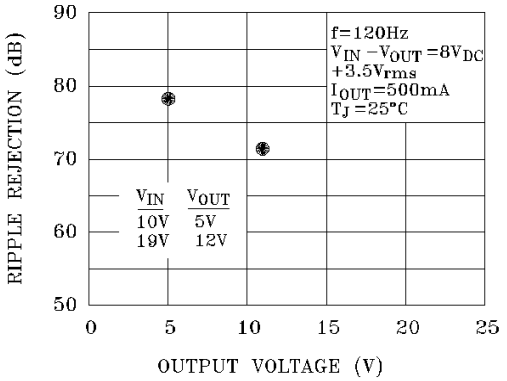

DROPOUT VOLTAGE

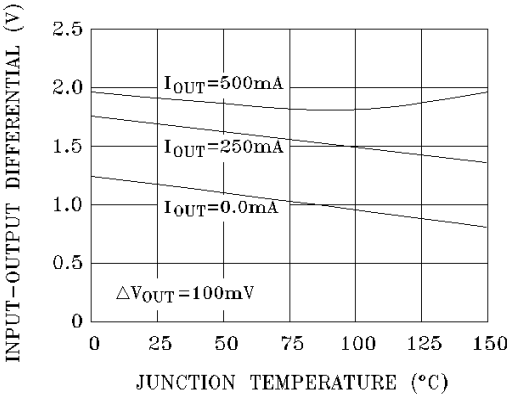

OUTPUT VOLTAGE
(Normalized to 1V at Tj =25°C)

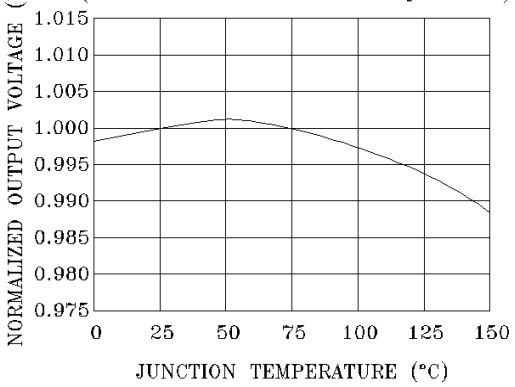

QUIESCENT CURRENT

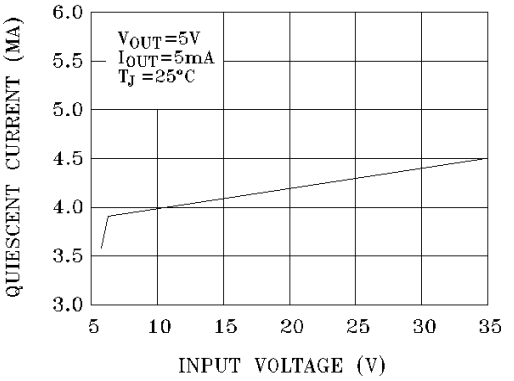

Downloaded from Elcodis.com electronic components distributor

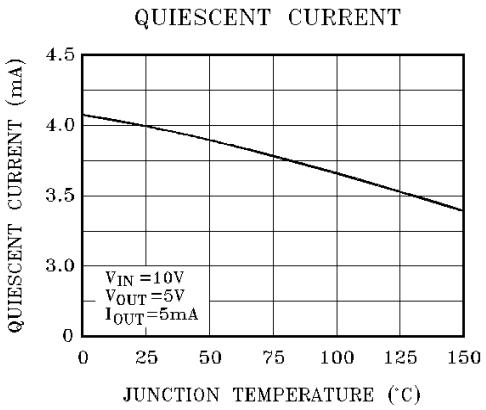

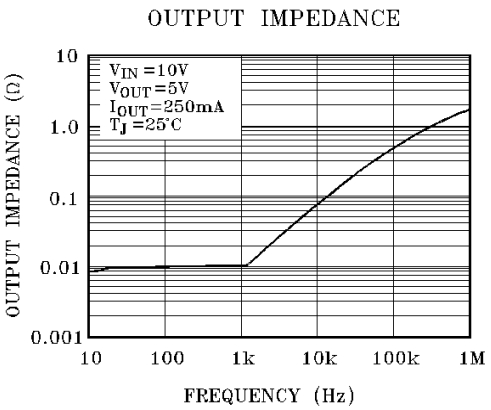

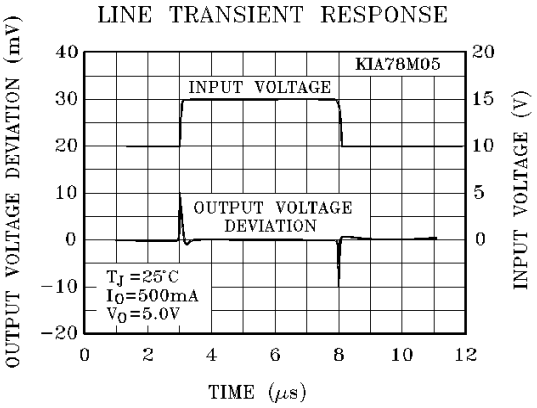

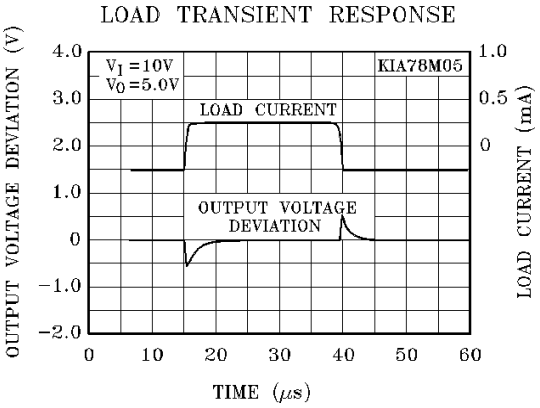

Design Considerations

The KIA78MXX fixed voltage regulator series has built-in thermal overload protection which prevents the device from being damaged due to excessive junction temperature.

The regulators also contain internal short-circuit protection which limits the maximum output current, and safe-area protection for the pass transistor which reduces the short circuit current as the voltage across the pass transistor is increased. Although the internal power dissipation is automatically limited, the maximum junction temperature of the device must be kept below+125℃ in order to meet data sheet specifications. An adequate heatsink should be provided to assure this limit is not exceeded under worst-case operating conditions (maximum input voltage and load current) if reliable performance is to be obtained.

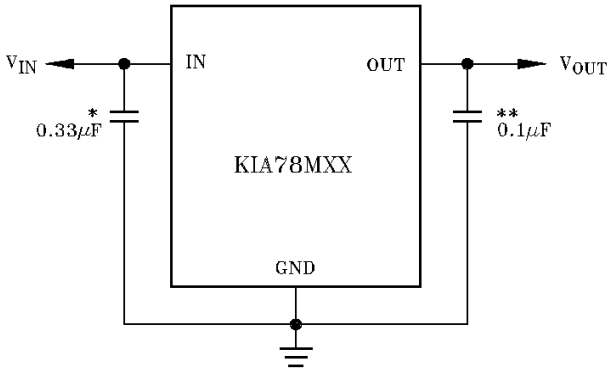

* Required if regulator input is more then 4 inches form input filter capacitor (or if no input filter capacitor is used).

** Optional for improved transient response.

Downloaded from Elcodis.com electronic components distributor