FAIRCHILD
A Schlumberger Company

MIL-STD-883
July 1986—Rev 1[5]

μA702QB Wideband DC Amplifier

Aerospace and Defense Data Sheet
Linear Products

Description

The μA702QB is a monolithic DC amplifier constructed using the Fairchild Planar Epitaxial process. It is intended for use as an operational amplifier in analog computers, as a precision instrumentation amplifier, or in other applications requiring a feedback amplifier useful from DC to 30 MHz.[6]

- **Low Offset Voltage**
- **Low Offset Voltage Drift**
- **Wide Bandwidth**
- **High Slew Rate**

Connection Diagram 8-Lead Can (Top View)

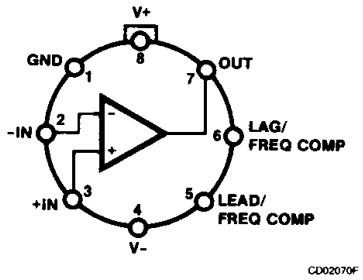

Lead 4 connected to case.

Connection Diagram 10-Lead Flatpak (Top View)

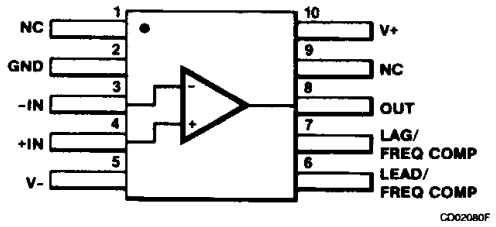

Order Information

Part No.	Case/ Finish	Package Code Mil-M-38510, Appendix C
μA702HMQB	GC	A-1 8-Lead Can
μA702FMQB	HA	F-4 10-Lead Flatpak
μA702DMQB	CA	D-1 14-Lead DIP

14

Downloaded from Elcodis.com electronic components distributor

Absolute Maximum Ratings

Storage Temperature Range	−65°C to +175°C
Operating Temperature Range	−55°C to +125°C
Lead Temperature (soldering, 60 s)	300°C
Internal Power Dissipation[11]	
Can and Flatpak	330 mW
DIP	400 mW
Supply Voltage	21 V
Differential Input Voltage	±5.0 V
Input Voltage[12]	+1.5 V to −6.0 V
Peak Output Current	50 mA

Processing: MIL-STD-883, Method 5004

Burn-In: Method 1015, Condition A, PDA calculated using Method 5005, Subgroup 1

Quality Conformance Inspection: MIL-STD-883, Method 5005

Group A Electrical Tests Subgroups:

1. Static tests at 25°C
2. Static tests at 125°C
3. Static tests at −55°C
4. Dynamic tests at 25°C
5. Dynamic tests at 125°C
6. Dynamic tests at −55°C
9. AC tests at 25°C

Group C and D Endpoints: Group A, Subgroup 1

Notes

1. 100% Test and Group A
2. Group A
3. Periodic tests, Group C
4. Guaranteed but not tested
5. When changes occur, FSC will make data sheet revisions available. Contact local sales representative for the latest revision.
6. For more information on device function, refer to the Fairchild Linear Data Book Commercial Section.
7. Z_I is guaranteed by I_{IB}: $Z_I = 2.0\ V_T/I_{IB}$, $V_T = 26$ mV at 25°C, 34 mV at 125°C, and 19 mV at −55°C.
8. P_{c1} is guaranteed by I_{CC1}: $P_{c1} = (12\ V)(I_{CC}) + (6.0\ V)(I_{CC1})$.
9. V_{IR} is guaranteed by the CMR test.
10. P_{c2} is guaranteed by I_{CC2}: $P_{c2} = (6.0\ V)(I_{CC2}) + (3.0\ V)(I_{CC2})$.
11. Rating applies to ambient temperatures up to 125°C. Above 125°C ambient, derate linearly at 150°C/W for the Can and Flatpak and 120°C/W for the DIP.
12. For supply voltage of 21 V.

Transient Response Test Circuits

Figure 1 Unity-Gain Amplifier (Lag Compensation)

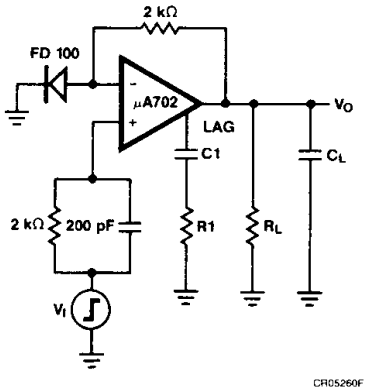

Figure 2 X100 Amplifier (Lead Compensation)

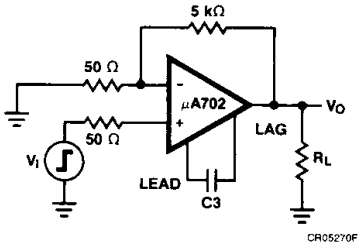

Downloaded from Elcodis.com electronic components distributor

μA702QB
Electrical Characteristics V+ = 12 V, V− = −6.0 V, unless otherwise specified.

Symbol	Characteristic		Condition	Min	Max	Unit	Note	Subgrp
V_{IO}	Input Offset Voltage		$R_S = 50\ \Omega$, $V_{CM} = 0$ V		2.0	mV	1	1
					3.0	mV	1	2,3
$\Delta V_{IO}/\Delta T$	Input Offset Voltage Temperature Sensitivity		$25°C \leqslant T_A \leqslant 125°C$		10	μV/°C	4	2
			$-55°C \leqslant T_A \leqslant +25°C$		10	μV/°C	4	3
I_{IO}	Input Offset Current		$V_{CM} = 0$ V		500	nA	1	1,2
					1500	nA	1	3
$\Delta I_{IO}/\Delta T$	Input Offset Current Temperature Sensitivity		$25°C \leqslant T_A \leqslant 125°C$		5.0	nA/°C	4	2
			$-55°C \leqslant T_A \leqslant +25°C$		16	nA/°C	4	3
I_{IB}	Input Bias Current		$V_{CM} = 0$ V		3.2	μA	1	1
					10	μA	1	2,3
Z_I	Input Impedance[7]			16		kΩ	1	1
I_{CC1}	Supply Current		$V_O = 0$ V		6.7	mA	1	1,2
					7.5	mA	1	3
P_{c1}	Power Consumption[8]		$V_O = 0$ V		121	mW	1	1,2
					135	mW	1	3
CMR	Common Mode Rejection		$-4.0\ V \leqslant V_{CM} \leqslant 0.5$ V, $R_S = 2.0$ kΩ	80		dB	1	1
				70		dB	1	2,3
V_{IR}	Input Voltage Range[9]			−4.0	0.5	V	1	1,2,3
PSRR	Power Supply Rejection Ratio		V+ = 12 V, V− = −6.0 V to V+ = 6.0 V, V− = −3.0 V, $R_S = 2.0$ kΩ		200	μV/V	1	1,2,3
A_{VS}	Large Signal Voltage Gain		$R_L = 100$ kΩ, $V_O = \pm 5.0$ V	2.5	6.0	V/mV	1	4
				2.0	7.0	V/mV	1	5,6
V_{OP}	Output Voltage Swing		$R_L = 100$ kΩ	±5.0		V	1	4,5,6
			$R_L = 10$ kΩ	±3.5		V	1	4,5,6
$TR(t_r)$	Transient Response *(See Figure 1)*	Rise Time	C1 = 0.01 μF, R1 = 20 Ω, $R_L = 100$ kΩ, $V_I = 10$ mV, $C_L = 100$ pF, $A_V = 1.0$		120	ns	2	9
$TR(o_s)$		Overshoot			50	%	2	9
$TR(t_r)$	Transient Response *(See Figure 2)*	Rise Time	C3 = 50 pF, $R_L = 100$ kΩ, $V_I = 1.0$ mV, $A_V = 100$		30	ns	2	9
$TR(o_s)$		Overshoot			40	%	2	9

14

Downloaded from Elcodis.com electronic components distributor

μA702QB (Cont.)
Electrical Characteristics V+ = +6.0 V, V− = −3.0 V, unless otherwise specified.

Symbol	Characteristic	Condition	Min	Max	Unit	Note	Subgrp
V_{IO}	Input Offset Voltage	$R_S = 50\ \Omega$, $V_{CM} = 0$ V		3.0	mV	1	1
				4.0	mV	1	2,3
$\Delta I_{IO}/\Delta T$	Input Offset Voltage Temperature Sensitivity	$25°C \leqslant T_A \leqslant 125°C$		15	μV/°C	4	2
		$-55°C \leqslant T_A \leqslant +25°C$		15	μV/°C	4	3
I_{IO}	Input Offset Current	$V_{CM} = 0$ V		500	nA	1	1,2
				1500	nA	1	3
$\Delta I_{IO}/\Delta T$	Input Offset Current Temperature Sensitivity	$25°C \leqslant T_A \leqslant 125°C$		4.0	nA/°C	4	2
		$-55°C \leqslant T_A \leqslant +25°C$		13	nA/°C	4	3
I_{IB}	Input Bias Current	$V_{CM} = 0$ V		2.3	μA	1	1
				7.5	μA	1	2,3
Z_I	Input Impedance[7]		22		kΩ	1	1
I_{CC2}	Supply Current	$V_O = 0$ V		3.3	mA	1	1,2
				3.9	mA	1	3
P_{c2}	Power Consumption[10]	$V_O = 0$ V		30	mW	1	1,2
				35	mW	1	3
CMR	Common Mode Rejection	$-1.5\ V \leqslant V_{CM} \leqslant 0.5$ V, $R_S = 2.0$ kΩ	80		dB	1	1
			70		dB	1	2,3
V_{IR}	Input Voltage Range[9]		−1.5	0.5	V	1	1,2,3
A_{VS}	Large Signal Voltage Gain	$R_L = 100$ kΩ, $V_O = \pm 2.5$ V	0.6	1.5	V/mV	1	4
			0.5	1.75	V/mV	1	5,6
V_{OP}	Output Voltage Swing	$R_L = 100$ kΩ	±2.5		V	1	4,5,6
		$R_L = 10$ kΩ	±1.5		V	1	4,5,6

Primary Burn-In Circuit

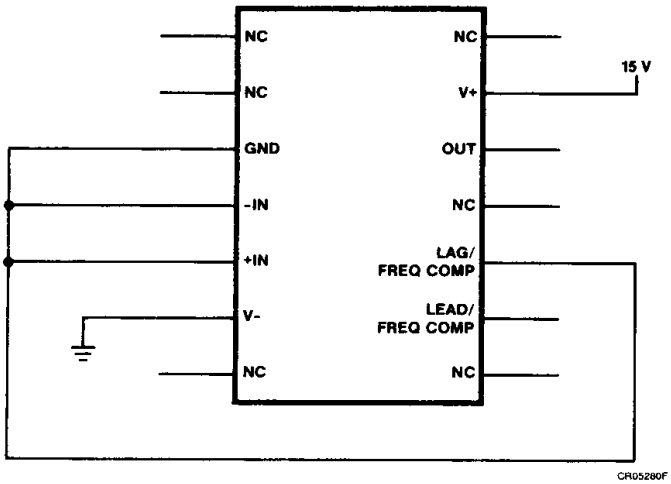

Equivalent Circuit

Refer to the Fairchild Linear Data Book Commercial Section

Downloaded from Elcodis.com electronic components distributor