Sanken Power Devices
from Allegro MicroSystems

STR-A6259H

Universal-Input 13 W 100 kHz Flyback Switching Regulators

Switching Regulators

Package DIP-8

Approximate Scale 1:1

The STR-A6259H is a 100 kHz PWM topology (with ±5% frequency jittering for minimum EMI) regulator specifically designed to satisfy the requirements for increased integration and reliability in flyback converters. It incorporates a primary control and drive circuit with an avalanche-rated power MOSFET.

Covering the power range from below 17 watts for a 230 VAC input, or to 13 watts for a universal (85 to 264 VAC) input, this device can be used in a wide range of applications, from DVD players and VCR player/recorders to ac adapters for cellular phones and digital cameras. An auto-burst standby function reduces power consumption at light load, while multiple protections, including the avalanche-energy guaranteed MOSFET, provide high reliability of system design.

Cycle-by-cycle current limiting, undervoltage lockout with hysteresis, overvoltage protection, and thermal shutdown protect the power supply during the normal overload and fault conditions. Overvoltage protection and thermal shutdown are latched after a short delay. The latch may be reset by cycling the input supply. Low start-up current and a low-power standby mode selected from the secondary circuit completes a comprehensive suite of features.

It is provided in an 8-pin mini-DIP plastic package with pin 6 removed. The leadframe plating is pure Sb, and the package complies with RoHS.

FEATURES AND BENEFITS

- 100 kHz PWM with ±5% frequency jittering for EMI noise filtering cost reduction
- Rugged 650 V avalanche-rated MOSFET:
  - Simplified surge absorption
  - No V_{DSS} derating required
- Low $R_{DS(on)}$: 6 Ω maximum
- Auto-burst mode for stand-by operation or light loads; less transformer audible noise
- Built-in leading edge blanking
- Soft start and low start-up current; start-up circuit disabled in operation
- Auto-burst stand-by (intermittent operation) input power <0.1 W at no load
- Built-in constant-voltage/constant current (CV/CC)
- Multiple protections:
  - Pulse-by-pulse overcurrent protection (OCP)
  - Overload protection (OLP) with auto restart
  - Latching overvoltage protection (OVP)
  - Undervoltage lockout (UVLO) with hysteresis
  - Latching thermal shutdown (TSD)

All performance characteristics given are typical values for circuit or system baseline design only and are at the nominal operating voltage and an ambient temperature of +25°C, unless otherwise stated.

Always order by complete part number, e.g.: **STR-A6259H**

Downloaded from Elcodis.com electronic components distributor

FUNCTIONAL BLOCK DIAGRAM AND TERMINAL ASSIGNMENTS

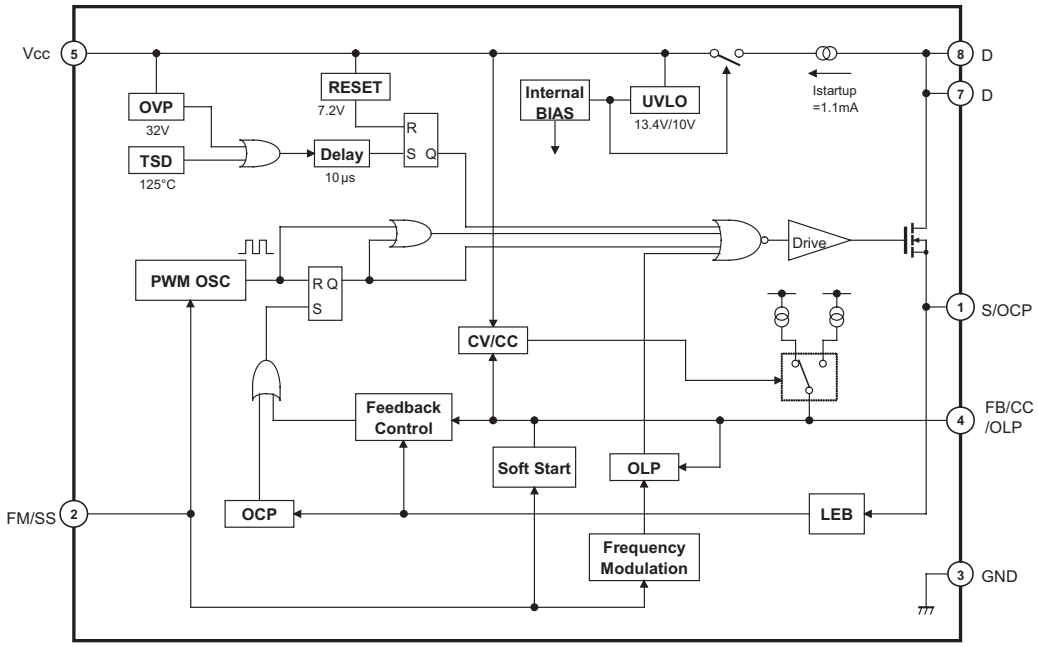

Number	Name	Description	Functions
1	S/OCP	Source/OCP terminal	MOSFET Source/Overcurrent protection
2	FM/SS	FM/Soft start terminal	Capacitor connection terminal for frequency jitter and soft start.
3	GND	Ground terminal	Ground
4	FB /CC/OLP	FB/CC/OLP terminal	Input of constant voltage control signal / constant current operation control signal / over load protection signal
5	VCC	Power supply terminal	Input of power supply for control circuit
7	D	Drain terminals	MOSFET drain / Input of startup current
8			

Allegro MicroSystems, Inc.
115 Northeast Cutoff, Box 15036
Worcester, Massachusetts 01615-0036
SanKen

Downloaded from Elcodis.com electronic components distributor

ABSOLUTE MAXIMUM RATINGS at T_A = 25°C

Characteristic	Symbol	Terminal	Note	Max.	Unit
Drain Current[1]	I_{Dpeak}	8-1	Single Pulse	1.8	A
Maximum Switching Current	I_{DMAX}	8-1	$V_{S/OCP}$ = 0.83 V with reference to GND, T_A = –20 to 125°C	1.8	A
Single Pulse Avalanche Energy[2]	E_{AS}	8-1	Single Pulse	24	mJ
			V_{DD} = 99 V, L = 20 mH, I_L = 1.8 A	24	mJ
S/OCP Terminal Voltage	V_{OCP}	1-3		–0.3 to 6	V
Controller (MIC) Input Voltage	Vcc	5-3		36	V
FB/CC/OLP Terminal Voltage	V_{FB}	4-3		–0.3 to 11	V
FM Terminal Voltage	V_{FM}	2-3		–0.3 to 6	V
MOSFET Power Dissipation[3,4]	P_{D1}	8-1		1.35	W
Controller (MIC) Power Dissipation[5]	P_{D2}	5-3	For Vcc×Icc	0.15	W
Operating Internal Frame Temperature[6]	T_F		Refer to T_{OP}	–20 to 125	°C
Operating Ambient Temperature	T_{op}			–20 to 125	°C
Storage Temperature	T_{stg}			–40 to 125	°C
Channel Junction Temperature	T_J			150	°C

[1]Refer to figure 1
[2]Refer to figure 3
[3]Refer to figure 5
[4]Mounted on 15 x 15 mm printed circuit board
[5]Refer to figure 6
[6]Measured at the root of terminal 3

Figure 1 – MOSFET Safe Operating Area Derating Curve

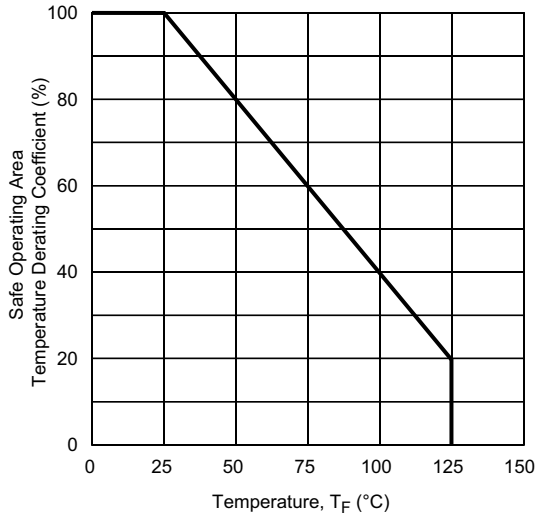

Figure 2 – MOSFET Safe Operating Area Drain Current versus Voltage

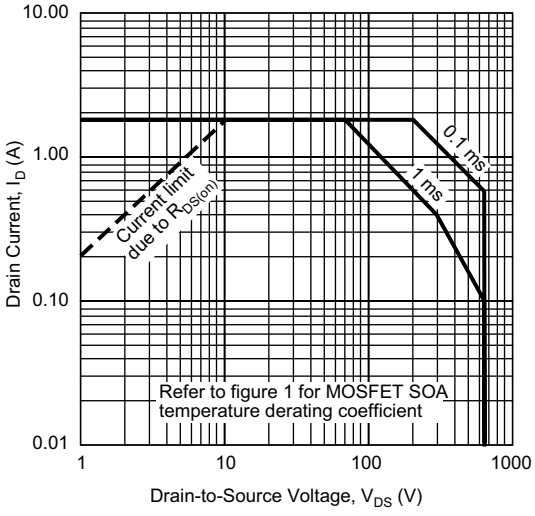

Downloaded from Elcodis.com electronic components distributor

Figure 3 – MOSFET Avalanche Energy Derating Curve

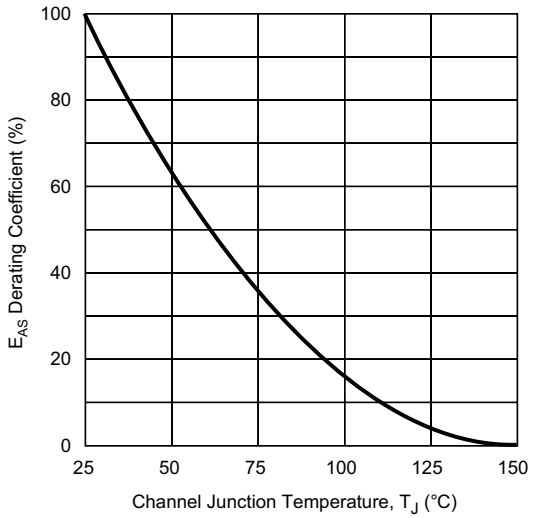

Figure 4 – Transient Thermal Resistance

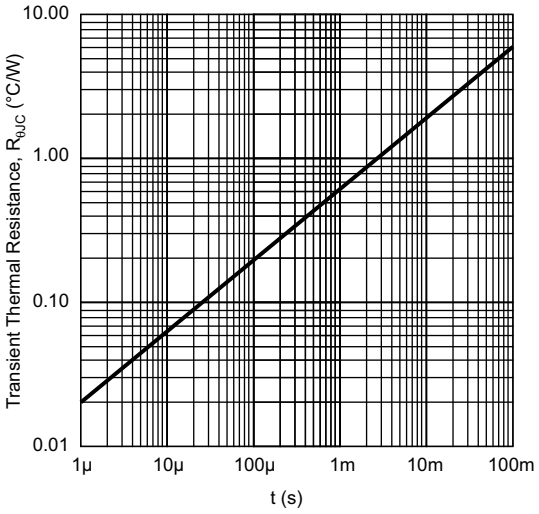

Figure 5 – MOSFET Power Dissipation versus Temperature

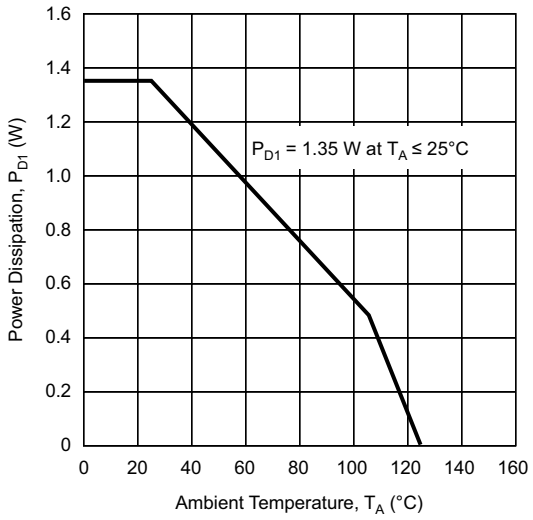

Figure 6 – MIC Power Dissipation versus Temperature

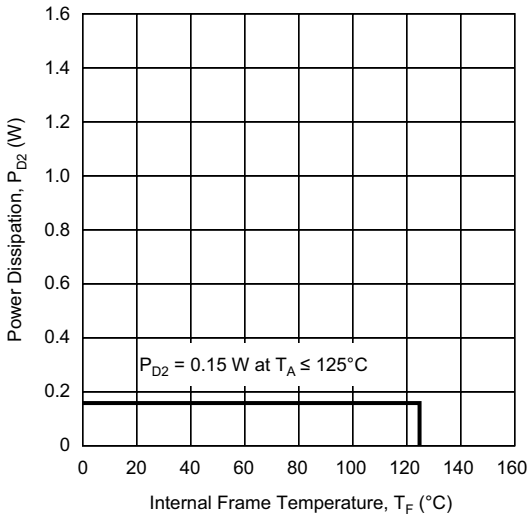

Downloaded from Elcodis.com electronic components distributor

ELECTRICAL CHARACTERISTICS for Controller (MIC), valid at T_A = 25°C, V_{CC} = 18 V, unless otherwise specified

Characteristic	Symbol	Terminal	Test Conditions	Min.	Typ.	Max.	Unit
Operation Start Voltage	$V_{CC(ON)}$	5-3	(Power supply voltage at which device starts operating) Measurement circuit 1, V_{CC} = 0 though 13.1 to 16.1 V	12.9	14.3	15.7	V
Operation Stop Voltage	$V_{CC(OFF)}$	5-3	(Power supply voltage at which device stops operating) Measurement circuit 1, V_{CC} = 16.1 through 9 to 11 V	9	10	11	V
Circuit Current In Operation	$I_{CC(ON)}$	5-3	(Inflow current into power supply terminal, in operation) Measurement circuit 1	–	–	4	mA
Initialization Circuit Current	$I_{CC(OFF)}$	5-3	(Inflow current into power supply terminal, while subject to UVLO prior to operation) Measurement circuit 1, V_{CC} = 13 V	–	–	25	µA
Center Switching Frequency	$f_{osc(av)}$	8-3	(Center oscillation frequency of D terminal) Measurement circuit 2	90	100	110	KHz
Frequency Jitter Deviation	Δf	8-3	Maximum frequency – minimum frequency Measurement circuit 2	6	10	14	kHz
Maximum Duty Cycle	D_{MAX}	8-3	(Maximum width of the low portion of the D terminal waveform) Measurement circuit 2	70	76	82	%
FM High Voltage	V_{HFM}	2-3	(V_{FM} at which the FM current is changed from 10 µA to –10 µA) Measurement circuit 2	4.0	4.5	5.0	V
FM Low Voltage	V_{LFM}	2-3	(V_{FM} at which the FM current is changed from –10 µA to 10 µA) Measurement circuit 2	3.2	3.6	4.0	V
FM Outflow Current	I_{sorcFM}	2-3	Outflow current from FM terminal at V_{FM} = V_{LFM} (3.7 V typ.) Measurement circuit 2	7.7	11	15.4	µA
FM Inflow Current	I_{sinkFM}	2-3	Inflow current into FM terminal at V_{FM} = V_{HFM} (4.4 V typ.) Measurement circuit 2	–15.4	–11	–7.7	µA
OCP Threshold Voltage	$V_{OCP(th)}$	1-3	(The drain current at which the low portion of the D terminal waveform becomes shorter than the high portion, with V_{OCP} increasing) Measurement circuit 3	0.67	0.74	0.81	V
Leading Edge Blanking Time	t_{wb}	8-3	(The low portion of the D terminal waveform with V_{OCP} = 1 V) Measurement circuit 3	240	350	460	ns
Burst Threshold Voltage	$V_{burst(th)}$	4-3	(FB/CC/OLP terminal voltage at which D terminal waveform oscillation stops due to V_{FB} decreasing from 5 V) Measurement circuit 4	1.0	1.12	1.24	V
OLP Threshold Voltage	$V_{OLP(th)}$	4-3	(FB/CC/OLP terminal voltage at which D terminal waveform oscillation stops due to V_{FB} increasing from 5 V) Measurement circuit 4	7.3	8.6	9.9	V
Output Current at OLP Operation	I_{OLP}	4-3	(Outflow current from FB/CC/OLP terminal at V_{FB} = 8 V) Measurement circuit 4	12	18	25	µA
OLP Delay Time	T_{OLP}	4-3	(Time between surpassing $V_{OLP(th)}$ and stop of oscillation) Measurement circuit 4	0.84	1.2	1.56	s
Maximum Feedback Current	$I_{FB(MAX)}$	4-3	(Outflow current from FB/CC/OLP terminal at V_{FB} = 0 V) Measurement circuit 4	220	310	430	µA

Continued on next page…

Downloaded from Elcodis.com electronic components distributor

ELECTRICAL CHARACTERISTICS for Controller (MIC) continued, valid at T_A = 25°C, V_{CC} = 18 V, unless otherwise specified

Constant Current Set Voltage	$V_{SET(CC)}$	4-3	(FB/CC/OLP terminal voltage at which I_{FB} changes from 280 µA to 16 µA due to V_{FB} increasing from 5 V) Measurement circuit 4	4.9	5.8	6.7	V
Constant Current Reset Voltage	$V_{RES(CC)}$	4-3	(FB/CC/OLP terminal voltage at which I_{FB} changes from 16 µA to 280 µA due to V_{FB} decreasing from 8 V) $V_{RES(CC)} \times V_{CC}$ = 25 V, Measurement circuit 4, V_{CC} = 25 V	3.5	3.9	4.3	V
Start-Up Current	$I_{startup}$	6-3	(Outflow current from V_{CC} terminal at V_{DD} = 600 V) Measurement circuit 5, V_{CC} = 13 V	0.77	1.1	1.43	mA
OVP Threshold Voltage	$V_{CC(OVPth)}$	5-3	(V_{CC} at which the oscillation of the D terminal waveform stops due to V_{CC} increasing from 18 V) Measurement circuit 1, V_{CC} = 18 through 31 to 35.2 V	28.8	32	35.2	V
Latch Circuit Sustaining Current[1]	$I_{CC(H)}$	5-3	(Inflow current into VCC at V_{CC} = 8.4 V, after OVP operation) Measurement circuit 1, V_{CC} = 35.2 to 8.6 V	–	–	270	µA
Latch Circuit Release Voltage[1]	$V_{CC(LaOFF)}$	5-3	(V_{CC} at which I_{CC} drops below 20 µA due to decreasing V_{CC} after OVP operation) Measurement circuit 1, V_{CC} = 35.2 through 5.9 to 8.6 V	5.9	7.2	8.6	V
Thermal Shutdown Operating Temperature	$T_{J(TSD)}$			125	140	–	°C
ELECTRICAL CHARACTERISTICS for MOSFET, valid at T_A = 25°C, V_{CC} = 18 V, unless otherwise specified							
Drain-to-Source Breakdown Voltage	V_{DSS}	8-1	Measurement circuit 6, I_D = 300 µA	650	–	–	V
Drain Leakage Current	I_{DSS}	8-1	(Inflow current into D terminal at V_{DD} = 650 V) Measurement circuit 5	–	–	300	µA
On-Resistance	$R_{DS(ON)}$	8-1	Measurement circuit 3, I_D = 0.4 A	–	–	6	Ω
Switching Time	t_f	8-1	Measurement circuit 2	–	–	250	ns
Thermal Resistance	$R_{\theta ch-F}$		Between channel and internal frame; measured at the root of terminal 3	–	–	52	°C/W

[1]Latch circuit enabled when OVP and TSD in operation

Downloaded from Elcodis.com electronic components distributor

Measurement Circuit 1

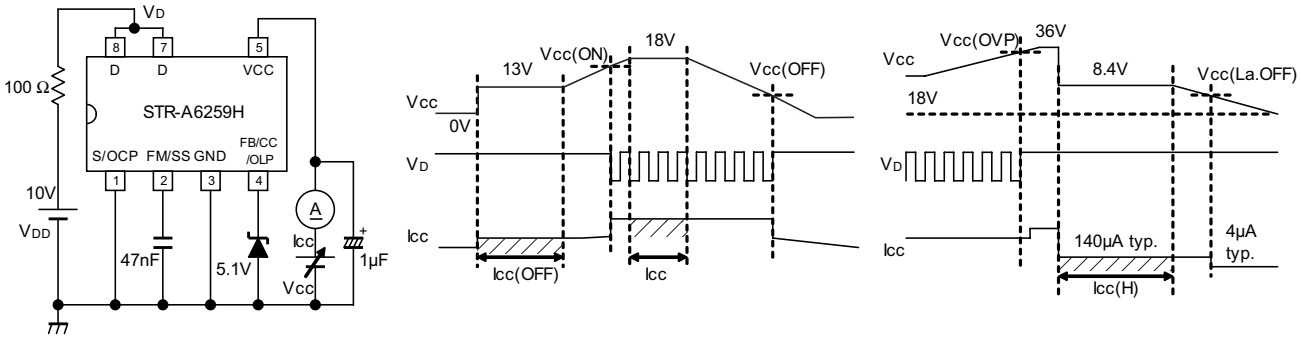

Measurement Circuit 2

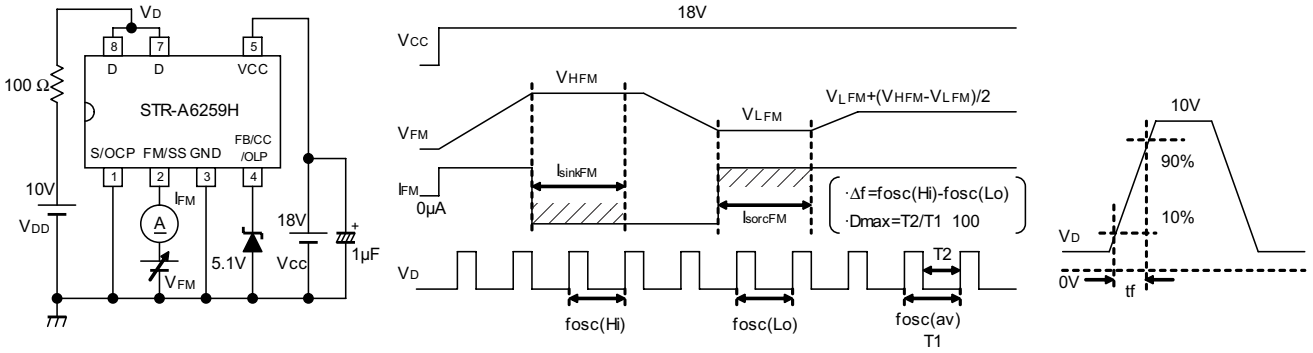

Measurement Circuit 3

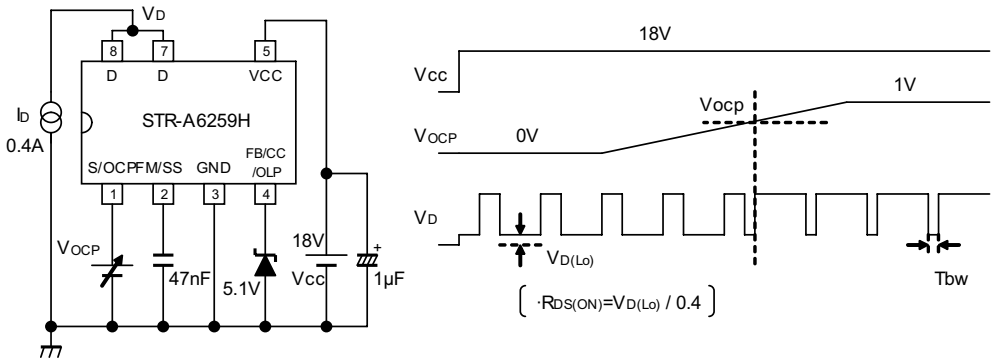

Allegro MicroSystems, Inc.
115 Northeast Cutoff, Box 15036
Worcester, Massachusetts 01615-0036
SanKen

Downloaded from Elcodis.com electronic components distributor

Measurement Circuit 4

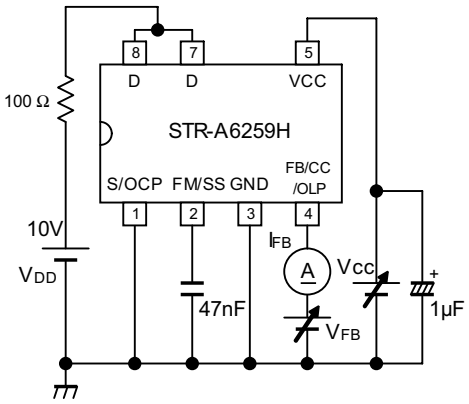

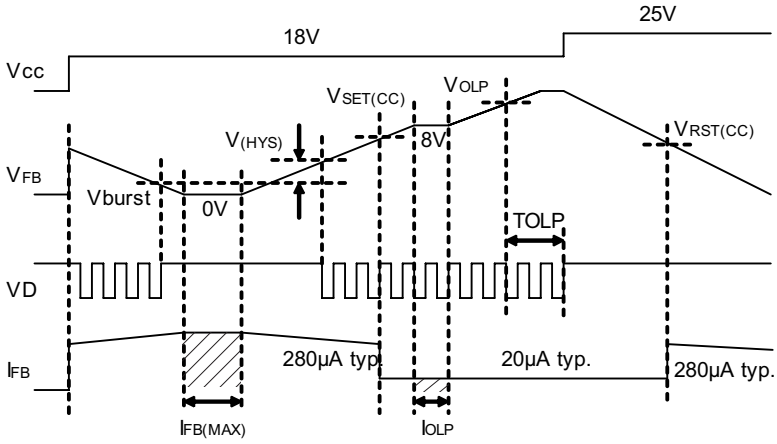

Measurement Circuit 5

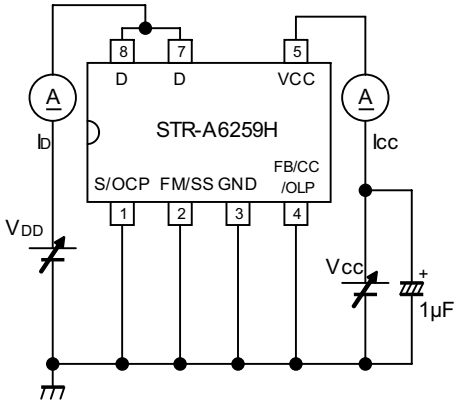

Measurement Circuit 6

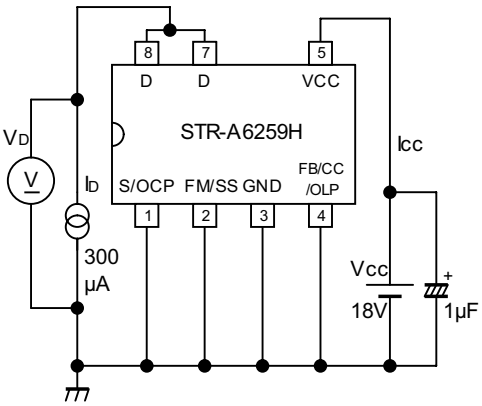

Measurement Circuit 7

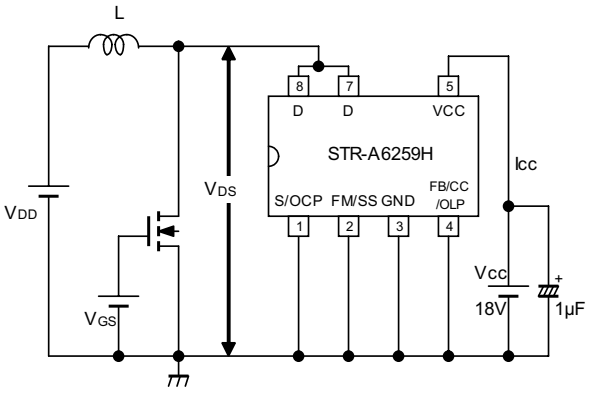

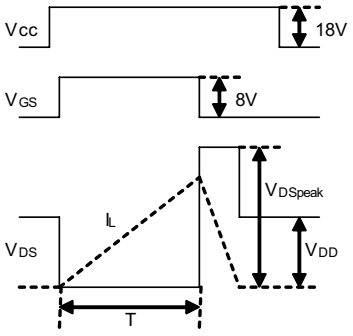

$$E_{AS} = \frac{L}{2}(I_{Lpeak})^2 \times \frac{V_{DS\,peak}}{V_{DSpeak} - V_{DD}}$$

Adjust T such that I_{Lpeak} = 1.8 A

Allegro MicroSystems, Inc.
115 Northeast Cutoff, Box 15036
Worcester, Massachusetts 01615-0036
SanKen

Downloaded from Elcodis.com electronic components distributor

TYPICAL APPLICATION CIRCUIT

For improved thermal dissipation, connect terminals 7 and 8 to as large an area of exposed copper as possible

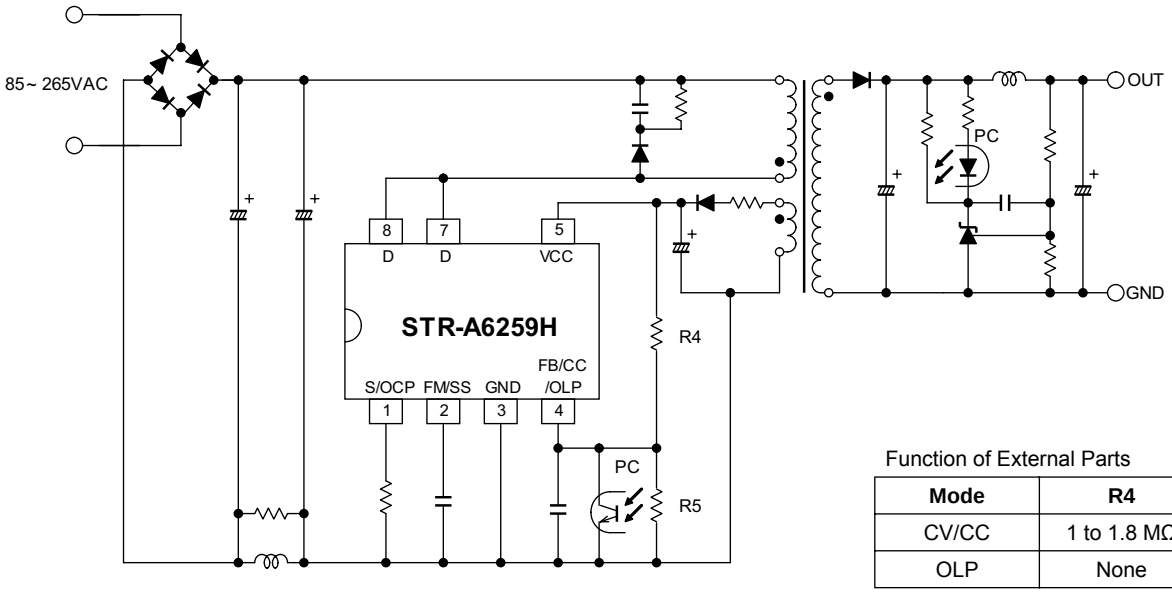

Function of External Parts

Mode	R4	R5
CV/CC	1 to 1.8 MΩ	82 to 150 kΩ
OLP	None	None

Allegro MicroSystems, Inc.
115 Northeast Cutoff, Box 15036
Worcester, Massachusetts 01615-0036
SanKen

Downloaded from Elcodis.com electronic components distributor

PACKAGE DIMENSIONS, DIP-8

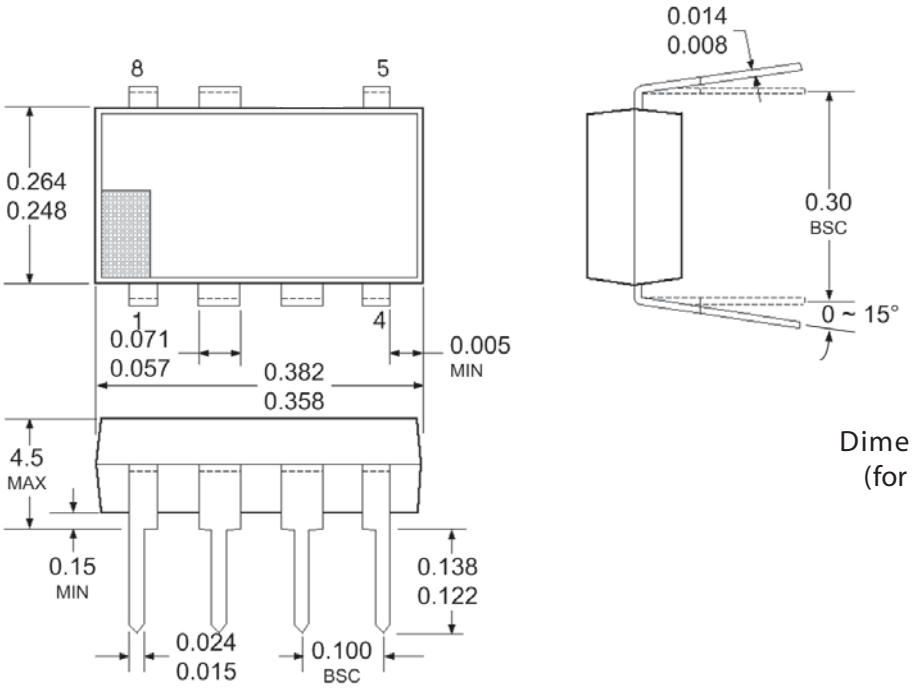

Dimensions in Inches
(for reference only)

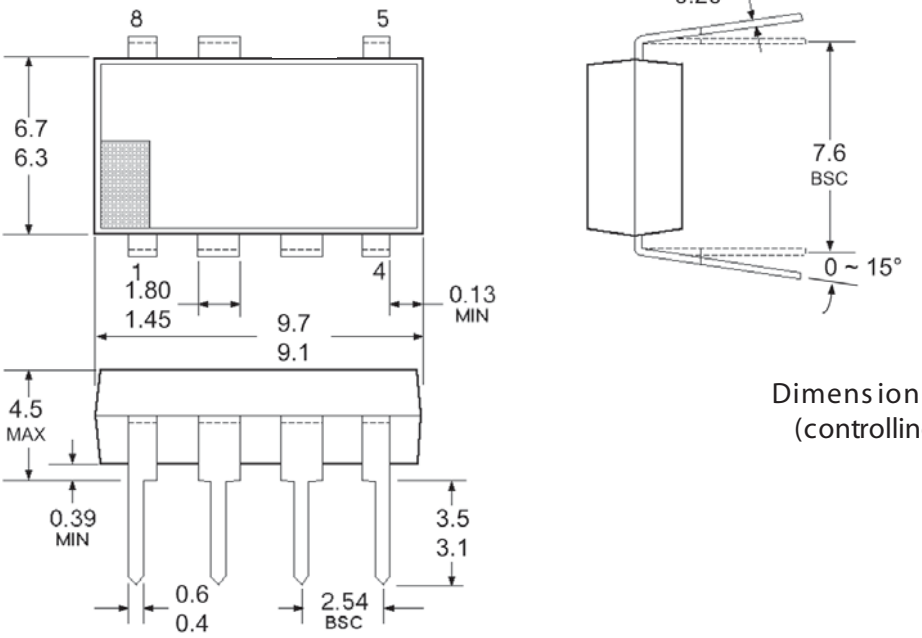

Dimensions in Millimeters
(controlling dimensions)

Downloaded from Elcodis.com electronic components distributor

PACKING SPECIFICATIONS
Minimum packing option: Tubes

Orientation of Devices in Shipping Tubes

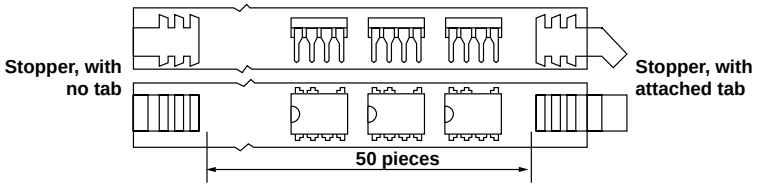

	Type A	Type B
Shipping Tube Dimensions	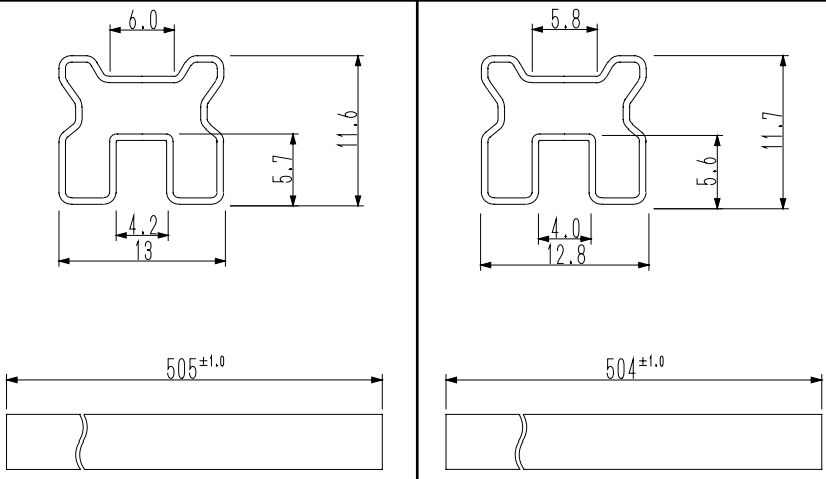	
Inner Carton Dimensions Capacity: 50 tubes per inner carton	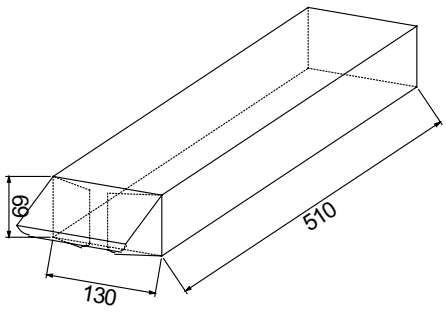	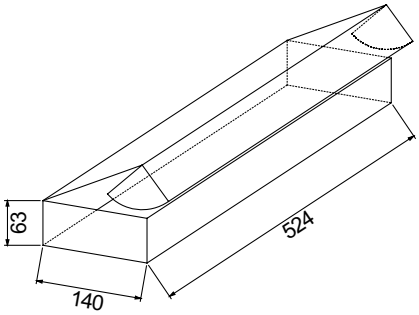
Outer Carton Dimensions Capacity: 4 inner cartons per outer carton; 10,000 devices maximum per outer carton	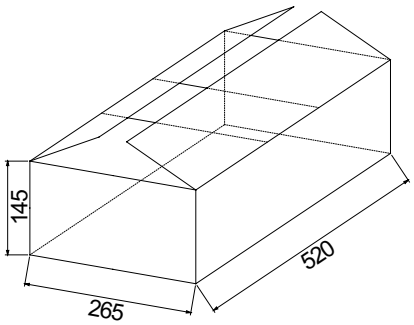	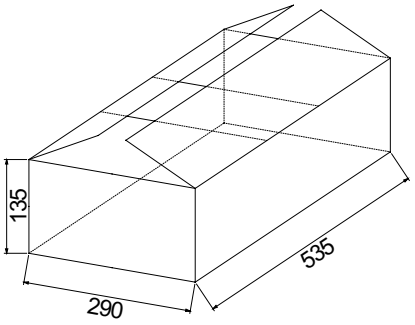

All dimensions: mm

Allegro MicroSystems, Inc.
115 Northeast Cutoff, Box 15036
Worcester, Massachusetts 01615-0036
SanKen

Downloaded from Elcodis.com electronic components distributor

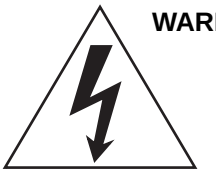

WARNING — These devices are designed to be operated at lethal voltages and energy levels. Circuit designs that embody these components must conform with applicable safety requirements. Precautions must be taken to prevent accidental contact with power-line potentials. Do not connect grounded test equipment.

The use of an isolation transformer is recommended during circuit development and breadboarding.

Because reliability can be affected adversely by improper storage environments and handling methods, please observe the following cautions.

Cautions for Storage

- Ensure that storage conditions comply with the standard temperature (5°C to 35°C) and the standard relative humidity (around 40 to 75%); avoid storage locations that experience extreme changes in temperature or humidity.
- Avoid locations where dust or harmful gases are present and avoid direct sunlight.
- Reinspect for rust in leads and solderability of products that have been stored for a long time.

Cautions for Testing and Handling

When tests are carried out during inspection testing and other standard test periods, protect the products from power surges from the testing device, shorts between adjacent products, and shorts to the heatsink.

Remarks About Using Silicone Grease with a Heatsink

- When silicone grease is used in mounting this product on a heatsink, it shall be applied evenly and thinly. If more silicone grease than required is applied, it may produce stress.
- Volatile-type silicone greases may produce cracks after long periods of time, resulting in reduced heat radiation effect. Silicone grease with low consistency (hard grease) may cause cracks in the mold resin when screwing the product to a heatsink.
- Our recommended silicone greases for heat radiation purposes, which will not cause any adverse effect on the product life, are indicated below:

Type	Suppliers
G746	Shin-Etsu Chemical Co., Ltd.
YG6260	Toshiba Silicone Co., Ltd.
SC102	Dow Corning Toray Silicone Co., Ltd.

Soldering

- When soldering the products, please be sure to minimize the working time, within the following limits:
  260±5°C 10 s
  350±5°C 3 s
- Soldering iron should be at a distance of at least 1.5 mm from the body of the products

Electrostatic Discharge

- When handling the products, operator must be grounded. Grounded wrist straps worn should have at least 1 MΩ of resistance to ground to prevent shock hazard.
- Workbenches where the products are handled should be grounded and be provided with conductive table and floor mats.
- When using measuring equipment such as a curve tracer, the equipment should be grounded.
- When soldering the products, the head of soldering irons or the solder bath must be grounded in other to prevent leak voltages generated by them from being applied to the products.
- The products should always be stored and transported in our shipping containers or conductive containers, or be wrapped in aluminum foil.

Downloaded from Elcodis.com electronic components distributor

The products described herein are manufactured in Japan by Sanken Electric Co., Ltd. for sale by Allegro MicroSystems, Inc.

Sanken and Allegro reserve the right to make, from time to time, such departures from the detail specifications as may be required to permit improvements in the performance, reliability, or manufacturability of its products. Therefore, the user is cautioned to verify that the information in this publication is current before placing any order.

When using the products described herein, the applicability and suitability of such products for the intended purpose shall be reviewed at the users responsibility.

Although Sanken undertakes to enhance the quality and reliability of its products, the occurrence of failure and defect of semiconductor products at a certain rate is inevitable.

Users of Sanken products are requested to take, at their own risk, preventative measures including safety design of the equipment or systems against any possible injury, death, fires or damages to society due to device failure or malfunction.

Sanken products listed in this publication are designed and intended for use as components in general-purpose electronic equipment or apparatus (home appliances, office equipment, telecommunication equipment, measuring equipment, etc.). Their use in any application requiring radiation hardness assurance (e.g., aerospace equipment) is not supported.

When considering the use of Sanken products in applications where higher reliability is required (transportation equipment and its control systems or equipment, fire- or burglar-alarm systems, various safety devices, etc.), contact a company sales representative to discuss and obtain written confirmation of your specifications.

The use of Sanken products without the written consent of Sanken in applications where extremely high reliability is required (aerospace equipment, nuclear power-control stations, life-support systems, etc.) is strictly prohibited.

The information included herein is believed to be accurate and reliable. Application and operation examples described in this publication are given for reference only and Sanken and Allegro assume no responsibility for any infringement of industrial property rights, intellectual property rights, or any other rights of Sanken or Allegro or any third party that may result from its use.

Copyright © 2006 Allegro MicroSystems, Inc.
This datasheet is based on Sanken datasheet SSE2366-2

Allegro MicroSystems, Inc.
115 Northeast Cutoff, Box 15036
Worcester, Massachusetts 01615-0036
SanKen

Downloaded from Elcodis.com electronic components distributor