POWERTIP

# PC 1602-J

## OUTLINE DIMENSION & BLOCK DIAGRAM

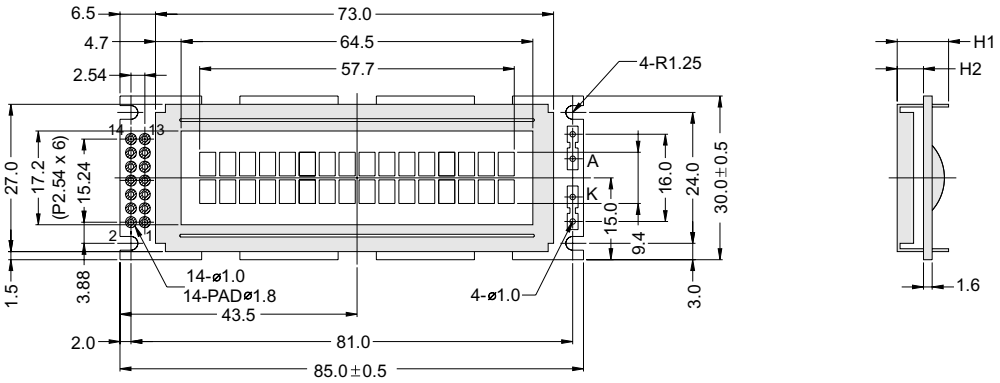


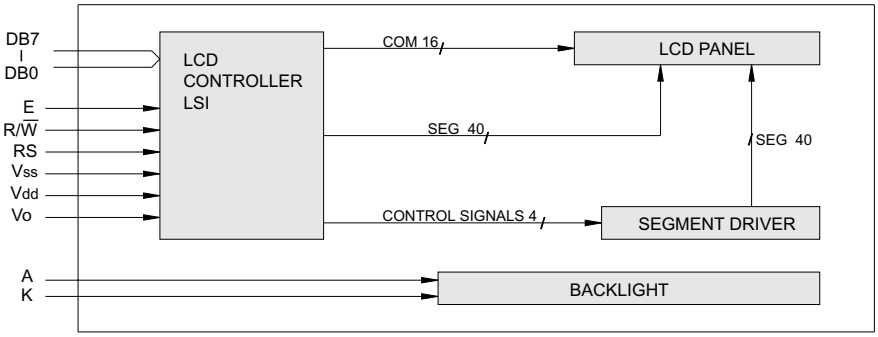


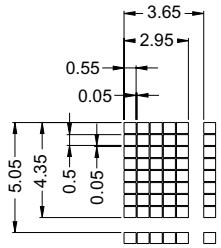


The tolerance unless classified ±0.3mm

| MECHANICAL SPECIFICATION | | | |
|---|---|---|---|
| Overall Size | 85.0 x 30.0 | Module | H2 / H1 |
| View Area | 64.5 x 17.2 | W /O B/L | 4.8 / 9.4 |
| Dot Size | 0.55 x 0.50 | EL B/L | 4.8 / 9.4 |
| Dot Pitch | 0.60 x 0.55 | LED B/L | 9.0 / 13.1 |

| PIN ASSIGNMENT | | |
|---|---|---|
| Pin no. | Symbol | Function |
| 1 | Vdd | Power supply(+) |
| 2 | Vss | Power supply(GND) |
| 3 | Vo | Contrast Adjust |
| 4 | RS | Register select signal |
| 5 | R/$\overline{W}$ | Data read / write |
| 6 | E | Enable signal |
| 7 | DB0 | Data bus line |
| 8 | DB1 | Data bus line |
| 9 | DB2 | Data bus line |
| 10 | DB3 | Data bus line |
| 11 | DB4 | Data bus line |
| 12 | DB5 | Data bus line |
| 13 | DB6 | Data bus line |
| 14 | DB7 | Data bus line |

| ABSOLUTE MAXIMUM RATING | | | | | |
|---|---|---|---|---|---|
| Item | Symbol | Condition | Min. | Max. | Units |
| Supply for logic voltage | Vdd-Vss | 25°C | -0.3 | 7 | V |
| LCD driving supply voltage | Vdd-Vee | 25°C | -0.3 | 13 | V |
| Input voltage | Vin | 25°C | -0.3 | Vdd+0.3 | V |

| ELECTRICAL CHARACTERISTICS | | | | | | | | | |
|---|---|---|---|---|---|---|---|---|---|
| Item | Symbol | Condition | Min. | | Typical | | Max. | | Units |
| Power supply voltage | Vdd-Vss | 25°C | 2.7 | | – | | 5.5 | | V |
| LCD operation voltage | Vop | Top | N | W | N | W | N | W | V |
| | | -20°C | – | 7.1 | – | 7.5 | – | 7.9 | V |
| | | 0°C | 4.5 | – | 4.8 | – | 5.1 | – | V |
| | | 25°C | 4.1 | 6.1 | 4.4 | 6.4 | 4.7 | 6.7 | V |
| | | 50°C | 3.8 | – | 4.1 | – | 4.4 | – | V |
| | | 70°C | – | 5.7 | – | 6 | – | 6.3 | V |
| LCM current consumption (No B/L) | Idd | Vdd=5V | – | | 2 | | 3 | | mA |
| Backlight current consumption | LED/edge | VB/L=4.2V | – | | 40 | | – | | mA |
| | LED/array | VB/L=4.2V | – | | 110 | | – | | mA |

## REMARK

LCD option: STN, TN, FSTN
Backlight Option: LED,EL Backlight feature, other Specs not available on catalog is under request.

Downloaded from Elcodis.com electronic components distributor