CONEXANT

Digital Satellite Tuner

CX24109

Highly Integrated, Direct Down-Conversion Satellite Tuner

Conexant's broadband communications portfolio includes a comprehensive suite of semiconductor solutions that enable the digital home and information network. Combining extensive experience in broadband systems and mixed-signal integrated circuit design, Conexant introduces the CX24109 Digital Satellite Tuner – a highly integrated, direct down-conversion satellite tuner intended for high-volume digital video, audio, and data receivers. The CX24109 consists of an LNA, variable RF attenuator, quadrature downconverter, variable IF gain amplifiers, variable low-pass filters, VCO, and synthesizer. This highly integrated satellite tuner RF IC does not require a balun, therefore simplifying RF layout and reducing the overall BOM cost.

When combined with Conexant's CX24123 QPSK demodulator/FEC decoder, the chipset provides a complete broadband satellite front-end solution capable of operating from 1 to 45 Msps in the most demanding satellite environments. The CX24109 and CX24123 provides a streamlined, cost optimized front-end solution offered in a compact design that saves valuable board space and is easy to implement.

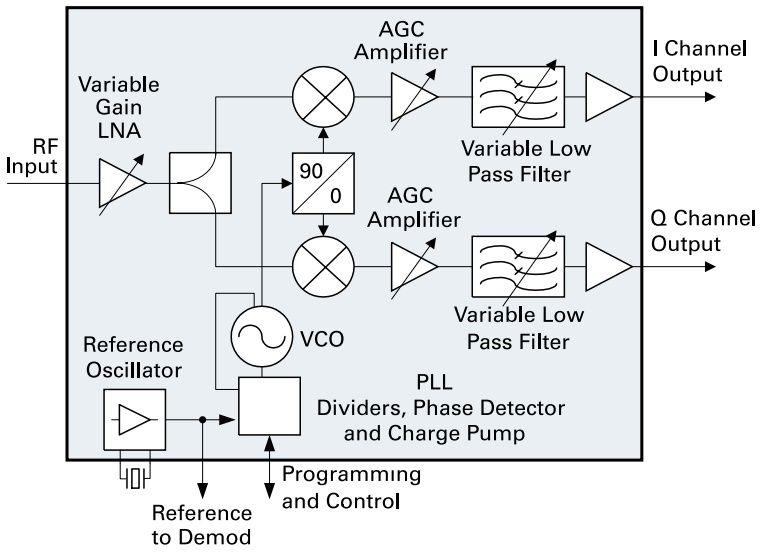

CX24109 Block Diagram

Distinguishing Features

- DVB/DSS/DCII – compliant
- Single-chip RF-to-baseband satellite receiver
- Zero-IF architecture eliminates the need for image-reject filtering
- Variable baseband filters for optimal interference rejection
- Integrated LNA and LO with onboard VCO and synthesizer
- Single +5V supply
- 48-pin ETQFP

Part Number CX24109
Description Digital Satellite Tuner

Downloaded from Elcodis.com electronic components distributor

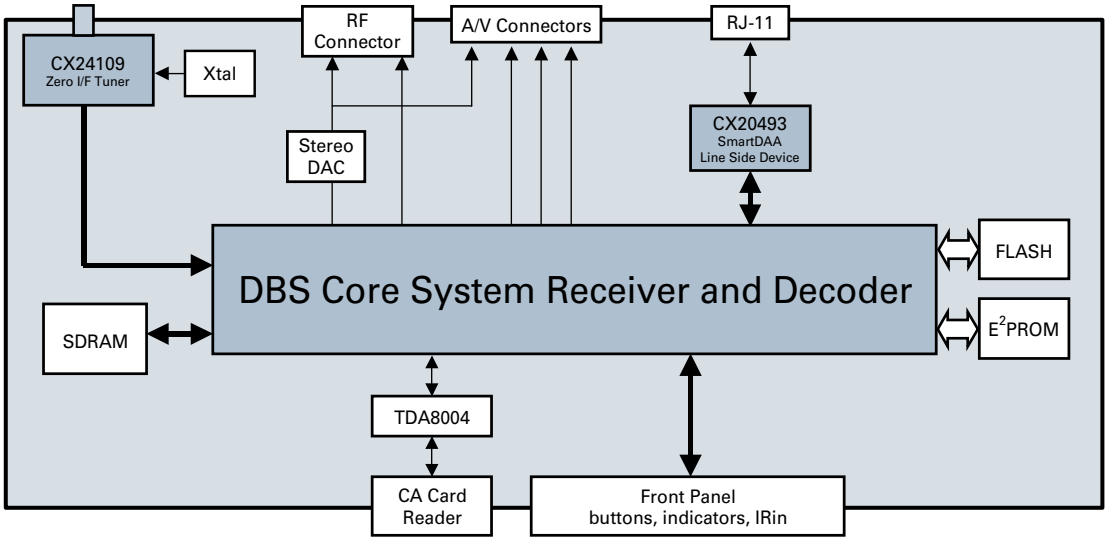

Complete IC System Solution for Worldwide DBS Platforms

CX24109 Product Features

- Single-chip RF-to-baseband satellite receiver
- Zero-IF architecture eliminates the need for image-reject filtering
- Integrated LNA
- Integrated LO with onboard VCO and synthesizer
- Variable baseband filters for optimal interference rejection
- Single +5V supply

Product Specifications

- RF input: 950 to 2150 MHz
- Input power range: -20 to -81 dBm
- Noise figure: 10 dB, typical
- Input IP3 at minimum gain: 10 dBm, typical
- I/Q phase difference: ±3 degrees, typical
- I/Q amplitude difference: ±1.5 dB, typical
- Filter tune range: 0.5 to 30 MHz
- Output voltage, RL≥1kΩ: 0.5 Vp-p
- Typical junction temperature: 90° C at room temperature
- Operating temperature range: 0° to 70° C
- Package type: 48-pin ETQFP

Applications

- DBS set-top boxes
- Commercial digital video, audio and data receivers
- Digital VCRs

© 2003, Conexant Systems, Inc. All Rights Reserved. Conexant and the Conexant logo are trademarks of Conexant Systems, Inc. All other trademarks are owned by their respective owners. Although Conexant strives for accuracy in all its publications, this material may contain errors or omissions and is subject to change without notice. **THIS MATERIAL IS PROVIDED AS IS AND WITHOUT ANY EXPRESS OR IMPLIED WARRANTIES, INCLUDING MERCHANTABILITY, FITNESS FOR A PARTICULAR PURPOSE AND NON-INFRINGEMENT.** Conexant shall not be liable for any special, indirect, incidental or consequential damages as a result of its use.

www.conexant.com
General Information:
U.S. and Canada: (800) 854-8099
International: (949) 483-6996
Headquarters – Newport Beach
4311 Jamboree Rd, P.O. Box C
Newport Beach, CA 92660-3095

Order# 102204A

CONEXANT

Downloaded from Elcodis.com electronic components distributor