1138 SERIES

Operating Voltage = 250/480 V~, 50 / 60 Hz
Operating Voltage = 125/208 V~, 50 – 400 Hz
Operating Current = 10, 15 Amp / Phase
Temperature Range = -20 TO 50 Deg. C
Diel. Withstand (L-CASE) = 1500 V~ FOR 1 MIN.
Diel. Withstand (L-L) = 1500 Vdc For 1 Min.
Leakage Current = 3.8 ma @ 250 V~, 60 Hz
Discharge Volt after 1.0 second = 24 V Max.
Maximum Capacitance each line to case = 0.02 ì F

Order P/N: 10 Amp: CC-1138-10
15 Amp: CC-1138-15

The 1138 series is a 3 phase WYE filter. This series is designed to be used with military systems which are requires to meet the conducted emissions of MIL STD-461C / CE03.
Minor modifications can be done to adjust the filter configuration in order to meet any special environmental or vibration specifications.

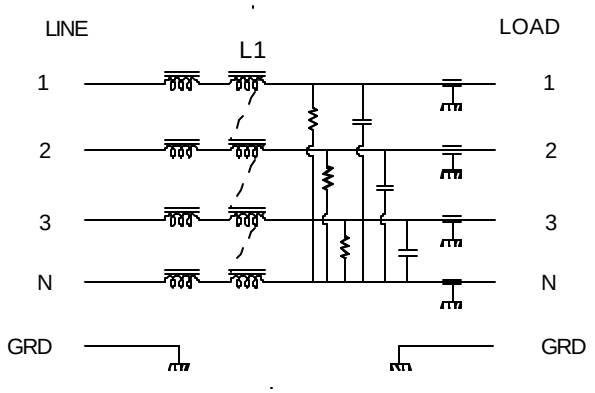

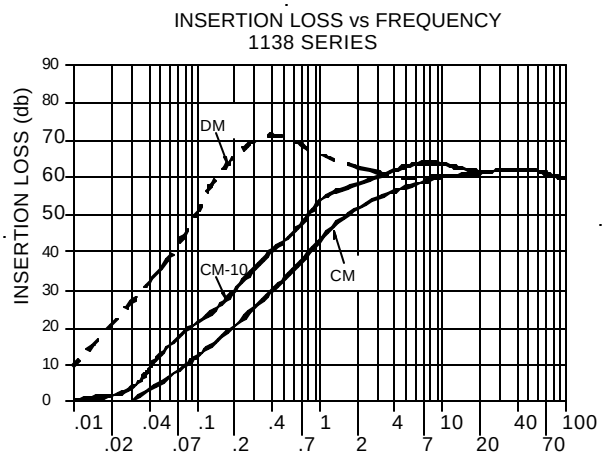

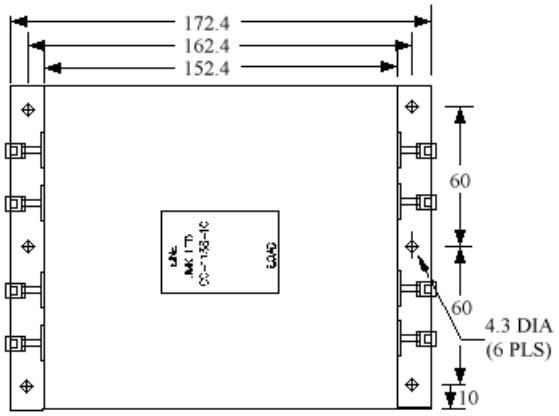

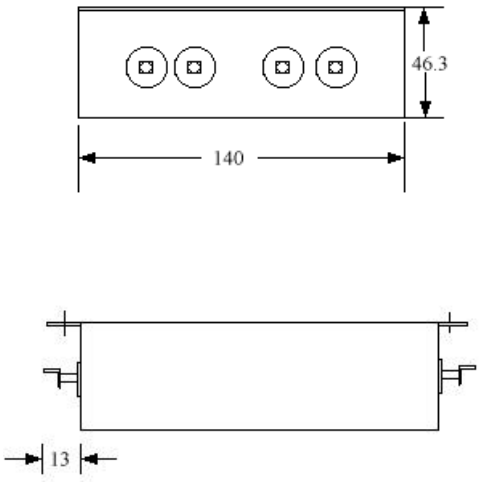

USA JMK Inc 15 Caldwell Dr. Amherst, NH 03031 PH: 603 886-4100 FX: 603 886-4115
email: info@jmkfilters.com
EUR JMK Glasgow G13 1DN Scotland UK PH: 44-(0) 7785310729 FX: 44-(0) 141 589 1884

Downloaded from Elcodis.com electronic components distributor