PRELIMINARY

Notice:This is not a final specification.
Some parametric limits are subject to change.

M62429P/FP

SERIAL DATA CONTROL DUAL ELECTRONIC VOLUME

DESCRIPTION

The M62429 is a dual channel electronic volume controlled with 2-wire serial data.
The built-in reference circuit can compose of an electronic volume with less external parts.

FEATURES

- Built-in reference circuit
- Control with serial data
  Volume 0 to -83dB (1dB/step), -∞
  (Independent control is allowed in each channel)
- Low noise and low distortion
  VNO = 5µVrms (ATT = -∞, JIS-A)
  THD = 0.01% Typ. (V0 = 0.5Vrms, DIN-AUDIO)

Outline 8P4 (P)
2.54mm pitch 300mil DIP
(6.3mmx8.9mmx3.3mm)

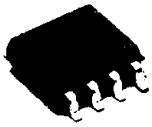

Outline 8P2S-A(FP)
1.27mm pitch 225mil SOP
(4.4mmx5.0mmx1.5mm)

RECOMMENDED OPERATING CONDITIONS

Supply voltage range.....Vcc = 4.5 to 5.5V
Rated supply voltage.....Vcc = 5V

SYSTEM CONFIGURATION

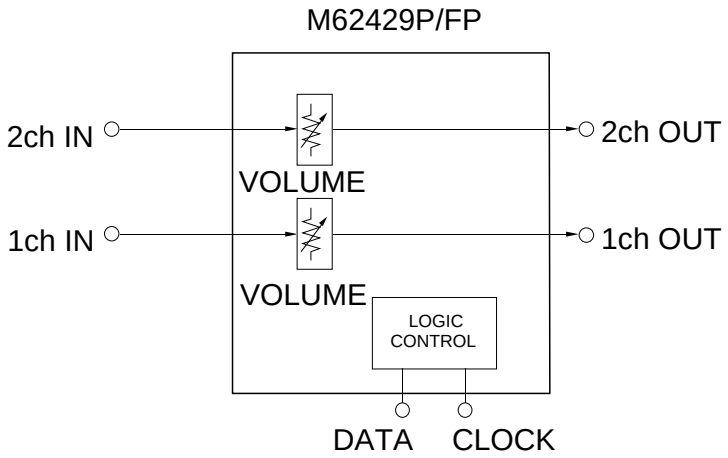

Downloaded from Elcodis.com electronic components distributor

PRELIMINARY
Notice:This is not a final specification.
Some parametric limits are subject to change.

PIN CONFIGURATION (TOP VIEW)

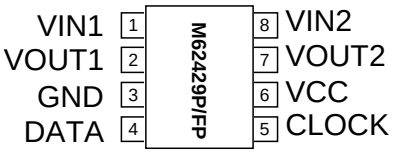

Outline 8P4(P)
8P2S-A(FP)

IC INTERNAL BLOCK DIAGRAM

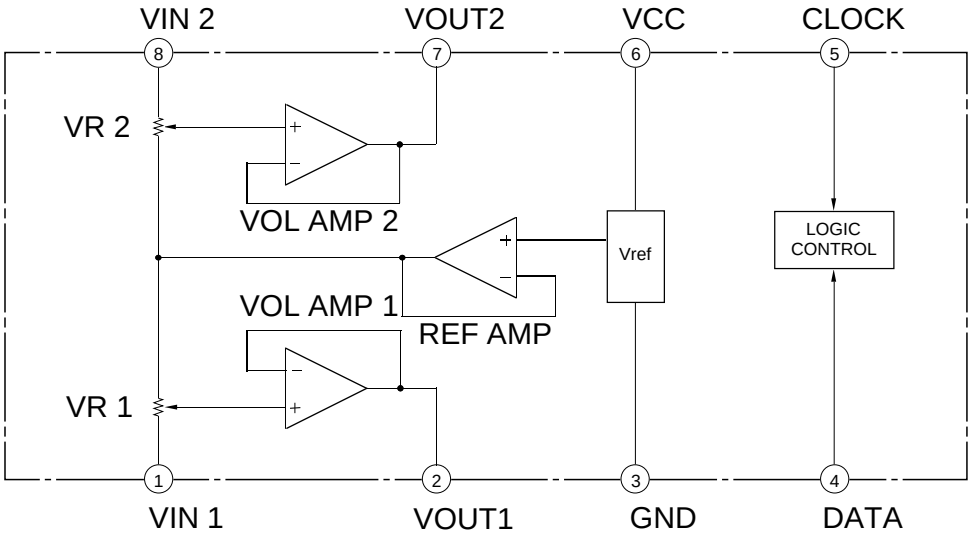

Downloaded from Elcodis.com electronic components distributor

PRELIMINARY
Notice:This is not a final specification.
Some parametric limits are subject to change.

PIN DESCRIPTION

Pin No.	Symbol	Function
①	$V_{IN\,1}$	1-ch input pin
②	V_{OUT1}	1-ch output pin
③	GND	Ground pin
④	DATA	Control data input pin. Inputs data in synchronization with clock.
⑤	CLOCK	Clock input pin for transferring serial data.
⑥	V_{CC}	Power supply pin. Stabilize the pin with decoupling capacitor.
⑦	V_{OUT2}	2-ch output pin
⑧	V_{IN2}	1-ch input pin

ABSOLUTE MAXIMUM RATINGS

Symbol	Parameter	Ratings	Unit
V_{CC}, V_{DD}	Supply voltage	6.0	V
P_d	Power dissipation	625(P), 440(FP)	mW
T_{opr}	Operating temperature	-20 to +75	°C
T_{stg}	Storage temperature	-55 to +125	°C

ELECTRICAL CHARACTERISTICS (Vcc = 5V, Ta = 25°C, unless otherwise noted)

Symbol	Parameter	Test conditions	Limits			Unit
			Min.	Typ.	Max.	
I_{CC}	Circuit current			8	16	mA
A_{TT}	Maximum attenuation	A_{TT}=-	-	-90	-80	dB
A_{TT}	Attenuation error	A_{TT}=0	-2.0	0	2.0	dB
V_{IM}	Maximum input voltage	THD=1%, A_{TT}=-6dB	1.5	1.7	-	Vrms
V_{OM}	Maximum output voltage	THD=1%	0.8	1.3	-	Vrms
$V_{NO}1$	Output noise voltage	A_{TT}=0, R_g=0, JIS-A	-	4	10	µVrms
$V_{NO}2$		A_{TT}=- , R_g=0, JIS-A	-	5	10	µVrms
THD	Total harmonic distortion	f=1kHz, V_O=0.5Vrms, A_{TT}=0	-	0.01	0.05	%
CS	Channel separation	f=1kHz, JIS-A	-	-80	-70	dB

RELATIONSHIP BETWEEN DATA AND CLOCK

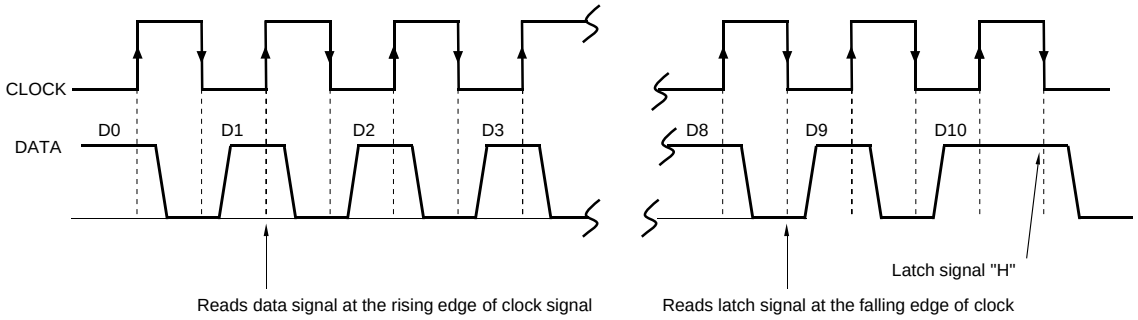

Downloaded from Elcodis.com electronic components distributor

PRELIMINARY
Notice:This is not a final specification.
Some parametric limits are subject to change.

DC CHARACTERISTICS OF DIGITAL BLOCK

Symbol	Parameter	Test conditions		Limits			Unit
				Min.	Typ.	Max.	
V_{IL}	"L" level input voltage	Data, clock pin		0	~	$0.2V_{CC}$	V
V_{IH}	"H" level input voltage			$0.8V_{CC}$	~	V_{CC}	V
I_{IL}	"L" level input current	V_I=0	Data, clock pin	-10	-	10	μA
I_{IH}	"H" level input current	V_I=5V		-	-	10	μA

AC CHARACTERISTICS OF DIGITAL BLOCK

Symbol	Parameter	Test conditions	Limits			Unit
			Min.	Typ.	Max.	
t_{cr}	Cycle time of clock		4	-	-	μs
t_{WHC}	Pulse width of clock ("H" level)		1.6	-	-	μs
t_{WLC}	Pulse width of clock ("L" level)		1.6	-	-	μs
t_r	Clock rising time		-	-	0.4	μs
t_f	Clock falling time		-	-	0.4	μs
t_{SD}	Data setup time		0.8	-	-	μs
t_{HD}	Data hold time		0.8	-	-	μs

CLOCK AND DATA TIMING

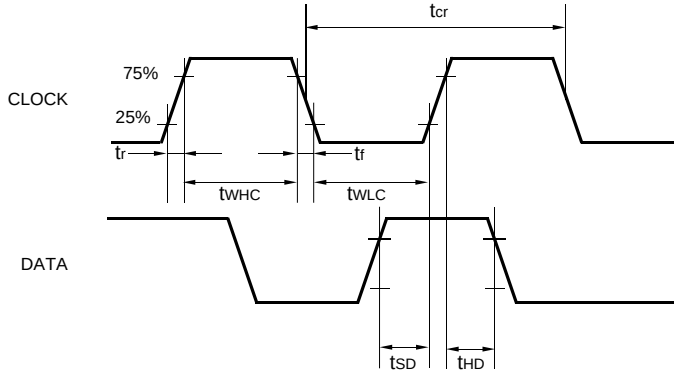

Downloaded from Elcodis.com electronic components distributor

PRELIMINARY
Notice:This is not a final specification.
Some parametric limits are subject to change.

DATA INPUT FORMAT

D0	D1	D2	D3	D4	D5	D6	D7	D8	D9	D10
0/1	0/1	VOLUME							1	1

0: Both channels at a time
1: A channel at a time

0:1CH
1:2CH

VOLUME CODE

ATT1	D2	D3	D4	D5	D6
0dB	H	L	H	L	H
-4dB	L	L	H	L	H
-8dB	H	H	L	L	H
-12dB	L	H	L	L	H
-16dB	H	L	L	L	H
-20dB	L	L	L	L	H
-24dB	H	H	H	H	L
-28dB	L	H	H	H	L
-32dB	H	L	H	H	L
-36dB	L	L	H	H	L
-40dB	H	H	L	H	L
-44dB	L	H	L	H	L
-48dB	H	L	L	H	L
-52dB	L	L	L	H	L
-56dB	H	H	H	L	L
-60dB	L	H	H	L	L
-64dB	H	L	H	L	L
-68dB	L	L	H	L	L
-72dB	H	H	L	L	L
-76dB	L	H	L	L	L
-80dB	H	L	L	L	L
-	L	L	L	L	L

ATT2	D7	D8
0dB	H	H
-1dB	L	H
-2dB	H	L
-3dB	L	L

Downloaded from Elcodis.com electronic components distributor

APPLICATION EXAMPLE

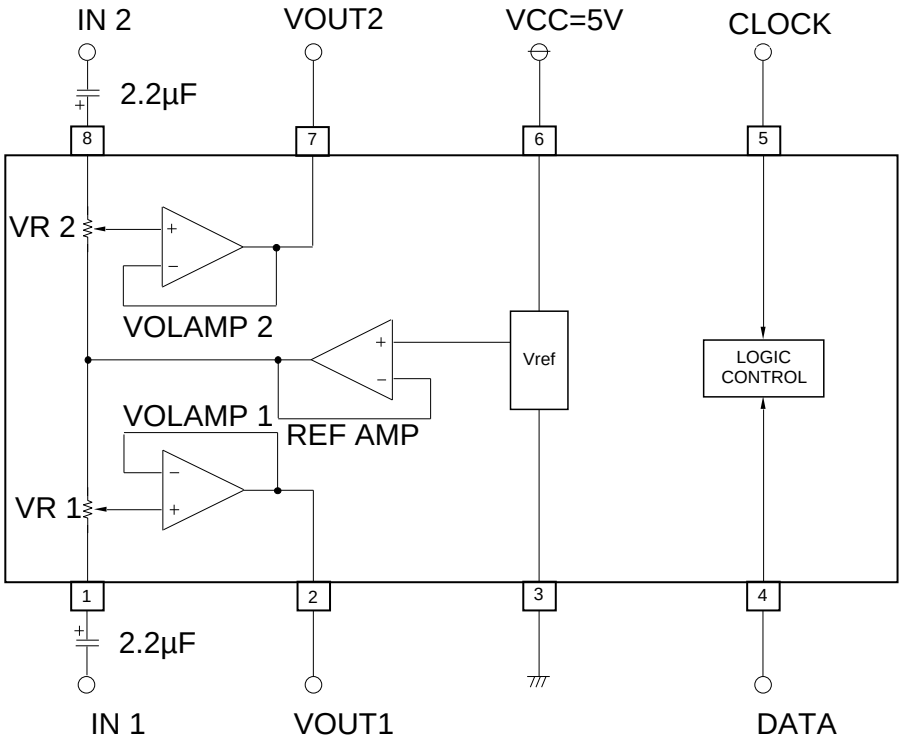

Units Resistance : Ω
Capacitance : F

Downloaded from Elcodis.com electronic components distributor