MC74HC132A

Quad 2-Input NAND Gate with Schmitt-Trigger Inputs

High–Performance Silicon–Gate CMOS

The MC74HC132A is identical in pinout to the LS132. The device inputs are compatible with standard CMOS outputs; with pullup resistors, they are compatible with LSTTL outputs.

The HC132A can be used to enhance noise immunity or to square up slowly changing waveforms.

- Output Drive Capability: 10 LSTTL Loads
- Outputs Directly Interface to CMOS, NMOS, and TTL
- Operating Voltage Range: 2.0 to 6.0 V
- Low Input Current: 1.0 µA
- High Noise Immunity Characteristic of CMOS Devices
- In Compliance with the Requirements Defined by JEDEC Standard No. 7A
- Chip Complexity: 72 FETs or 18 Equivalent Gates

LOGIC DIAGRAM

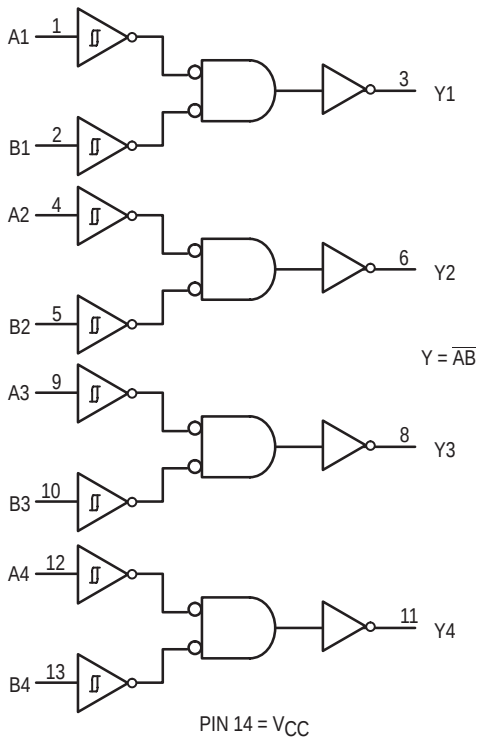

PIN 14 = V_{CC}
PIN 7 = GND

FUNCTION TABLE

Inputs		Output
A	B	Y
L	L	H
L	H	H
H	L	H
H	H	L

ON Semiconductor

http://onsemi.com

MARKING DIAGRAMS

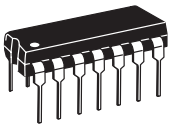

PDIP–14
N SUFFIX
CASE 646

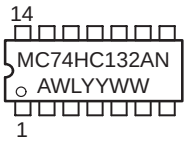

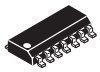

SOIC–14
D SUFFIX
CASE 751A

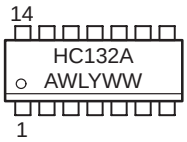

A = Assembly Location
WL or L = Wafer Lot
YY or Y = Year
WW or W = Work Week

PIN ASSIGNMENT

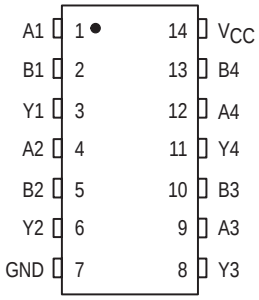

ORDERING INFORMATION

Device	Package	Shipping
MC74HC132AN	PDIP–14	2000 / Box
MC74HC132AD	SOIC–14	55 / Rail
MC74HC132ADR2	SOIC–14	2500 / Reel

© Semiconductor Components Industries, LLC, 2000

March, 2000 – Rev. 7

Publication Order Number:
MC74HC132A/D

Downloaded from Elcodis.com electronic components distributor

MAXIMUM RATINGS*

Symbol	Parameter	Value	Unit
V_{CC}	DC Supply Voltage (Referenced to GND)	– 0.5 to + 7.0	V
V_{in}	DC Input Voltage (Referenced to GND)	– 1.5 to V_{CC} + 1.5	V
V_{out}	DC Output Voltage (Referenced to GND)	– 0.5 to V_{CC} + 0.5	V
I_{in}	DC Input Current, per Pin	± 20	mA
I_{out}	DC Output Current, per Pin	± 25	mA
I_{CC}	DC Supply Current, V_{CC} and GND Pins	± 50	mA
P_D	Power Dissipation in Still Air, Plastic DIP† SOIC Package†	750 500	mW
T_{stg}	Storage Temperature	– 65 to + 150	°C
T_L	Lead Temperature, 1 mm from Case for 10 Seconds (Plastic DIP or SOIC Package)	260	°C

This device contains protection circuitry to guard against damage due to high static voltages or electric fields. However, precautions must be taken to avoid applications of any voltage higher than maximum rated voltages to this high–impedance circuit. For proper operation, V_{in} and V_{out} should be constrained to the range GND ≤ (V_{in} or V_{out}) ≤ V_{CC}.

Unused inputs must always be tied to an appropriate logic voltage level (e.g., either GND or V_{CC}). Unused outputs must be left open.

*Maximum Ratings are those values beyond which damage to the device may occur.
Functional operation should be restricted to the Recommended Operating Conditions.
†Derating — Plastic DIP: – 10 mW/°C from 65° to 125°C
SOIC Package: – 7 mW/°C from 65° to 125°C
For high frequency or heavy load considerations, see Chapter 2 of the ON Semiconductor High–Speed CMOS Data Book (DL129/D).

RECOMMENDED OPERATING CONDITIONS

Symbol	Parameter	Min	Max	Unit
V_{CC}	DC Supply Voltage (Referenced to GND)	2.0	6.0	V
V_{in}, V_{out}	DC Input Voltage, Output Voltage (Referenced to GND)	0	V_{CC}	V
T_A	Operating Temperature, All Package Types	– 55	+ 125	°C
t_r, t_f	Input Rise and Fall Time (Figure 1)	—	no limit*	ns

*When V_{in} ~ 0.5 V_{CC}, I_{CC} >> quiescent current.

DC ELECTRICAL CHARACTERISTICS (Voltages Referenced to GND)

Symbol	Parameter	Test Conditions	V_{CC} V	Guaranteed Limit 25°C	– 40°C to + 85°C	– 55°C to + 125°C	Unit
V_{T+} max	Maximum Positive–Going Input Threshold Voltage (Figure 3)	V_{out} = 0.1 V $\|I_{out}\|$ ≤ 20 μA	2.0 4.5 6.0	1.5 3.15 4.2	1.5 3.15 4.2	1.5 3.15 4.2	V
V_{T+} min	Minimum Positive–Going Input Threshold Voltage (Figure 3)	V_{out} = 0.1 V $\|I_{out}\|$ ≤ 20 μA	2.0 4.5 6.0	1.0 2.3 3.0	0.95 2.25 2.95	0.95 2.25 2.95	V
V_{T-} max	Maximum Negative–Going Input Threshold Voltage (Figure 3)	V_{out} = V_{CC} – 0.1 V $\|I_{out}\|$ ≤ 20 μA	2.0 4.5 6.0	0.9 2.0 2.6	0.95 2.05 2.65	0.95 2.05 2.65	V
V_{T-} min	Minimum Negative–Going Input Threshold Voltage (Figure 3)	V_{out} = V_{CC} – 0.1 V $\|I_{out}\|$ ≤ 20 μA	2.0 4.5 6.0	0.3 0.9 1.2	0.3 0.9 1.2	0.3 0.9 1.2	V
$V_H$max Note 2	Maximum Hysteresis Voltage (Figure 3)	V_{out} = 0.1 V or V_{CC} – 0.1 V $\|I_{out}\|$ ≤ 20 μA	2.0 4.5 6.0	1.2 2.25 3.0	1.2 2.25 3.0	1.2 2.25 3.0	V
$V_H$min Note 2	Minimum Hysteresis Voltage (Figure 3)	V_{out} = 0.1 V or V_{CC} – 0.1 V $\|I_{out}\|$ ≤ 20 μA	2.0 4.5 6.0	0.2 0.4 0.5	0.2 0.4 0.5	0.2 0.4 0.5	V

NOTE: 1. $V_H$min > (V_{T+} min) – (V_{T-} max); $V_H$max = (V_{T+} max) + (V_{T-} min).
NOTE: Information on typical parametric values can be found in Chapter 2 of the ON Semiconductor High–Speed CMOS Data Book (DL129/D).

Downloaded from Elcodis.com electronic components distributor

DC ELECTRICAL CHARACTERISTICS (Voltages Referenced to GND)

Symbol	Parameter	Test Conditions	V_{CC} V	Guaranteed Limit – 55 to 25°C	≤ 85°C	≤ 125°C	Unit
V_{OH}	Minimum High–Level Output Voltage	$V_{in} \le V_{T-}$ min or V_{T+} max $\lvert I_{out} \rvert \le 20\ \mu A$	2.0 4.5 6.0	1.9 4.4 5.9	1.9 4.4 5.9	1.9 4.4 5.9	V
		$V_{in} \le -V_{T-}$ min or V_{T+} max $\lvert I_{out} \rvert \le 4.0$ mA $\lvert I_{out} \rvert \le 5.2$ mA	4.5 6.0	3.98 5.48	3.84 5.34	3.7 5.2	
V_{OL}	Maximum Low–Level Output Voltage	$V_{in} \ge V_{T+}$ max $\lvert I_{out} \rvert \le 20\ \mu A$	2.0 4.5 6.0	0.1 0.1 0.1	0.1 0.1 0.1	0.1 0.1 0.1	V
		$V_{in} \ge V_{T+}$ max $\lvert I_{out} \rvert \le 4.0$ mA $\lvert I_{out} \rvert \le 5.2$ mA	4.5 6.0	0.26 0.26	0.33 0.33	0.4 0.4	
I_{in}	Maximum Input Leakage Current	$V_{in} = V_{CC}$ or GND	6.0	± 0.1	± 1.0	± 1.0	μA
I_{CC}	Maximum Quiescent Supply Current (per Package)	$V_{in} = V_{CC}$ or GND $I_{out} = 0\ \mu A$	6.0	1.0	10	40	μA

AC ELECTRICAL CHARACTERISTICS (C_L = 50 pF, Input $t_r = t_f$ = 6.0 ns)

Symbol	Parameter	V_{CC} V	Guaranteed Limit – 55 to 25°C	≤ 85°C	≤ 125°C	Unit
t_{PLH}, t_{PHL}	Maximum Propagation Delay, Input A or B to Output Y (Figures 1 and 2)	2.0 4.5 6.0	125 25 21	155 31 26	190 38 32	ns
t_{TLH}, t_{THL}	Maximum Output Transition Time, Any Output (Figures 1 and 2)	2.0 4.5 6.0	75 15 13	95 19 16	110 22 19	ns
C_{in}	Maximum Input Capacitance	—	10	10	10	pF

NOTE: For propagation delays with loads other than 50 pF, and information on typical parametric values, see Chapter 2 of the ON Semiconductor High–Speed CMOS Data Book (DL129/D).

		Typical @ 25°C, V_{CC} = 5.0 V	
C_{PD}	Power Dissipation Capacitance (Per Gate)*	24	pF

* Used to determine the no–load dynamic power consumption: $P_D = C_{PD} V_{CC}^2 f + I_{CC} V_{CC}$. For load considerations, see Chapter 2 of the ON Semiconductor High–Speed CMOS Data Book (DL129/D).

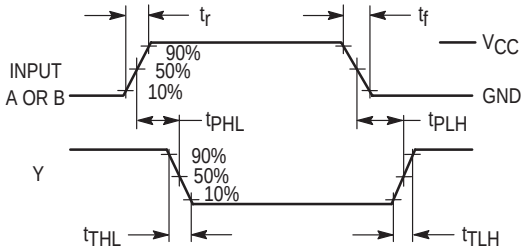

Figure 1. Switching Waveforms

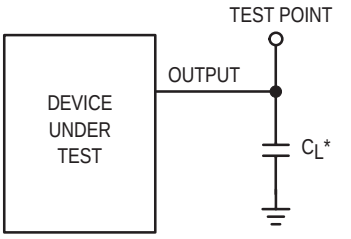

*Includes all probe and jig capacitance

Figure 2. Test Circuit

Downloaded from Elcodis.com electronic components distributor

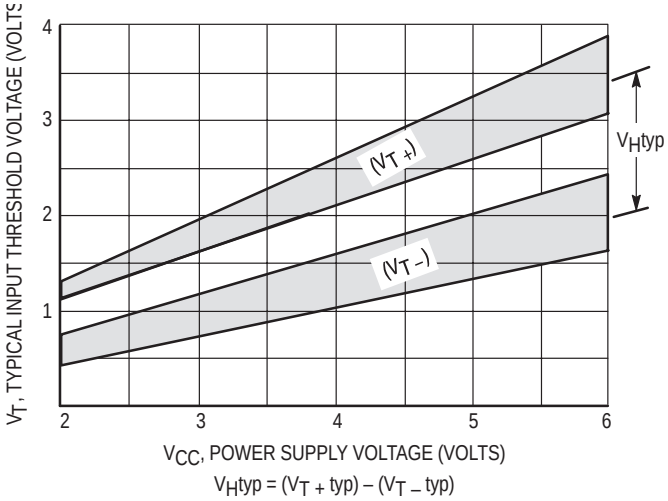

Figure 3. Typical Input Threshold, V_{T+}, V_{T-} Versus Power Supply Voltage

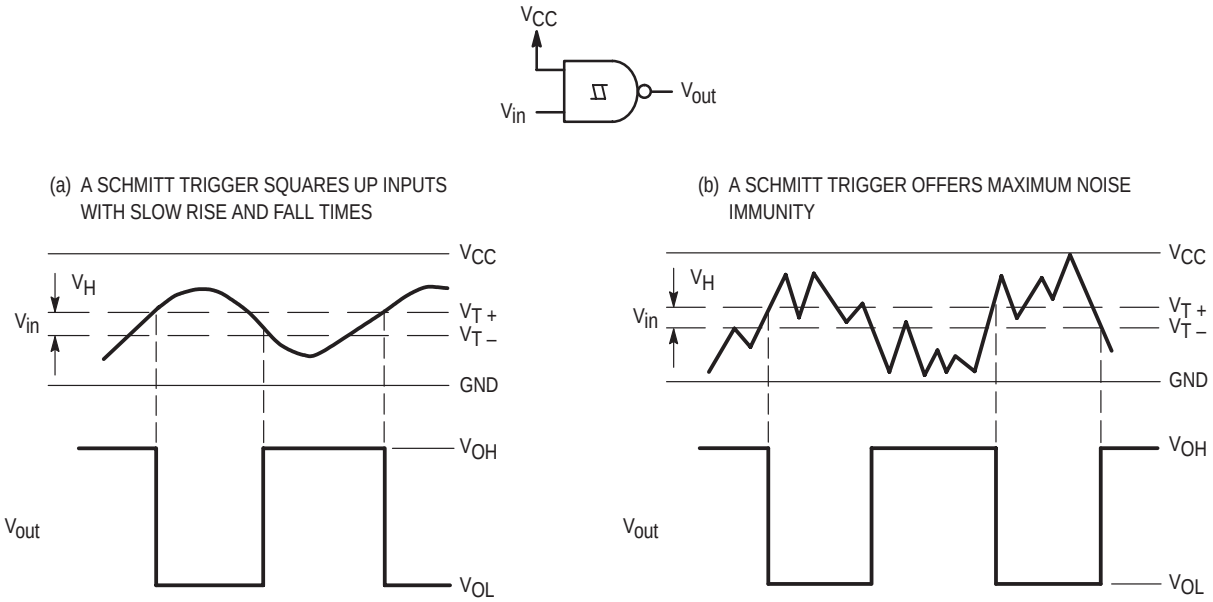

Figure 4. Typical Schmitt–Trigger Applications

Downloaded from Elcodis.com electronic components distributor

PACKAGE DIMENSIONS

PDIP–14
N SUFFIX
CASE 646–06
ISSUE L

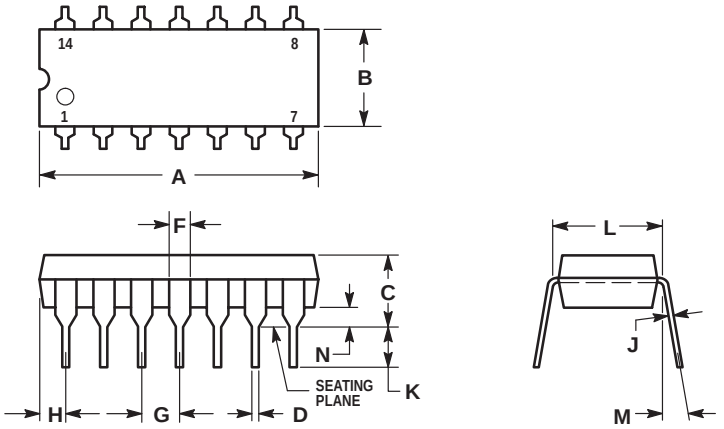

NOTES:
1. LEADS WITHIN 0.13 (0.005) RADIUS OF TRUE POSITION AT SEATING PLANE AT MAXIMUM MATERIAL CONDITION.
2. DIMENSION L TO CENTER OF LEADS WHEN FORMED PARALLEL.
3. DIMENSION B DOES NOT INCLUDE MOLD FLASH.
4. ROUNDED CORNERS OPTIONAL.

	INCHES		MILLIMETERS	
DIM	MIN	MAX	MIN	MAX
A	0.715	0.770	18.16	19.56
B	0.240	0.260	6.10	6.60
C	0.145	0.185	3.69	4.69
D	0.015	0.021	0.38	0.53
F	0.040	0.070	1.02	1.78
G	0.100 BSC		2.54 BSC	
H	0.052	0.095	1.32	2.41
J	0.008	0.015	0.20	0.38
K	0.115	0.135	2.92	3.43
L	0.300 BSC		7.62 BSC	
M	0°	10°	0°	10°
N	0.015	0.039	0.39	1.01

SOIC–14
D SUFFIX
CASE 751A–03
ISSUE F

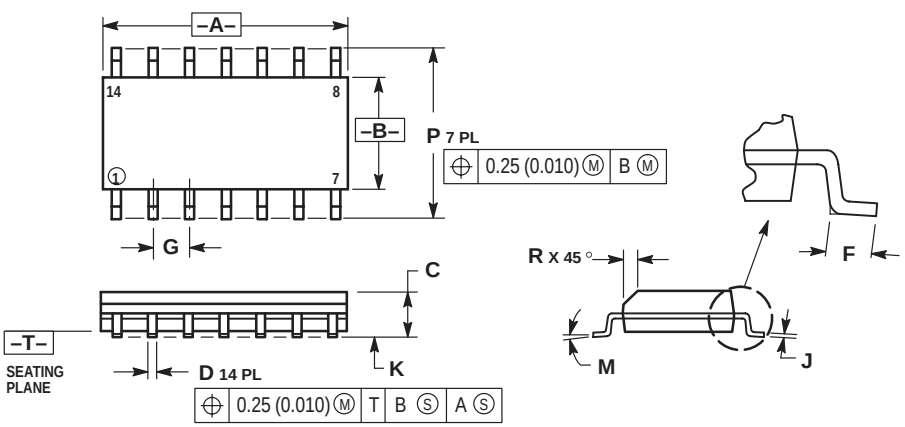

NOTES:
1. DIMENSIONING AND TOLERANCING PER ANSI Y14.5M, 1982.
2. CONTROLLING DIMENSION: MILLIMETER.
3. DIMENSIONS A AND B DO NOT INCLUDE MOLD PROTRUSION.
4. MAXIMUM MOLD PROTRUSION 0.15 (0.006) PER SIDE.
5. DIMENSION D DOES NOT INCLUDE DAMBAR PROTRUSION. ALLOWABLE DAMBAR PROTRUSION SHALL BE 0.127 (0.005) TOTAL IN EXCESS OF THE D DIMENSION AT MAXIMUM MATERIAL CONDITION.

	MILLIMETERS		INCHES	
DIM	MIN	MAX	MIN	MAX
A	8.55	8.75	0.337	0.344
B	3.80	4.00	0.150	0.157
C	1.35	1.75	0.054	0.068
D	0.35	0.49	0.014	0.019
F	0.40	1.25	0.016	0.049
G	1.27 BSC		0.050 BSC	
J	0.19	0.25	0.008	0.009
K	0.10	0.25	0.004	0.009
M	0°	7°	0°	7°
P	5.80	6.20	0.228	0.244
R	0.25	0.50	0.010	0.019

Downloaded from Elcodis.com electronic components distributor

Notes

Downloaded from Elcodis.com electronic components distributor

Notes

Downloaded from Elcodis.com electronic components distributor

ON Semiconductor and are trademarks of Semiconductor Components Industries, LLC (SCILLC). SCILLC reserves the right to make changes without further notice to any products herein. SCILLC makes no warranty, representation or guarantee regarding the suitability of its products for any particular purpose, nor does SCILLC assume any liability arising out of the application or use of any product or circuit, and specifically disclaims any and all liability, including without limitation special, consequential or incidental damages. "Typical" parameters which may be provided in SCILLC data sheets and/or specifications can and do vary in different applications and actual performance may vary over time. All operating parameters, including "Typicals" must be validated for each customer application by customer's technical experts. SCILLC does not convey any license under its patent rights nor the rights of others. SCILLC products are not designed, intended, or authorized for use as components in systems intended for surgical implant into the body, or other applications intended to support or sustain life, or for any other application in which the failure of the SCILLC product could create a situation where personal injury or death may occur. Should Buyer purchase or use SCILLC products for any such unintended or unauthorized application, Buyer shall indemnify and hold SCILLC and its officers, employees, subsidiaries, affiliates, and distributors harmless against all claims, costs, damages, and expenses, and reasonable attorney fees arising out of, directly or indirectly, any claim of personal injury or death associated with such unintended or unauthorized use, even if such claim alleges that SCILLC was negligent regarding the design or manufacture of the part. SCILLC is an Equal Opportunity/Affirmative Action Employer.

PUBLICATION ORDERING INFORMATION

NORTH AMERICA Literature Fulfillment:
Literature Distribution Center for ON Semiconductor
P.O. Box 5163, Denver, Colorado 80217 USA
Phone: 303–675–2175 or 800–344–3860 Toll Free USA/Canada
Fax: 303–675–2176 or 800–344–3867 Toll Free USA/Canada
Email: ONlit@hibbertco.com
Fax Response Line: 303–675–2167 or 800–344–3810 Toll Free USA/Canada

N. American Technical Support: 800–282–9855 Toll Free USA/Canada

EUROPE: LDC for ON Semiconductor – European Support
German Phone: (+1) 303–308–7140 (M–F 1:00pm to 5:00pm Munich Time)
Email: ONlit–german@hibbertco.com
French Phone: (+1) 303–308–7141 (M–F 1:00pm to 5:00pm Toulouse Time)
Email: ONlit–french@hibbertco.com
English Phone: (+1) 303–308–7142 (M–F 12:00pm to 5:00pm UK Time)
Email: ONlit@hibbertco.com

EUROPEAN TOLL–FREE ACCESS*: 00–800–4422–3781
*Available from Germany, France, Italy, England, Ireland

CENTRAL/SOUTH AMERICA:
Spanish Phone: 303–308–7143 (Mon–Fri 8:00am to 5:00pm MST)
Email: ONlit–spanish@hibbertco.com

ASIA/PACIFIC: LDC for ON Semiconductor – Asia Support
Phone: 303–675–2121 (Tue–Fri 9:00am to 1:00pm, Hong Kong Time)
Toll Free from Hong Kong & Singapore:
001–800–4422–3781
Email: ONlit–asia@hibbertco.com

JAPAN: ON Semiconductor, Japan Customer Focus Center
4–32–1 Nishi–Gotanda, Shinagawa–ku, Tokyo, Japan 141–8549
Phone: 81–3–5740–2745
Email: r14525@onsemi.com

ON Semiconductor Website: http://onsemi.com

For additional information, please contact your local Sales Representative.

Downloaded from Elcodis.com electronic components distributor