Dual Inline Memory Module (DIMM, 184 pins)

Specifications

Insulation Resistance:	1,000MΩ min. at 500V DC
Dielectric Withstanding Voltage:	700V AC for 1 minute
Contact Resistance:	30mΩ max. at 10mA/20mV max.
Operating Temperature Range:	–55°C to +170°C
Mating Cycles:	10,000 insertions minimum
Pin Count:	184 contact pins

Part Number (Details)

IC-589 - 1 - MF

- Series No.
- Design No.
- MF = Flanged
  Unmarked = Not Flanged

Materials and Finish

Housing: Polyetherimide (PEI), glass-filled
Contacts: Beryllium Copper (BeCu)
Plating: Gold over Nickel

Features

- Card thickness 1.27mm
- For 184 contact pins with 1.27mm pitch

Outline Socket Dimensions

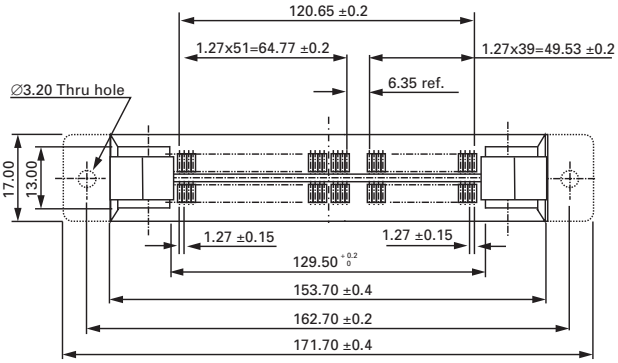

Recommended PC Board Layout

Top View from Socket

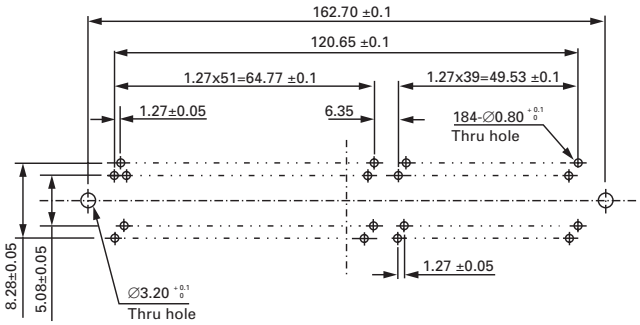

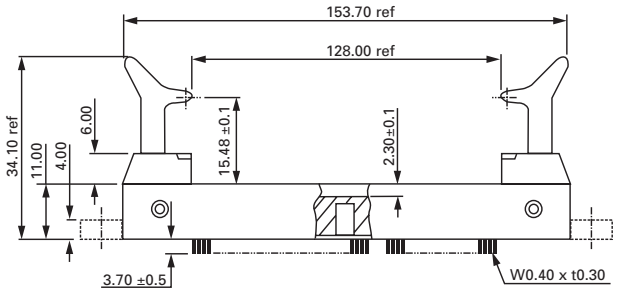

Matching Module Dimensions

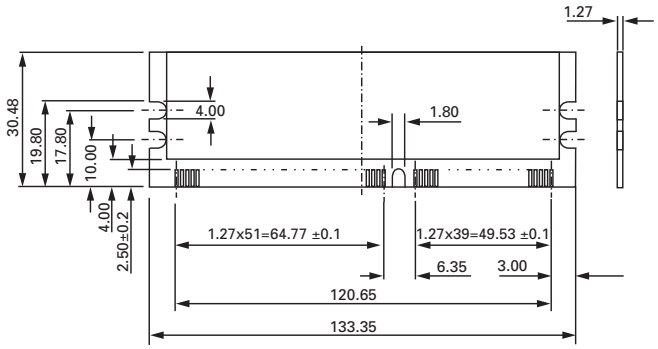

SPECIFICATIONS ARE SUBJECT TO ALTERATION WITHOUT PRIOR NOTICE – DIMENSIONS IN MILLIMETER
YAMAICHI ELECTRONICS
Downloaded from Elcodis.com electronic components distributor