cynergy3 components™

SSF29

high pressure internal side mount

The SSF29 series is a horizontally mounted device designed to achieve reliable switching at higher pressures. Mounting is in the side of the tank from the inside, so requires access to the inside of the tank.

This type is capable of working at pressures of up to 40 bar.

They are manufactured in 316 grade Stainless Steel, for those liquids and environments that require the use of Stainless Steel and will work in liquids of SG 0.7 minimum.

The switch action may be reversed by removing the foat, inverting it and then reftting it to the stem.

- ***Stainless steel***
- ***Internal mounting***
- ***Temperature range to 120°C***
- ***Pressure up to 40 bar***
- ***User configurable N/O or N/C action***

Technical Specification			
Mounting style	Internal	Cable length - standard	1000mm
Mounting thread	1/8" BSP	Cable size	17/0.10 - AWG22
Float & Stem material	316 grade	Cable conductor material	Tinned copper
Maximum Temperature	120°C	Cable sheath material	XLPE
Maximum Pressure	40 bar	Cable temperature rating	125°C
Float SG	0.6	Sealing gasket	Not supplied
Minimum fuid SG	0.7	Tightening torque for fixing nut	2.0kg/cm

Electrical Specification	
Contact Form	N/O or N/C
Switching Power Max. VA	50
Switching Current Max. A	0.5
Switching Voltage AC	300
Switching Voltage DC	300
Breakdown Voltage Min. DC	600

All ratings are for resistive load only.

Standard Parts	Leadouts
SSF29X100	100cm XLPE wires

Mechanical Dimensions

All dimensions are in millimeters (inches)

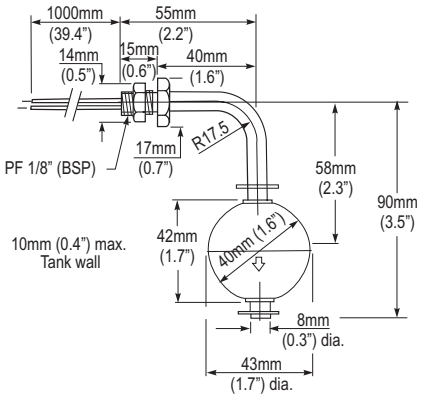

USA
Cynergy3 Components
11125 Knott Avenue, Suite D
San Diego, CA 90630
Sales & Tech Support (866) 258-5057
Email: sales@cynergy3.com

EUROPE - UK
Cynergy3 Components Ltd.
7 Cobham Road
Ferndown Industrial Estate
Wimborne, Dorset BH21 7PE
Telephone +44 (0) 1202 897969
Fax +44 (0) 1202 891918
Email:sales@cynergy3.com

ISO9001 CERTIFIED

www.cynergy3.com

© 2010 Cynergy3 Components, All Rights Reserved. Specifications ar subject to change without prior notice. Cynergy3 Components and the Cynergy3 Components logo are trademarks of Cynergy3 Components Limited.

Downloaded from Elcodis.com electronic components distributor