ACPM-5011

UMTS/LTE Band11 + Band21 (1427.9 - 1462.9 MHz)
3 x 3 mm Power Amplifier Module

Data Sheet

Description

The ACPM-5011 is a fully matched 10-pin surface mount module developed for UMTS and LTE at Band11 and Band 21. This power amplifier module operates in the 1427.9-1462.9 MHz bandwidth. The ACPM-5011 meets stringent LTE (MPR = 0 dB) and HSPA+ linearity requirements up to 27.5 dBm output power. The 3 x 3 mm form factor package is self contained, incorporating 50 ohm input and output matching networks.

The ACPM-5011 features 5th generation of CoolPAM circuit technology which supports 3 power modes – bypass, mid and high power modes. The CoolPAM is stage bypass technology enhancing PAE (power added efficiency) at low and medium power range. Active bypass feature is added to 5th generation to enhance PAE further at low output range. This helps to extend talk time.

A directional coupler is integrated into the module and both coupling and isolation ports are available externally, supporting daisy chain. The integrated coupler has excellent coupler directivity, which minimizes the coupled output power variation or delivered power variation caused by the load mismatch from the antenna. The coupler directivity, or the output power variation into the mismatched load, is critical to the TRP and SAR performance of the mobile phones in real field operations as well as compliance tests for the system specifications.

The ACPM-5011 has integrated on-chip Vref and on-module bias switch as the one of the key features of the CoolPAM-5, so an external constant voltage source is not required, eliminating the external LDO regulators and switches from circuit boards of mobile devices. It also makes the PA fully digital-controllable by the Ven pin that simply turns the PA on and off from the digital control logic input from baseband chipsets. All of the digital control input pins such as the Ven, Vmode and Vbp are fully CMOS compatible and can operate down to the 1.35 V logic. The current consumption by digital control pins is negligible.

The power amplifier is manufactured on an advanced InGaP HBT (hetero-junction Bipolar Transistor) MMIC (microwave monolithic integrated circuit) technology offering state-of-the-art reliability, temperature stability and ruggedness.

Features

- Thin Package (0.9 mm typ)
- Excellent Linearity
- 3-mode power control with Vbp and Vmode
- Bypass / Mid Power Mode / High Power Mode
- High Efficiency at max output power
- 10-pin surface mounting package
- Internal 50 ohm matching networks for both RF input and output
- Integrated coupler
- Coupler and Isolation ports for daisy chain
- Green – Lead-free and RoHS complian

Applications

- UMTS(HSPA+)/LTE Handset for Band11 and Band 21

Ordering Information

Part Number	Number of Devices	Container
ACPM-5011-TR1	1000	178 mm (7") Tape/Reel
ACPM-5011-BLK	100	Bulk

Downloaded from Elcodis.com electronic components distributor

Absolute Maximum Ratings

No damage assuming only one parameter is set at limit at a time with all other parameters set at or below nominal value.

Operation of any single parameter outside these conditions with the remaining parameters set at or below nominal values may result in permanent damage.

Description	Min.	Typ.	Max.	Unit
RF Input Power (Pin)		0	10.0	dBm
DC Supply Voltage (Vcc1, Vcc2)	0	3.4	5.0	V
Enable Voltage (Ven)	0	2.6	3.3	V
Mode Control Voltage (Vmode)	0	2.6	3.3	V
Bypass Control (Vbp)	0	2.6	3.3	V
Storage Temperature (Tstg)	-55	25	+125	℃

Recommended Operating Condition

Description		Min.	Typ.	Max.	Unit
DC Supply Voltage (Vcc1, Vcc2)		3.2	3.4	4.2	V
Enable Voltage (Ven)	Low	0	0	0.5	V
	High	1.35	2.6	3.1	V
Mode Control Voltage (Vmode)	Low	0	0	0.5	V
	High	1.35	2.6	3.1	V
Bypass Control Voltage (Vbp)	Low	0	0	0.5	V
	High	1.35	2.6	3.1	V
Operating Frequency (fo)		1427.9		1462.9	MHz
Ambient Temperature (Ta)		-20	25	90	℃

Operating Logic Table

Power Mode	Ven	Vmode	Vbp	Pout (UMTS Rel99)	Pout (LTE MPR = 0 dB, HSPA+)
High Power Mode	High	Low	Low	~ 28.5 dBm	~ 27.5 dBm
Mid Power Mode	High	High	Low	~ 17 dBm	~ 16 dBm
Bypass Mode	High	High	High	~ 7 dBm	~ 6 dBm
Shut Down Mode	Low	Low	Low	–	–

Downloaded from Elcodis.com electronic components distributor

Electrical Characteristics

– Conditions: Vcc = 3.4 V, Ven = 2.6 V, Ta = 25° C, Zin/Zout = 50 ohm

Common Characteristics for LTE and UMTS	Condition	Min.	Typ.	Max.	Unit
Operating Frequency Range		1427.9	–	1462.9	MHz
Quiescent Current	High Power Mode	69	92	120	mA
	Mid Power Mode	9	16	25	mA
	Bypass Mode	1	3	5	mA
Enable Current	High Power Mode		4	100	µA
	Mid Power Mode		4	100	µA
	Bypass Mode		4	100	µA
Mode Control Current	Mid Power Mode		2.8	100	µA
	Bypass Mode		3.8	100	µA
Bypass Control Current	Bypass		3.8	100	µA
Total Current in Power-down mode	Ven = 0 V, Vmode = 0 V, Vbp = 0 V			10	µA
Input VSWR			2:1		
Stability (Spurious Output)	VSWR 5:1, All phase		-70		dBc
Phase Discontinuity	low power mode ↔ mid power mode, at Pout = 7 dBm		15		deg
	mid power mode ↔ high power mode, at Pout = 16 dBm		3		deg
Ruggedness	Pout <27.5 dBm, Pin <10 dBm, All phase High Power Mode		10:1		VSWR
Coupling factor	RF Out to CPL port		20		dB
Daisy Chain Insertion Loss	ISO port to CPL port, 698 - 2620 MHz, Ven = Low			0.25	dB

Characteristics for UMTS		Condition	Min.	Typ.	Max.	Unit
Operating Frequency Range			1427.9	–	1462.9	MHz
Maximum Output Power (UMTS Rel99)		High Power Mode	28.5			dBm
		Mid Power Mode	17			dBm
		Bypass Mode	7			dBm
Maximum Output Power (HSPA+, MPR = 0 dB)		High Power Mode	27.5			dBm
		Mid Power Mode	16			dBm
		Bypass Mode	6			dBm
Gain		High Power Mode, Pout = 27.5 dBm	25	28.5		dB
		Mid Power Mode, Pout = 16 dBm	13	17.5		dB
		Bypass Mode, Pout = 6 dBm	8	12		dB
Power Added Efficiency		High Power Mode, Pout = 28.5 dBm, Rel99		41		%
		High Power Mode, Pout = 27.5 dBm, HSPA+, MPR = 0 dB	33.7	37.5	41.3	%
		Mid Power Mode, Pout = 16 dBm	15.1	20.9	27.4	%
		Bypass Mode, Pout = 6 dBm	3.1	6.5	11	%
Total Supply Current		High Power Mode, Pout = 27.5 dBm	400	440	490	mA
		Mid Power Mode, Pout = 16 dBm	42	55	76	mA
		Bypass Mode, Pout = 6 dBm	10	17	35	mA
Adjacent Channel Leakage Ratio	ACLR1	Pout < (maximum power – MPR), High Power Mode		-38	-36	dBc
	ACLR2	Pout < (maximum power – MPR), High Power Mode		-55	-46	dBc
Harmonic Suppression	Second	High Power Mode, Pout = 27.5 dBm		-39	-35	dBc
	Third			-52	-42	dBc
Rx Band Noise Power (Vcc = 4.2 V)		High Power Mode, Pout = 27.5 dBm		-136.5	-135	dBm/Hz
GPS Band Noise Power (Vcc = 4.2 V)		High Power Mode, Pout = 27.5 dBm		-136.5	-135	dBm/Hz
ISM Band Noise Power (Vcc = 4.2 V)		High Power Mode, Pout = 27.5 dBm		-153	-143	dBm/Hz

Downloaded from Elcodis.com electronic components distributor

Electrical Characteristics (Continued)

Characteristics for LTE (Band 11 and Band21)		**Condition**	**Min.**	**Typ.**	**Max.**	**Unit**
Operating Frequency Range			1427.9	–	1462.9	MHz
Maximum Output Power (LTE, MPR = 0 dB)		High Power Mode	27.5			dBm
		Mid Power Mode	16			dBm
		Bypass Mode	6			dBm
Gain		High Power Mode, Pout ≤ (max power - MPR)	25	28.5		dB
		Mid Power Mode, Pout ≤ (max power - MPR)	13	17.5		dB
		Bypass Mode, Pout ≤ (max power - MPR)	8	12		dB
Power Added Efficiency		High Power Mode, Pout = 27.5 dBm (MPR = 0 dB)	33.7	37.1	41.3	%
		High Power Mode, Pout = 26.5 dBm (MPR = 1 dB)	30.2	34	37	%
		Mid Power Mode, Pout = 16 dBm (MPR = 0 dB)	15.5	21.1	27.6	%
		Bypass Mode, Pout = 6 dBm (MPR = 0 dB)	3.1	6.1	11	%
Total Supply Current		High Power Mode, Pout = 27.5 dBm (MPR = 0 dB)	400	445	490	mA
		High Power Mode, Pout = 26.5 dBm (MPR = 1 dB)	355	390	435	mA
		Mid Power Mode, Pout = 16 dBm (MPR = 0 dB)	42	55	76	mA
		Bypass Mode, Pout = 6 dBm (MPR = 0 dB)	10	18	35	mA
LTE Adjacent Channel Leakage Ratio	$E\text{-}UTRA_{ACLR}$	Pout < (maximum power – MPR), High Power Mode		-37	-33	dBc
	$UTRA_{ACLR1}$	Pout < (maximum power – MPR), High Power Mode		-43	-36	dBc
	$UTRA_{ACLR2}$	Pout < (maximum power – MPR), High Power Mode		-57	-39	dBc
Harmonic Suppression	Second Third	High Power Mode, Pout = 27.5 dBm		-39 -52	-35 -42	dBc dBc
Rx Band Noise Power (Vcc = 4.2 V)		B11 High Power Mode, Pout = 26.5 dBm, 25RB, Ch_BW = 10 MHz (averaging across 9 MHz) B21 High Power Mode, Pout = 26.5 dBm, 25RB, Ch_BW = 15 MHz (averaging across 13.5 MHz)		-136.5 -133.5	-135 -132	dBm/Hz
GPS Band Noise Power (Vcc = 4.2 V)		B11 High Power Mode, Pout = 26.5 dBm, 50RB B21 High Power Mode, Pout = 26.5 dBm, 75RB		-136.5 -135	-135 -133	dBm/Hz
ISM Band Noise Power (Vcc = 4.2 V)		High Power Mode		-153	-143	dBm/Hz

Downloaded from Elcodis.com electronic components distributor

Footprint

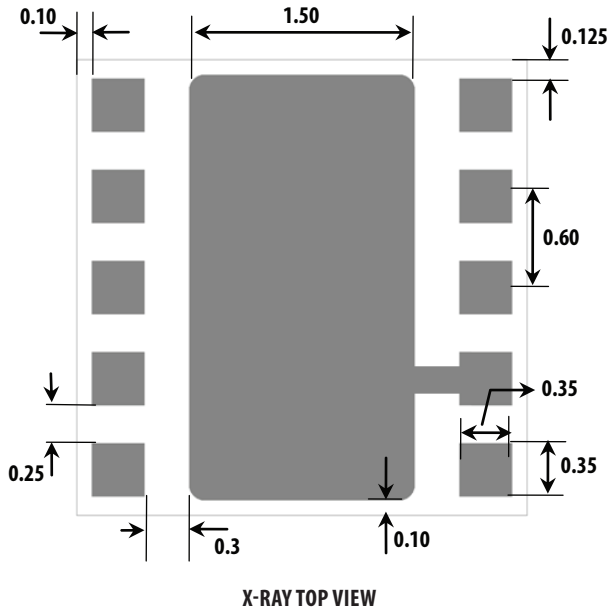

All dimensions are in millimeter

PIN Description

Pin #	Name	Description
1	Vcc1	DC Supply Voltage
2	RFin	RF Input
3	Vbp	Bypass Control
4	Vmode	Mode Control
5	Ven	PA Enable
6	CPL	Coupling port of Coupler
7	GND	Ground
8	ISO	Isolation port of Coupler
9	RFOut	RF Out
10	Vcc2	DC Supply Voltage

Package Dimensions

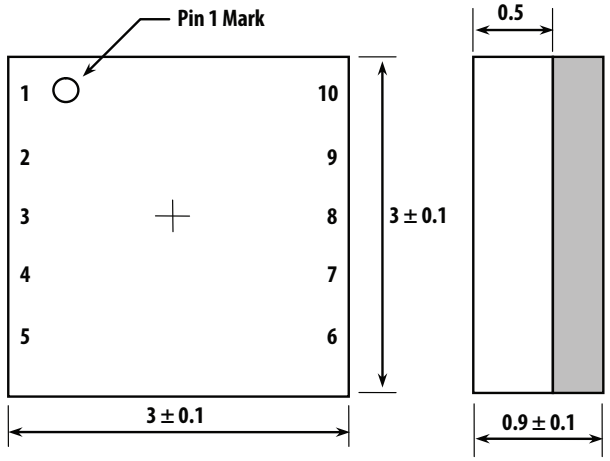

All dimensions are in millimeter

Marking Specification

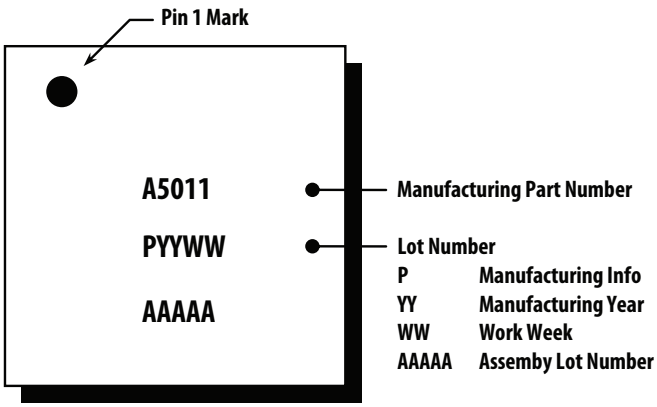

Downloaded from Elcodis.com electronic components distributor

Metallization

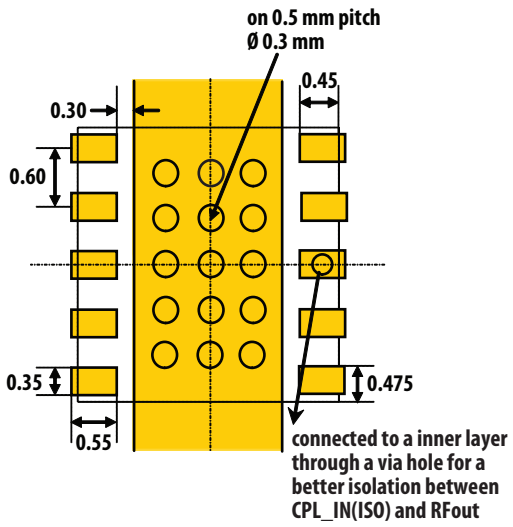

Solder Mask Opening

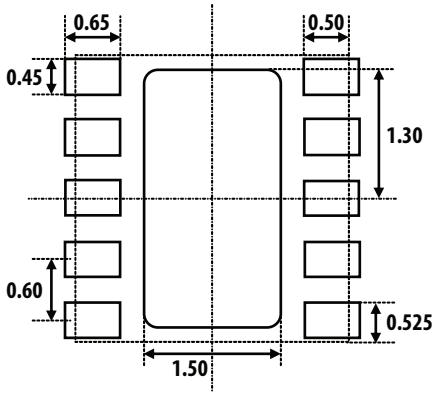

Solder Paste Stencil Aperture

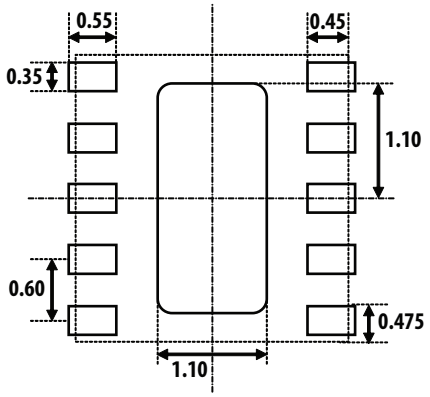

PCB Design Guidelines

The recommended PCB land pattern is shown in figures on the left side. The substrate is coated with solder mask between the I/O and conductive paddle to protect the gold pads from short circuit that is caused by solder bleeding/bridging.

Stencil Design Guidelines

A properly designed solder screen or stencil is required to ensure optimum amount of solder paste is deposited onto the PCB pads.

The recommended stencil layout is shown here. Reducing the stencil opening can potentially generate more voids. On the other hand, stencil openings larger than 100% will lead to excessive solder paste smear or bridging across the I/O pads or conductive paddle to adjacent I/O pads. Considering the fact that solder paste thickness will directly affect the quality of the solder joint, a good choice is to use laser cut stencil composed of 0.100 mm(4 mils) or 0.127 mm (5 mils) thick stainless steel which is capable of producing the required fine stencil outline.

Downloaded from Elcodis.com electronic components distributor

Evaluation Board Schematic

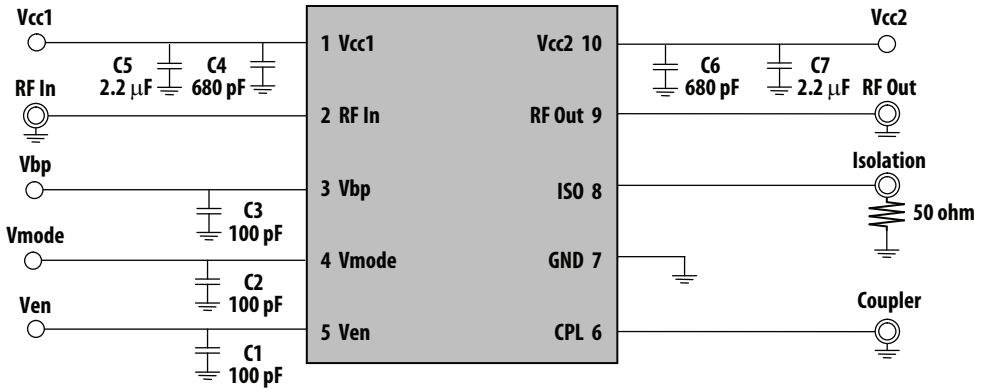

Evaluation Board Description

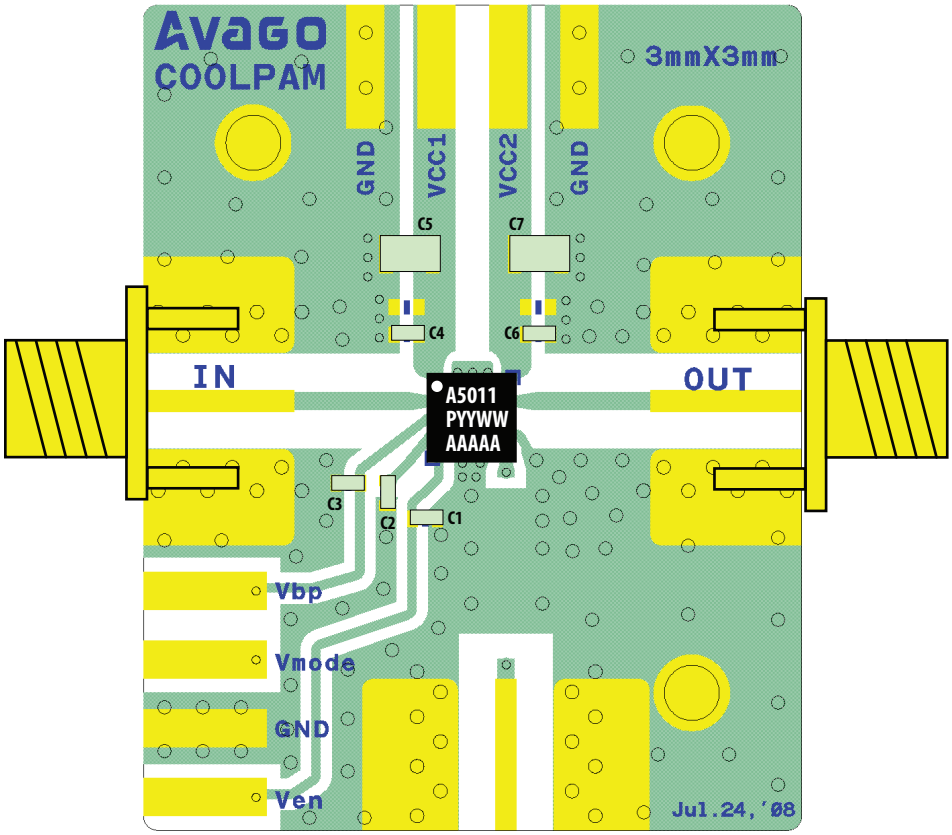

Downloaded from Elcodis.com electronic components distributor

Tape and Reel Information

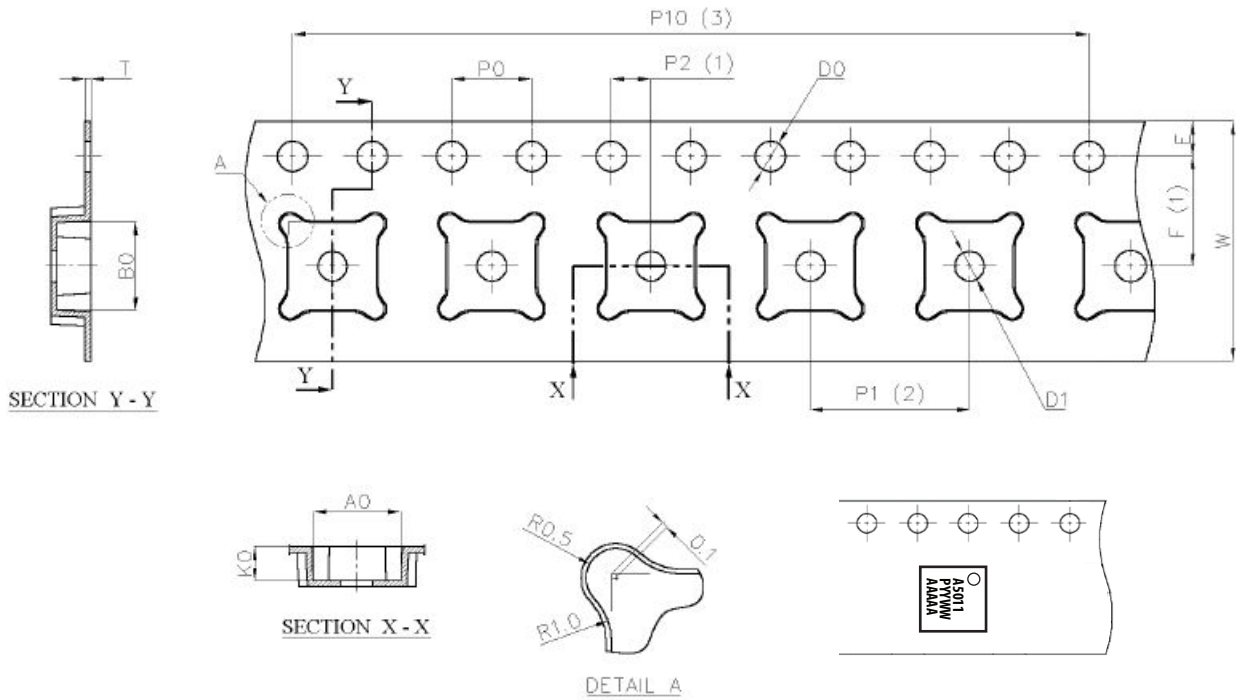

Dimension List

Annote	Millimeter
A0	3.40±0.10
B0	3.40±0.10
K0	1.35±0.10
D0	1.55±0.05
D1	1.60±0.10
P0	4.00±0.10
P1	8.00±0.10

Annote	Millimeter
P2	2.00±0.05
P10	40.00±0.20
E	1.75±0.10
F	5.50±0.05
W	12.00±0.30
T	0.30±0.05

Tape and Reel Format – 3 mm x 3 mm

Downloaded from Elcodis.com electronic components distributor

Reel Drawing

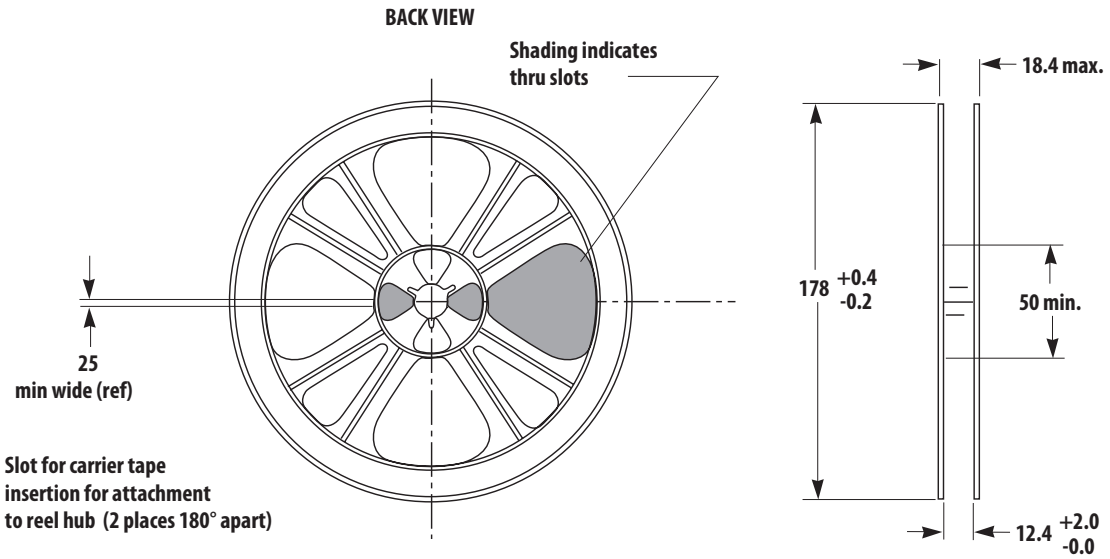

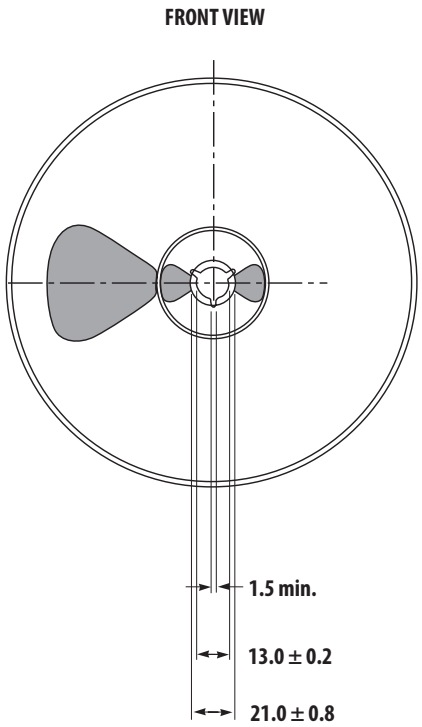

NOTES:

1. Reel shall be labeled with the following information (as a minimum).
   a. manufacturers name or symbol
   b. Avago Technologies part number
   c. purchase order number
   d. date code
   e. quantity of units
2. A certificate of compliance (c of c) shall be issued and accompany each shipment of product.
3. Reel must not be made with or contain ozone depleting materials.
4. All dimensions in millimeters (mm)

Plastic Reel Format (all dimensions are in millimeters)

Downloaded from Elcodis.com electronic components distributor

Handling and Storage

ESD (Electrostatic Discharge)

Electrostatic discharge occurs naturally in the environment.With the increase in voltage potential, the outlet of neutralization or discharge will be sought. If the acquired discharge route is through a semiconductor device, destructive damage will result.

ESD countermeasure methods should be developed and used to control potential ESD damage during handling in a factory environment at each manufacturing site.

MSL (Moisture Sensitivity Level)

Plastic encapsulated surface mount package is sensitive to damage induced by absorbed moisture and temperature.

Avago Technologies follows JEDEC Standard J-STD 020B. Each component and package type is classified for moisture sensitivity by soaking a known dry package at various temperatures and relative humidity, and times. After soak, the components are subjected to three consecutive simulated reflows.

The out of bag exposure time maximum limits are determined by the classification test describe below which corresponds to a MSL classification level 6 to 1 according to the JEDEC standard IPC/JEDEC J-STD-020B and J-STD-033.

ACPM-5011 is MSL3. Thus, according to the J-STD-033 p.11 the maximum Manufacturers Exposure Time (MET) for this part is 168 hours. After this time period, the part would need to be removed from the reel, de-taped and then re-baked. MSL classification reflow temperature for the ACPM-5011 is targeted at 260° C +0/-5° C. Figure and table on next page show typical SMT profile for maximum temperature of 260 +0/-5° C.

Moisture Classification Level and Floor Life

MSL Level	Floor Life (out of bag) at factory ambient = < 30° C/60% RH or as stated
1	Unlimited at = < 30° C/85% RH
2	1 year
2a	4 weeks
3	168 hours
4	72 hours
5	48 hours
5a	24 hours
6	Mandatory bake before use. After bake, must be reflowed within the time limit specified on the label

Note:
1. The MSL Level is marked on the MSL Label on each shipping bag.

Downloaded from Elcodis.com electronic components distributor

Reflow Profile Recommendations

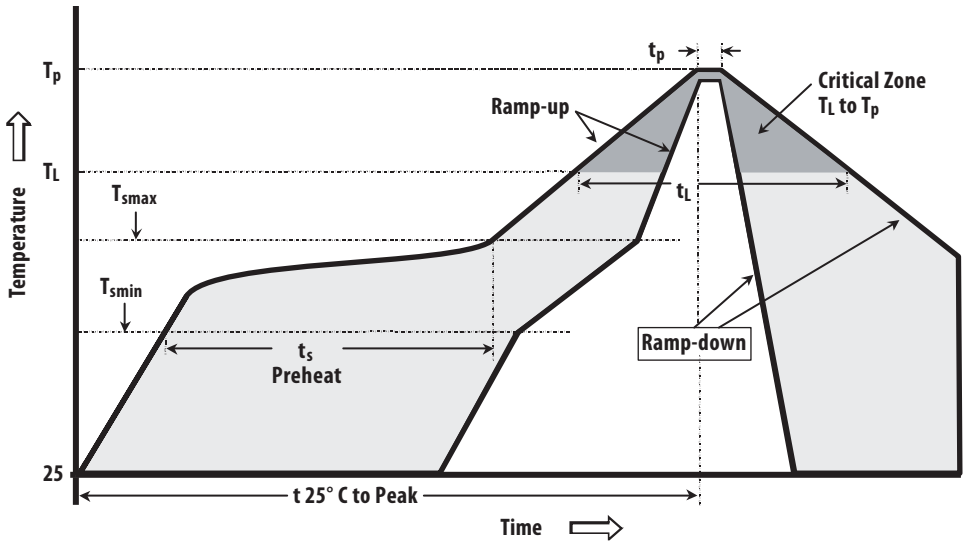

Typical SMT Reflow Profile for Maximum Temperature = 260 +0/-5° C

Typical SMT Reflow Profile for Maximum Temperature = 260 +0/-5° C

Profile Feature	Sn-Pb Solder	Pb-Free Solder
Average ramp-up rate (T_L to T_P)	3° C/sec max	3° C/sec max
Preheat – Temperature Min (T_{smin}) – Temperature Max (T_{smax}) – Time (min to max) (t_s)	 100° C 150° C 60-120 sec	 150° C 200° C 60-180 sec
T_{smax} to T_L – Ramp-up Rate		 3° C/sec max
Time maintained above: – Temperature (T_L) – Time (T_L)	 183° C 60-150 sec	 217° C 60-150 sec
Peak temperature (T_P)	240 +0/-5° C	260 +0/-5° C
Time within 5° C of actual Peak Temperature (T_P)	10-30 sec	20-40 sec
Ramp-down Rate	6° C/sec max	6° C/sec max
Time 25° C to Peak Temperature	6 min max.	8 min max.

Downloaded from Elcodis.com electronic components distributor

Storage Condition

Packages described in this document must be stored in sealed moisture barrier, antistatic bags. Shelf life in a sealed moisture barrier bag is 12 months at <40° C and 90% relative humidity (RH) J-STD-033 p.7.

Out-of-Bag Time Duration

After unpacking the device must be soldered to the PCB within 168 hours as listed in the J-STD-020B p.11 with factory conditions <30° C and 60% RH.

Baking

It is not necessary to re-bake the part if both conditions (storage conditions and out-of bag conditions) have been satisfied. Baking must be done if at least one of the conditions above have not been satisfied. The baking conditions are 125° C for 12 hours J-STD-033 p.8.

CAUTION

Tape and reel materials typically cannot be baked at the temperature described above. If out-of-bag exposure time is exceeded, parts must be baked for a longer time at low temperatures, or the parts must be de-reeled, de-taped, re-baked and then put back on tape and reel. (See moisture sensitive warning label on each shipping bag for information of baking).

Board Rework
Component Removal, Rework and Remount

If a component is to be removed from the board, it is recommended that localized heating be used and the maximum body temperatures of any surface mount component on the board not exceed 200° C. This method will minimize moisture related component damage. If any component temperature exceeds 200° C, the board must be baked dry per 4-2 prior to rework and/or component removal. Component temperatures shall be measured at the top center of the package body. Any SMD packages that have not exceeded their floor life can be exposed to a maximum body temperature as high as their specified maximum reflow temperature.

Removal for Failure Analysis

Not following the above requirements may cause moisture/reflow damage that could hinder or completely prevent the determination of the original failure mechanism.

Baking of Populated Boards

Some SMD packages and board materials are not able to withstand long duration bakes at 125° C. Examples of this are some FR-4 materials, which cannot withstand a 24 hr bake at 125° C. Batteries and electrolytic capacitors are also temperature sensitive. With component and board temperature restrictions in mind, choose a bake temperature from Table 4-1 in J-STD 033; then determine the appropriate bake duration based on the component to be removed. For additional considerations see IPC-7711 andIPC-7721.

Derating due to Factory Environmental Conditions

Factory floor life exposures for SMD packages removed from the dry bags will be a function of the ambient environmental conditions. A safe, yet conservative, handling approach is to expose the SMD packages only up to the maximum time limits for each moisture sensitivity level as shown in next table. This approach, however, does not work if the factory humidity or temperature is greater than the testing conditions of 30° C/60% RH. A solution for addressing this problem is to derate the exposure times based on the knowledge of moisture diffusion in the component package materials ref. JESD22-A120). Recommended equivalent total floor life exposures can be estimated for a range of humidities and temperatures based on the nominal plastic thickness for each device.

Table on next page lists equivalent derated floor lives for humidities ranging from 20-90% RH for three temperature, 20° C, 25° C, and 30° C.

Table on next page is applicable to SMDs molded with novolac, biphenyl or multifunctional epoxy mold compounds. The following assumptions were used in calculating this table:

1. Activation Energy for diffusion = 0.35eV (smallest known value).
2. For ≤60% RH, use Diffusivity = 0.121exp (-0.35eV/kT) mm^2/s (this used smallest known Diffusivity @ 30° C).
3. For >60% RH, use Diffusivity = 1.320exp (-0.35eV/kT) mm^2/s (this used largest known Diffusivity @ 30° C).

Downloaded from Elcodis.com electronic components distributor

Recommended Equivalent Total Floor Life (days) @ 20° C, 25° C & 30° C, 35° C

For ICs with Novolac, Biphenyl and Multifunctional Epoxies (Reflow at same temperature at which the component was classified) Maximum Percent Relative Humidity

Maximum Percent Relative Humidity												
Package Type and Body Thickness	**Moisture Sensitivity Level**	**5%**	**10%**	**20%**	**30%**	**40%**	**50%**	**60%**	**70%**	**80%**	**90%**	
Body Thickness ≥3.1 mm	Level 2a	∞	∞	94	44	32	26	16	7	5	4	35° C
Including		∞	∞	124	60	41	33	28	10	7	6	30° C
PQFPs >84 pin,		∞	∞	167	78	53	42	36	14	10	8	25° C
PLCCs (square)		∞	∞	231	103	69	57	47	19	13	10	20° C
All MQFPs	Level 3	∞	∞	8	7	6	6	6	4	3	3	35° C
or		∞	∞	10	9	8	7	7	5	4	4	30° C
All BGAs ≥1 mm		∞	∞	13	11	10	9	9	7	6	5	25° C
		∞	∞	17	14	13	12	12	10	8	7	20° C
	Level 4	∞	3	3	3	2	2	2	2	1	1	35° C
		∞	5	4	4	4	3	3	3	2	2	30° C
		∞	6	5	5	5	5	4	3	3	3	25° C
		∞	8	7	7	7	7	6	5	4	4	20° C
	Level 5	∞	2	2	2	2	1	1	1	1	1	35° C
		∞	4	3	3	2	2	2	2	1	1	30° C
		∞	5	5	4	4	3	3	2	2	2	25° C
		∞	7	7	6	5	5	4	3	3	3	20° C
	Level 5a	∞	1	1	1	1	1	1	1	1	1	35° C
		∞	2	1	1	1	1	1	1	1	1	30° C
		∞	3	2	2	2	2	2	1	1	1	25° C
		∞	5	4	3	3	3	2	2	2	2	20° C
Body 2.1 mm	Level 2a	∞	∞	∞	∞	58	30	22	3	2	1	35° C
≤ Thickness		∞	∞	∞	∞	86	39	28	4	3	2	30° C
<3.1 mm including		∞	∞	∞	∞	148	51	37	6	4	3	25° C
PLCCs (rectangular)		∞	∞	∞	∞	∞	69	49	8	5	4	20° C
18-32 pin	Level 3	∞	∞	12	9	7	6	5	2	2	1	35° C
SOICs (wide body)		∞	∞	19	12	9	8	7	3	2	2	30° C
SOICs ≥20 pins,		∞	∞	25	15	12	10	9	5	3	3	25° C
PQFPs ≤80 pins		∞	∞	32	19	15	13	12	7	5	4	20° C
	Level 4	∞	5	4	3	3	2	2	1	1	1	35° C
		∞	7	5	4	4	3	3	2	2	1	30° C
		∞	9	7	5	5	4	4	3	2	2	25° C
		∞	11	9	7	6	6	5	4	3	3	20° C
	Level 5	∞	3	2	2	2	2	1	1	1	1	35° C
		∞	4	3	3	2	2	2	1	1	1	30° C
		∞	5	4	3	3	3	3	2	1	1	25° C
		∞	6	5	5	4	4	4	3	3	2	20° C
	Level 5a	∞	1	1	1	1	1	1	1	0.5	0.5	35° C
		∞	2	1	1	1	1	1	1	0.5	0.5	30° C
		∞	2	2	2	2	2	2	1	1	1	25° C
		∞	3	2	2	2	2	2	2	2	1	20° C
Body Thickness <2.1 mm	Level 2a	∞	∞	∞	∞	∞	∞	17	1	0.5	0.5	35° C
including		∞	∞	∞	∞	∞	∞	28	1	1	1	30° C
SOICs <18 pin		∞	∞	∞	∞	∞	∞	∞	2	1	1	25° C
All TQFPs, TSOPs		∞	∞	∞	∞	∞	∞	∞	2	2	1	20° C
or	Level 3	∞	∞	∞	∞	∞	8	5	1	0.5	0.5	35° C
All BGAs <1 mm body		∞	∞	∞	∞	∞	11	7	1	1	1	30° C
thickness		∞	∞	∞	∞	∞	14	10	2	1	1	25° C
		∞	∞	∞	∞	∞	20	13	2	2	1	20° C
	Level 4	∞	∞	∞	7	4	3	2	1	0.5	0.5	35° C
		∞	∞	∞	9	5	4	3	1	1	1	30° C
		∞	∞	∞	12	7	5	4	2	1	1	25° C
		∞	∞	∞	17	9	7	6	2	2	1	20° C
	Level 5	∞	∞	7	3	2	2	1	1	0.5	0.5	35° C
		∞	∞	13	5	3	2	2	1	1	1	30° C
		∞	∞	18	6	4	3	3	2	1	1	25° C
		∞	∞	26	8	6	5	4	2	2	1	20° C
	Level 5a	∞	7	2	1	1	1	1	1	0.5	0.5	35° C
		∞	10	3	2	1	1	1	1	1	0.5	30° C
		∞	13	5	3	2	2	2	1	1	1	25° C
		∞	18	6	4	3	2	2	2	2	1	20° C

For product information and a complete list of distributors, please go to our web site: **www.avagotech.com**

Avago, Avago Technologies, and the A logo are trademarks of Avago Technologies in the United States and other countries.
Data subject to change. Copyright © 2005-2011 Avago Technologies. All rights reserved.
AV02-2837EN - February 8, 2011

Downloaded from Elcodis.com electronic components distributor