POWERSEM

Fast Recovery Epitaxial Diode (FRED) Module

PSMD 100E

I_{FAV} = 136 A
V_{RRM} = 200-600V

Preliminary Data Sheet

V_{RSM} V	V_{RRM} V	Type
200	200	PSMD 100E/02
400	400	PSMD 100E/04
600	600	PSMD 100E/06

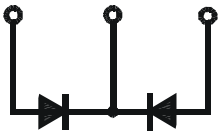

Symbol	Test Conditions			Maximum Ratings	
I_{FAV}	T_C = 70°C			136	A
I_{FSM}	T_{VJ} = 45°C	t = 10 ms	(50 Hz), sine	2000	A
	V_R = 0	t = 8.3 ms	(60 Hz), sine	2200	A
	T_{VJ} = T_{VJM}	t = 10 ms	(50 Hz), sine	1800	A
	V_R = 0	t = 8.3 ms	(60 Hz), sine	1980	A
$\int i^2 dt$	T_{VJ} = 45°C	t = 10 ms	(50 Hz), sine	20000	$A^2 s$
	V_R = 0	t = 8.3 ms	(60 Hz), sine	20080	$A^2 s$
	T_{VJ} = T_{VJM}	t = 10 ms	(50 Hz), sine	16200	$A^2 s$
	V_R = 0	t = 8.3 ms	(60 Hz), sine	16250	$A^2 s$
T_{VJ}				-40 ... + 150	°C
T_{VJM}				150	°C
T_{stg}				-40 ... + 125	°C
V_{ISOL}	50/60 HZ, RMS	t = 1 min		2500	V ~
	$I_{ISOL} \leq$ 1 mA	t = 1 s		3000	V ~
M_d	Mounting torque		(M6)	5	Nm
	Terminal connection torque		(M6)	5	Nm
Weight	typ.			270	g

Symbol	Test Conditions		Characteristic Value		
I_R	V_R = V_{RRM}	T_{VJ} = 25°C	≤	250	µA
	V_R = V_{RRM}	T_{VJ} = T_{VJM}	≤	2.5	mA
V_F	I_F = 100 A	T_{VJ} = 25°C	≤	1.25	V
t_{rr}	T_{VJ} = 25°C; I_F=1A; -di_F/dt=400A/µs V_R= 30V			typ. 60	ns
I_{RM}	IF=100A; -di_F/dt=200A/µs; V_R=100V L ≤ 0,05 mH; T_{VJ} = 100°C			typ. 45	A
V_{TO}	For power-loss calculations only			0.45	V
r_T	T_{VJ} = T_{VJM}			1.25	mΩ
R_{thJH}	per diode; DC current			0.84	K/W
R_{thJC}	per diode; DC current			0.65	K/W
d_S	Creeping distance on surface			10	mm
d_A	Creeping distance in air			9.4	mm
a	Max. allowable acceleration			50	m/s^2

Features
- Package with screw terminals
- Isolation voltage 3000 V~
- Planar glasspassivated chips
- Short recovery time
- Low forward voltage drop
- Short recovery behaviour
- UL registered, E 148688

Applications
- Inductive heating and melting
- Free wheeling diode in converters and motor control circuits
- Uninterruptible power supplies (UPS)
- Ultrasonic cleaners and welders

Advantages
- High reliability circuit operation
- Low voltage peaks for reduced protection circuits
- Low noise switching
- Low losses

Package, style and outline
Dimensions in mm (1mm = 0.0394")

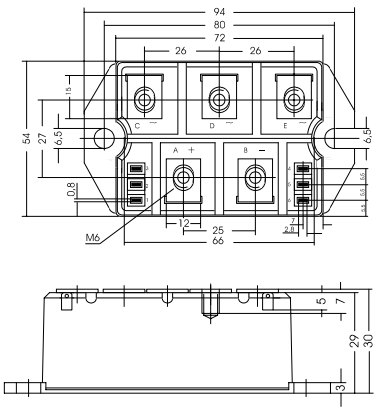

POWERSEM GmbH, Walpersdorfer Str. 53
91126 D- Schwabach
Phone: 09122 - 9764-0 Fax.: 09122 - 9764-20

© 2003 POWERSEM reserves the right to change limits, test conditions and dimensions

Downloaded from Elcodis.com electronic components distributor