AlGaAs *Invisible Laser Diode* ADL-80Y01TX/TZ

2004/05 ver. 1.0

★ *808nm 200mW 5.6 φ TO-Type High Power Laser Diode*

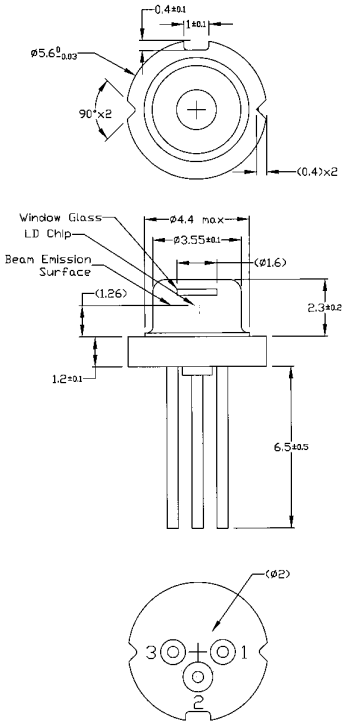

( ) denoted typical value

- Features
  1. Standard 5.6φ TO-type: easy for design, assembly and integratior
  2. Low operation current
  3. Long operation lifetime, MTTF>10000 hrs
  4. Cost effective

- Applications
  1. Pumps for solid state lasers
  2. Miniature low power green laser
  3. Medical use

- Absolute maximum ratings

Parameter	Symbol	Condition	Rating	Unit
Light output power	P_O	CW	200	mW
Reverse voltage (LD)	V_{RL}	-	2	V
Case temperature	T_C	-	-10~+50	^oC
Storage temperature	T_S	-	-40~+75	^oC

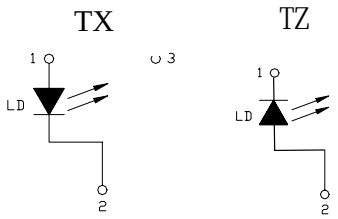

- Electrical and optical characteristics (T_c=25 ^oC)

Parameter	Symbol	Min.	Typ.	Max.	Unit	Conditions
Peak wavelength	λ	805	808	811	nm	P_o=200mW
Threshold current	I_{th}	-	55	75	mA	
Operating current	I_{op}	-	260	280	mA	P_o=200mW
Operating voltage	V_{op}	-	1.7	1.9	V	P_o=200mW
Differential efficiency	η	0.8	1	-	mW/mA	P_o=150-200mW
Parallel divergence angle	$\theta_{//}$	-	9	15	degree	P_o=200mW
Perpendicular divergence angle	$\theta_{\perp}$	-	41	48	degree	
Emission point accuracy	Δx Δy Δz	-	-	±80	um	

- Precautions

1. Do not operate the device above the maximum rating condition, even momentarily. It may cause unexpected permanent damage to the device.
2. Semiconductor laser device is very sensitive to electrostatic discharge. High voltage spike current may change the characteristics of the device, or malfunction at any time during its service period. Therefore, proper measures for preventing electrostatic discharge are strongly recommended.
3. Effective heat sink can help the device operates under a more relax condition; as a result, a more stable characteristics and better reliability can be achieved. So it is recommended that always apply proper heat sink before the device is operating.
4. Do not look into the laser beam directly by bare eyes. The laser beam may cause severe damage to human eyes.