TOSHIBA RF POWER AMPLIFIER MODULE

S−AU27AL,S−AU27AM,S−AU27AH

25W FM RF POWER AMPLIFIER MODULE

- S-AU27AL : f = 400~430MHz
- S-AU27AM : f = 450~490MHz
- S-AU27AH : f = 490~512MHz

Unit in mm

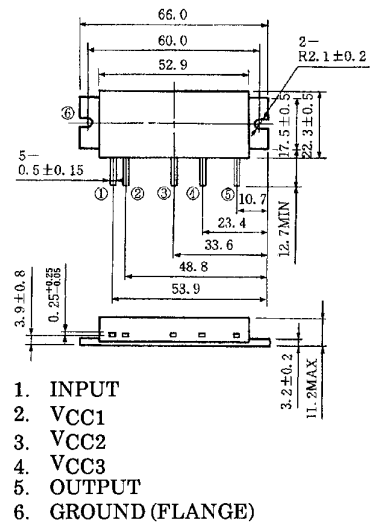

JEDEC	—
EIAJ	—
TOSHIBA	5−53Q

Weight: 35g

MAXIMUM RATINGS (Tc = 25°C)

CHARACTERISTIC	SYMBOL	RATING	UNIT
DC Supply Voltage	V_{CC1}	16	V
DC Supply Voltage	V_{CC2}	17	V
DC Supply Voltage	V_{CC3}	17	V
Total current	I_T	10	A
Input Power	P_i	600	mW
Output Power	P_o	40	W
Operating Case Temperature Range	$T_{c\ (opr)}$	−30~100	°C
Storage Temperature Range	T_{stg}	−40~110	°C

ELECTRICAL CHARACTERISTICS (Tc = 25°C)

CHARACTERISTIC	SYMBOL	TEST CONDITION	MIN.	TYP.	MAX.	UNIT
Frequency Range	f_{range}	—	400	—	512	MHz
Output Power	Po	$V_{CC1} = V_{CC2} = V_{CC3} = 12.5V$ Pi = 200mW $Z_G = Z_L = 50\Omega$	32	—	—	W
Power Gain	G_p		22.0	—	—	dB
Total Efficiency	η_T		35	—	—	%
Input VSWR	VSWRin		—	1.5	2.5	—
Harmonics	HRM		—	−30	−25	dB
Load Mismatch	—	Po = 35W (V_{CC1} = adjust) $V_{CC2} = V_{CC3} = 15V$ Pi = 200mW VSWR load 20: 1 all phase	No Degradation			—
Stability	—	$V_{CC2} = V_{CC3} = 12.5V$ $V_{CC1} = 3\sim12.5V$ Pi = 200mW VSWR load 3: 1 all phase	All spurious output than 60dB below desired signal			—

000707EAA2

• TOSHIBA is continually working to improve the quality and reliability of its products. Nevertheless, semiconductor devices in general can malfunction or fail due to their inherent electrical sensitivity and vulnerability to physical stress. It is the responsibility of the buyer, when utilizing TOSHIBA products, to comply with the standards of safety in making a safe design for the entire system, and to avoid situations in which a malfunction or failure of such TOSHIBA products could cause loss of human life, bodily injury or damage to property.
In developing your designs, please ensure that TOSHIBA products are used within specified operating ranges as set forth in the most recent TOSHIBA products specifications. Also, please keep in mind the precautions and conditions set forth in the "Handling Guide for Semiconductor Devices," or "TOSHIBA Semiconductor Reliability Handbook" etc..

Downloaded from Elcodis.com electronic components distributor

CAUTION

- This product has intersetting cap. Please pay attention for exceeding stress and foreign matter in your application. And not to take away the cap.
- Beryllia Ceramics is used in this product. The dust or vapor can be dangerous to humans. Do not break, cut, crush or dissolve chemically. Dispose of this product properly according to law. Do not intermingle with normal industrial or domestic waste.

SCHEMATIC

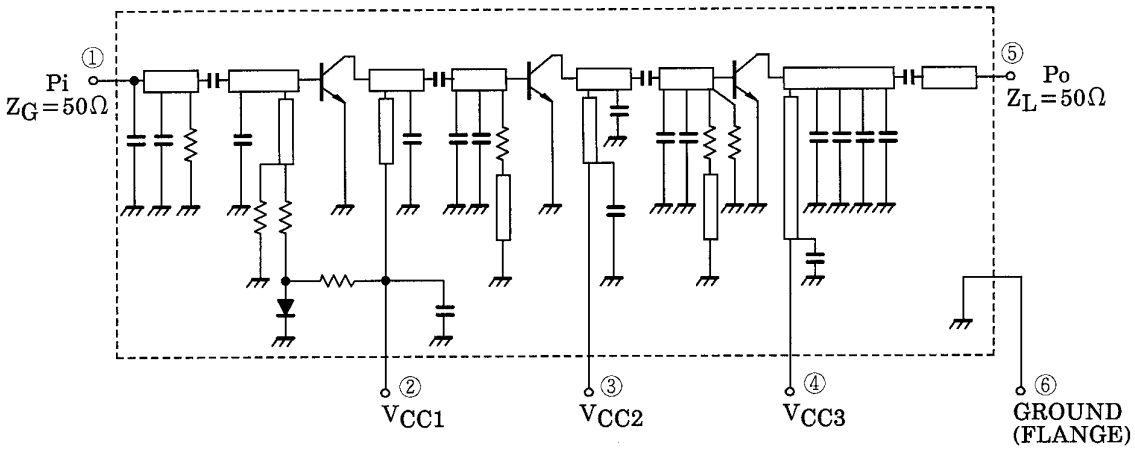

TEST FIXTURE

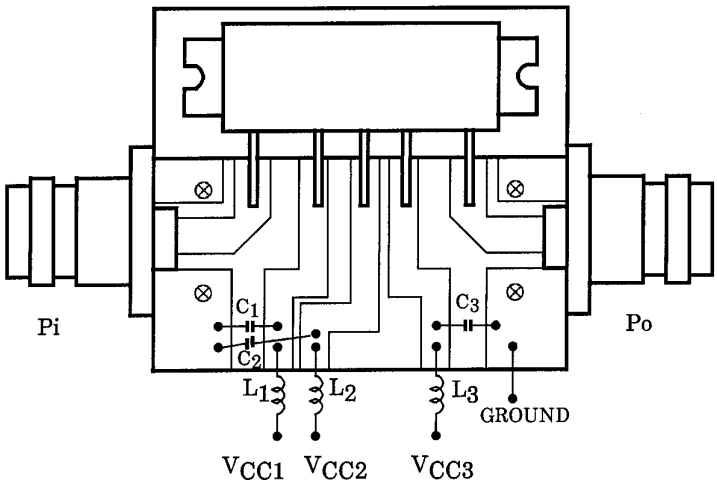

C : 15000pF, 10μF PARALLEL
L : ϕ0.8 ENAMEL WIRE 8T, 5ID

000707EAA2

- The TOSHIBA products listed in this document are intended for usage in general electronics applications (computer, personal equipment, office equipment, measuring equipment, industrial robotics, domestic appliances, etc.). These TOSHIBA products are neither intended nor warranted for usage in equipment that requires extraordinarily high quality and/or reliability or a malfunction or failure of which may cause loss of human life or bodily injury ("Unintended Usage"). Unintended Usage include atomic energy control instruments, airplane or spaceship instruments, transportation instruments, traffic signal instruments, combustion control instruments, medical instruments, all types of safety devices, etc.. Unintended Usage of TOSHIBA products listed in this document shall be made at the customer's own risk.
- The information contained herein is presented only as a guide for the applications of our products. No responsibility is assumed by TOSHIBA CORPORATION for any infringements of intellectual property or other rights of the third parties which may result from its use. No license is granted by implication or otherwise under any intellectual property or other rights of TOSHIBA CORPORATION or others.
- The information contained herein is subject to change without notice.

Downloaded from Elcodis.com electronic components distributor

TYPICAL PERFORMANCE CURVE
(S−AU27AM)

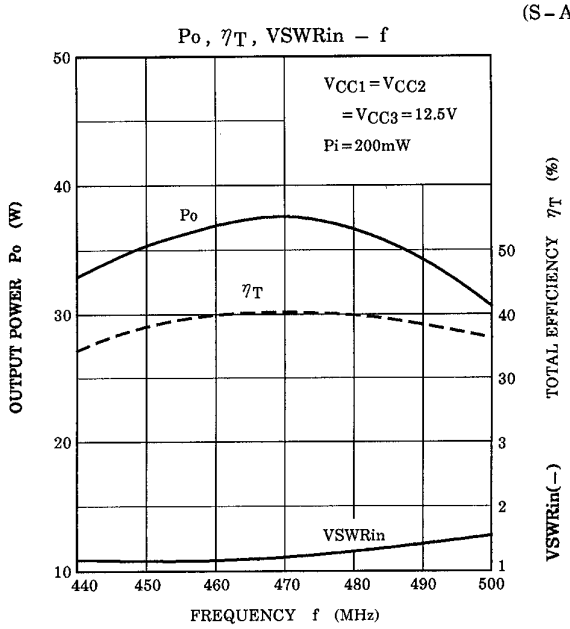

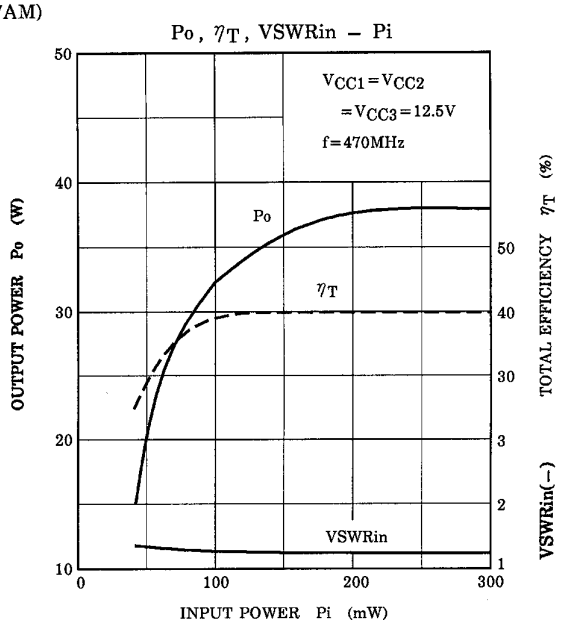

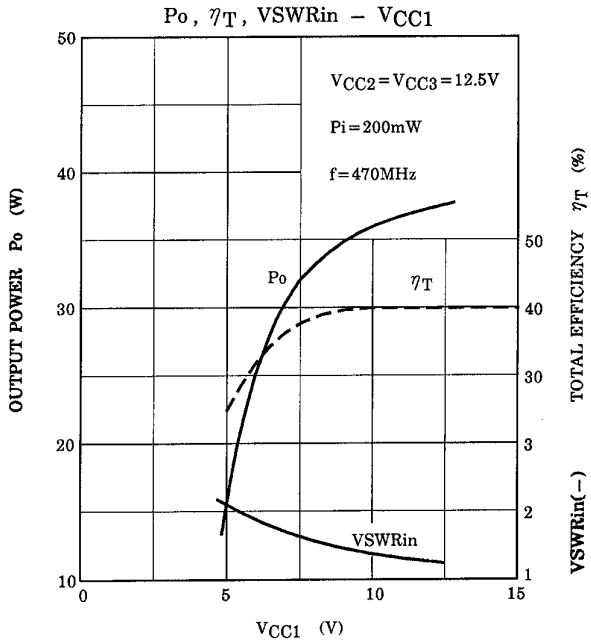

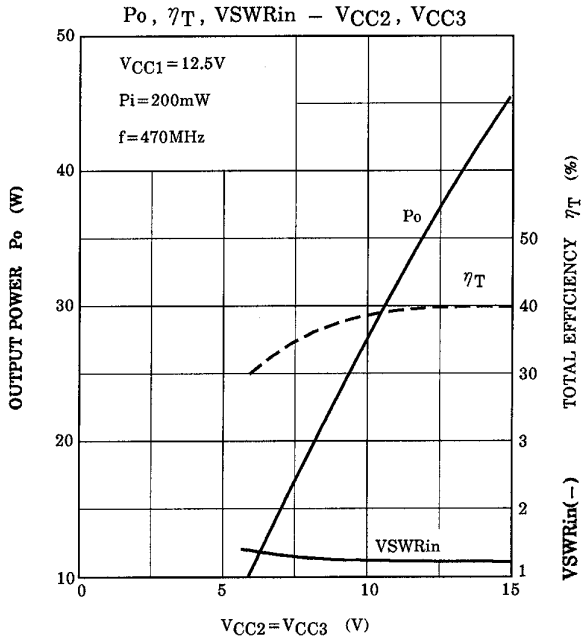

CAUTION

These are only typical curves and devices are not necessarily guaranteed at these curves.

Downloaded from Elcodis.com electronic components distributor