IC for Headphone Stereos (with volume-limiting circuit)
Monolithic IC MM1336

December 19, 1995

Outline

This IC was developed for use in 3V headphone stereos. In addition to the basic functions required by headphone stereos, it incorporates a circuit for limiting volume. In some parts of Europe hearing impairment caused by the high volumes of headphone stereos has become a problem, and there has been strong demand for functions for limiting loud volumes in the sets themselves. This trend is expected to gain momentum in the U.S. as well.
This IC uses an internal ALC circuit to suppress headphone stereo output, avoiding the above problem.

Features

1. Configuration: Pre-and power amps, ALC circuit, motor control
2. Internal tape selector: A selector switch allows the user to select between normal and metal tapes.
3. Internal OCL circuit: There is no need for a capacitor for high-volume output, so sets can be kept thin.
4. With preamp off pin while connected to radio
5. Designed for low shock noise
   Reduced noise occuring when the power supply is turned on and off

Package

SOP-28B (MM1336CF, MM1336DF)

Pin Assignment

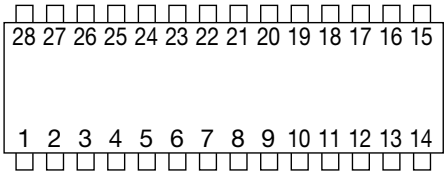

SOP-28B

1	COM1	15	VS
2	PIN1	16	C
3	PNF1	17	Vcc2
4	PBU1	18	OUT2
5	POUT1	19	Vcc1
6	IN1	20	RF
7	RECT	21	Pre OFF
8	AVNF	22	N/M
9	OUT1	23	IN2
10	COM2	24	POUT2
11	GND1	25	PBU2
12	GND2	26	PNF2
13	PCOUT	27	PIN2
14	PHASE	28	GND3

Absolute Maximum Ratings

Item	Symbol	Ratings	Units
Operating temperature	T_{OPR}	–20~+65	℃
Storage temperature	T_{STG}	–40~+125	℃
Power supply current	V_{CC}	–0.3~+7.5	V
Power consumption	Pd	700	mW

Recommended Operating Conditions

Item	Symbol	Ratings	Units
Operating temperature	T_{OPR}	–20~65	℃
Operating voltage	V_{OPR}	2.0~5.0	V

Electrical Characteristics (Except where noted otherwise, Vcc=3V, Ta=25℃, f=1kHz, R_L1=10kΩ, R_L2=16Ω)

Item		Symbol	Measurement conditions	Min.	Typ.	Max.	Units
Consumption current		I_{CC}	V_{IN}=0V, when motor is off	6	12	20	mA
Preamp unit							
Open-circuit gain		Gvo			72		dB
Closed-circuit gain Ⅰ	Normal	Gvc	Vo=–10dBm, f=1kHz	31	33.5	36	dB
	Metal			29.5	32	34.5	
Closed-circuit gain Ⅱ	Normal	Gvc	Vo=–10dBm, f=5kHz	28	30.5	33	dB
	Metal			23	25.5	28	
Maximum output voltage		Vom	THD=10%	0.30	0.45		Vrms
Total harmonic distortion ratio		THD	V_{OUT}=–10dBm		0.05	0.5	%
Output noise voltage	Normal	Vno	Rg=2.2k, BPF (400~30kHz)	30	75	150	μVrms
	Metal			20	45	100	
Crosstalk between channels		C · T	Rg=2.2kΩ, V_{OUT}=–10dBm	50	70		dB
Ripple rejection rate		RR	V_{CC}=3V, V_R=–20dBm, f_R=100Hz, Rg=2.2kΩ	45	55		dB
Output voltage with preamp off		Vooff	V_{IN}=100mVrms, Pre off		–80	–60	dBm
ALC (off) + power amp							
Voltage gain		Gv	P_{OUT}=5mW	24	26	28	dB
Voltage gain difference between channels		⊿GV 2CH		–2	0	2	dB
Maximum output current		Pom	THD=10% R_L=16Ω	30	50		mW
Total harmonic distortion ratio		THD	P_{OUT}=5mW		0.5	1.5	%
Crosstalk between channels		C · T	P_{OUT}=5mW	35	45		dB
Output noise voltage		Vn	Rg=0Ω, BPF (400~30kHz)		85	200	μVrms
Ripple rejection rate		RR	V_{CC}=3V, V_R=–20dBm, f_R=100Hz, Rg=0Ω	35	45		dB
Input resistance		Ri		19	24	29	kΩ
ALC (on) + power amp							
Power amp output voltage		VOA	V_{IN}=–40dBm	–34	–30	–26	dBm
ALC initiation input voltage		VINA			–56		dBm
ALC width		WALC	Input width for output from start of up to +4dB	30	40		dB
ALC total harmonic distortion		THD	V_{IN}=–40dBm		0.5	1.5	%
Noise of preamp+power amp+ALC		Vnto	Rg=2.2kΩ (preamp)		1.5	6	mVrms

Item	Symbol	Measurement conditions	Min.	Typ.	Max.	Units
Motor control unit						
Consumption current	Id	A2 measurement I_M=0mA		1.5	3.5	mA
Startup current	IMS	At Rv=1.5Ω	500			mA
Reference voltage	VS	At SW1=OFF, I_M=100mA	0.09	0.10	0.11	V
Reference voltage fluctuation Ⅰ	⊿VS1	VS fluctuation rate for V_{CC} between 1.8 and 3.5V with V_{CC}=3.0 V as reference, I_M=100mA		0.1	0.5	%/V
Reference voltage fluctuation Ⅱ	⊿VS2	VS fluctuation rate for I_M between 25 and 200 mA with I_M=100 mA as reference		0.005	0.05	%/mA
Reference voltage fluctuation Ⅲ	⊿VS3	VS fluctuation rate for Ta between −10 and 50℃ with Ta=25℃ as reference		0.01		%/℃
Output saturation voltage	VoSAT	I_M=200mA, V8 measurement, SW2=on		0.2	0.3	V
Bridge ratio	K	⊿V7/⊿V6 measurement	9	10	11	
Bridge ratio fluctuation Ⅰ	⊿K1	K fluctuation rate for V_{CC} between 1.8 and 3.5V with V_{CC}=3V as reference		0.1	0.2	%/V
Bridge ratio fluctuation Ⅱ	⊿K2	K fluctuation rate for I_M between 25 and 250mA with I_M=100mA as reference		0.05	0.2	%/mA
Bridge ratio fluctuation Ⅲ	⊿K3	K fluctuation rate for Ta between −10 and 60℃ with Ta=25℃ as reference		0.01		%/℃

Block Diagram

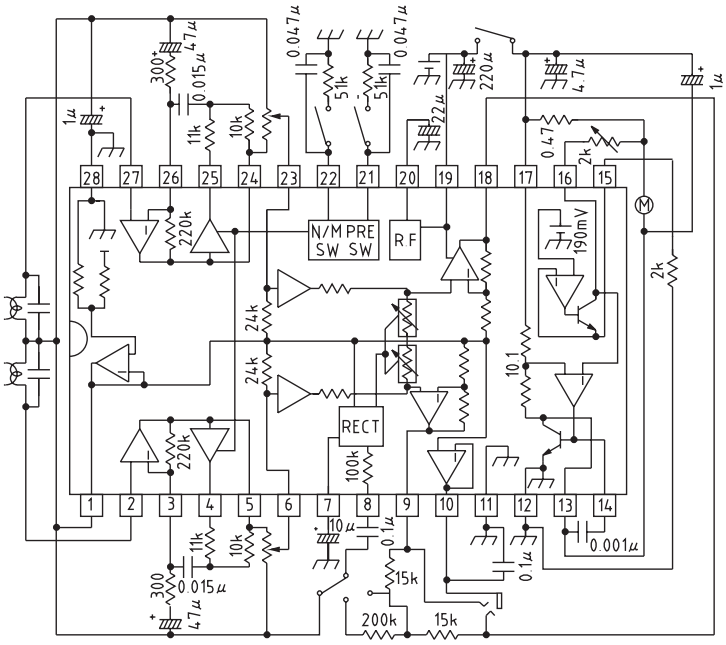

Characteristics

Preamp

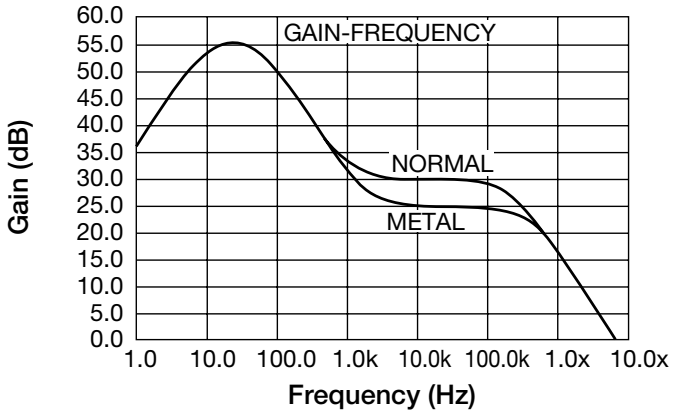

MM1336AALC+power amp (26dB)
V_{IN}–V_{OUT} Specifications
R_L=16Ω

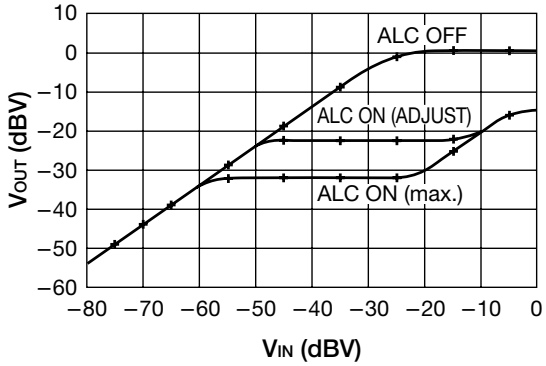

Note: The above characteristics are representative, and are not guaranteed.