KIA79L05F~ KIA79L24F

BIPOLAR LINEAR INTEGRATED CIRCUIT

THREE TERMINAL NEGATIVE VOLTAGE REGULATORS
5V, 6V, 8V, 9V, 10V, 12V, 15V, 18V, 20V, 24V

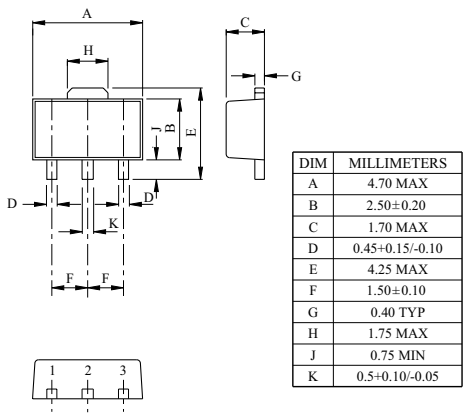

DIM	MILLIMETERS
A	4.70 MAX
B	2.50±0.20
C	1.70 MAX
D	0.45+0.15/-0.10
E	4.25 MAX
F	1.50±0.10
G	0.40 TYP
H	1.75 MAX
J	0.75 MIN
K	0.5+0.10/-0.05

SOT-89

FEATURES

- Best Suited to a Power Supply for TTL and C^2-MOS.
- Built-in Overcurrent Protective Circuit.
- Built-in Thermal Protective Circuit.
- Max. Output Current 150mA (T_j=25 ℃).
- Packaged in Power mini.

MAXIMUM RATINGS (Ta=25 ℃)

CHARACTERISTIC		SYMBOL	RATING	UNIT
Input Voltage	KIA79L05F ~ KIA79L15F	V_{IN}	-35	V
	KIA79L18F ~ KIA79L24F		-40	
Power Dissipation (Tc=25℃)		P_D	500	mW
Operating Junction Temperature		T_j	-30 ~ 150	℃
Operating Temperature		T_{opr}	-30 ~75	℃
Storage temperature		T_{stg}	-55 ~ 150	℃

EQUIVALENT CIRCUIT

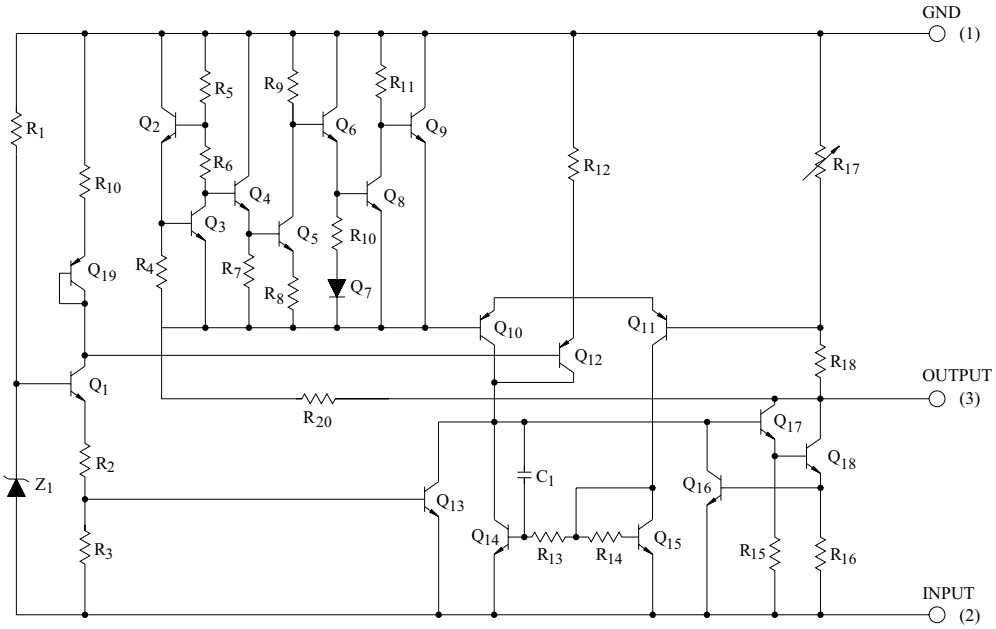

Marking

Type No.	Marking	Type No.	Marking	Type No.	Marking	Type No.	Marking
KIA79L05F	9A	KIA79L09F	9D	KIA79L15F	9G	KIA79L24F	9J
KIA79L06F	9B	KIA79L10F	9E	KIA79L18F	9H		
KIA79L08F	9C	KIA79L12F	9F	KIA79L20F	9I		

Downloaded from Elcodis.com electronic components distributor

ELECTRICAL CHARACTERISTICS

KIA79L05F

(Unless otherwise specified, V_{IN}=-10V, I_{OUT}=40mA, C_{IN}=0.33㎌, C_{OUT}=0.1㎌, 0℃≦T_j≦125℃)

CHARACTERISTIC	SYMBOL	TEST CIRCUIT	TEST CONDITION		MIN.	TYP.	MAX.	UNIT
Output Voltage	V_{OUT}	1	T_j=25℃		-5.2	-5.0	-4.8	V
Input Regulation	Reg line	1	T_j=25℃	-20V≦V_{IN}≦-7.0V	-	55	150	mV
				-20V≦V_{IN}≦-8.0V	-	45	100	
Load Regulation	Reg load	1	T_j=25℃	1.0mA≦I_{OUT}≦100mA	-	11	60	mV
				1.0mA≦I_{OUT}≦40mA	-	5.0	30	
Output Voltage	V_{OUT}	1	-20V≦V_{IN}≦-7.0V 1.0mA≦I_{OUT}≦40mA		-5.25	-	-4.75	V
			V_{IN}=-10V, 1.0mA≦I_{OUT}≦70mA		-5.25	-	-4.75	
Quiescent Current	I_B	1	T_j=25℃		-	3.1	6.0	mA
			T_j=125℃		-	-	5.5	
Quiescent Current Change	ΔI_{BI}	1	-20V≦V_{IN}≦-8.0V		-	-	1.5	mA
	ΔI_{BO}		1.0mA≦I_{OUT}≦40mA		-	-	0.1	
Output Noise Voltage	V_{NO}	3	Ta=25℃, 10Hz≦f≦100kHz		-	40	-	μV_{rms}
Long Term Stability	$\Delta V_{OUT}/\Delta t$	1			-	12	-	mV/ 1.0kHrs
Ripple Rejection Ratio	RR	2	-18V≦V_{IN}≦-8.0V, T_j=25℃, f=120Hz		41	49	-	dB
Dropout Voltage	$\lvert V_{IN}-V_{OUT} \rvert$	1	T_j=25℃, I_{OUT}=40mA		-	1.7	-	V
Average Temperature Coefficient of Output Voltage	TC_{VO}	1	I_{OUT}=5mA		-	-0.6	-	mV/℃

Downloaded from Elcodis.com electronic components distributor

ELECTRICAL CHARACTERISTICS

KIA79L06F

(Unless otherwise specified, V_{IN}=-11V, I_{OUT}=40mA, C_{IN}=0.33μF, C_{OUT}=0.1μF, 0℃≦T_j≦125℃)

CHARACTERISTIC	SYMBOL	TEST CIRCUIT	TEST CONDITION		MIN.	TYP.	MAX.	UNIT
Output Voltage	V_{OUT}	1	T_j=25℃		-6.24	-6.0	-5.76	V
Input Regulation	Reg line	1	T_j=25℃	-21V≦V_{IN}≦-8.1V	-	50	150	mV
				-21V≦V_{IN}≦-9.0V	-	45	110	
Load Regulation	Reg load	1	T_j=25℃	1.0mA≦I_{OUT}≦100mA	-	12	70	mV
				1.0mA≦I_{OUT}≦40mA	-	5.5	35	
Output Voltage	V_{OUT}	1	-21V≦V_{IN}≦-8.1V 1.0mA≦I_{OUT}≦40mA		-6.3	-	-5.7	V
			V_{IN}=-11V, 1.0mA≦I_{OUT}≦70mA		-6.3	-	-5.7	
Quiescent Current	I_B	1	T_j=25℃		-	3.1	6.0	mA
			T_j=125℃		-	-	5.5	
Quiescent Current Change	ΔI_{BI}	1	-20V≦V_{IN}≦-9.0V		-	-	1.5	mA
	ΔI_{BO}		1.0mA≦I_{OUT}≦40mA		-	-	0.1	
Output Noise Voltage	V_{NO}	3	Ta=25℃, 10Hz≦f≦100kHz		-	40	-	μV_{rms}
Long Term Stability	$\Delta V_{OUT}/\Delta t$	1			-	14	-	mV/1.0kHrs
Ripple Rejection Ratio	RR	2	-19V≦V_{IN}≦-9.0V, T_j=25℃, f=120Hz		39	47	-	dB
Dropout Voltage	$\lvert V_{IN}-V_{OUT}\rvert$	1	T_j=25℃, I_{OUT}=40mA		-	1.7	-	V
Average Temperature Coefficient of Output Voltage	TC_{VO}	1	I_{OUT}=5mA		-	-0.7	-	mV/℃

Downloaded from Elcodis.com electronic components distributor

ELECTRICAL CHARACTERISTICS

KIA79L08F

(Unless otherwise specified, V_{IN}=-14V, I_{OUT}=40mA, C_{IN}=0.33 ≦F, C_{OUT}=0.1μF, 0℃ ≦T_j ≦125℃)

CHARACTERISTIC	SYMBOL	TEST CIRCUIT	TEST CONDITION		MIN.	TYP.	MAX.	UNIT
Output Voltage	V_{OUT}	1	T_j=25℃		-8.3	-8.0	-7.7	V
Input Regulation	Reg line	1	T_j=25℃	-23V ≦V_{IN} ≦-10.5V	-	20	175	mV
				-23V ≦V_{IN} ≦-11V	-	12	125	
Load Regulation	Reg load	1	T_j=25℃	1.0mA ≦I_{OUT} ≦100mA	-	15	80	mV
				1.0mA ≦I_{OUT} ≦40mA	-	7.0	40	
Output Voltage	V_{OUT}	1	-23V ≦V_{IN} ≦-10.5V 1.0mA ≦I_{OUT} ≦40mA		-8.4	-	-7.6	V
			V_{IN}=-14V, 1.0mA ≦I_{OUT} ≦70mA		-8.4	-	-7.6	
Quiescent Current	I_B	1	T_j=25℃		-	3.1	6.5	mA
			T_j=125℃		-	-	6.0	
Quiescent Current Change	ΔI_{BI}	1	-23V ≦V_{IN} ≦-11V		-	-	1.5	mA
	ΔI_{BO}		1.0mA ≦I_{OUT} ≦40mA		-	-	0.1	
Output Noise Voltage	V_{NO}	3	Ta=25℃, 10Hz ≦f ≦100kHz		-	60	-	μV_{rms}
Long Term Stability	$\Delta V_{OUT}/\Delta t$	1			-	20	-	mV/ 1.0kHrs
Ripple Rejection Ratio	RR	2	-23V ≦V_{IN} ≦-12V, T_j=25℃, f=120Hz		37	45	-	dB
Dropout Voltage	$\lvert V_{IN}-V_{OUT} \rvert$	1	T_j=25℃, I_{OUT}=40mA		-	1.7	-	V
Average Temperature Coefficient of Output Voltage	TC_{VO}	1	I_{OUT}=5mA		-	-0.8	-	mV/℃

Downloaded from Elcodis.com electronic components distributor

ELECTRICAL CHARACTERISTICS

KIA79L09F

(Unless otherwise specified, V_{IN}=-15V, I_{OUT}=40mA, C_{IN}=0.33μF, C_{OUT}=0.1μF, 0℃≦T_j≦125℃)

CHARACTERISTIC	SYMBOL	TEST CIRCUIT	TEST CONDITION		MIN.	TYP.	MAX.	UNIT
Output Voltage	V_{OUT}	1	T_j=25℃		-9.36	-9.0	-8.64	V
Input Regulation	Reg line	1	T_j=25℃	-24V≦V_{IN}≦-11.4V	-	80	200	mV
				-24V≦V_{IN}≦-12V	-	20	160	
Load Regulation	Reg load	1	T_j=25℃	1.0mA≦I_{OUT}≦100mA	-	17	90	mV
				1.0mA≦I_{OUT}≦40mA	-	8.0	45	
Output Voltage	V_{OUT}	1	-24V≦V_{IN}≦-11.4V 1.0mA≦I_{OUT}≦40mA		-9.45	-	-8.55	V
			V_{IN}=-15V, 1.0mA≦I_{OUT}≦70mA		-9.45	-	-8.55	
Quiescent Current	I_B	1	T_j=25℃		-	3.2	6.5	mA
			T_j=125℃		-	-	6.0	
Quiescent Current Change	ΔI_{BI}	1	-24V≦V_{IN}≦-12V		-	-	1.5	mA
	ΔI_{BO}		1.0mA≦I_{OUT}≦40mA		-	-	0.1	
Output Noise Voltage	V_{NO}	3	Ta=25℃, 10Hz≦f≦100kHz		-	65	-	μV_{rms}
Long Term Stability	$\Delta V_{OUT}/\Delta t$	1			-	21	-	mV/1.0kHrs
Ripple Rejection Ratio	RR	2	-24V≦V_{IN}≦-12V, T_j=25℃, f=120Hz		36	44	-	dB
Dropout Voltage	$\lvert V_{IN}-V_{OUT}\rvert$	1	T_j=25℃, I_{OUT}=40mA		-	1.7	-	V
Average Temperature Coefficient of Output Voltage	TC_{VO}	1	I_{OUT}=5mA		-	-0.85	-	mV/℃

Downloaded from Elcodis.com electronic components distributor

ELECTRICAL CHARACTERISTICS

KIA79L10F

(Unless otherwise specified, V_{IN}=-16V, I_{OUT}=40mA, C_{IN}=0.33㎌, C_{OUT}=0.1㎌, 0℃≦T_j≦125℃)

CHARACTERISTIC	SYMBOL	TEST CIRCUIT	TEST CONDITION		MIN.	TYP.	MAX.	UNIT
Output Voltage	V_{OUT}	1	T_j=25℃		-10.4	-10.0	-9.6	V
Input Regulation	Reg line	1	T_j=25℃	-25V≦V_{IN}≦-12.5V	-	80	230	mV
				-25V≦V_{IN}≦-13V	-	30	170	
Load Regulation	Reg load	1	T_j=25℃	1.0mA≦I_{OUT}≦100mA	-	18	90	mV
				1.0mA≦I_{OUT}≦40mA	-	8.5	45	
Output Voltage	V_{OUT}	1	-25V≦V_{IN}≦-12.5V 1.0mA≦I_{OUT}≦40mA		-10.5	-	-9.5	V
			V_{IN}=-16V, 1.0mA≦I_{OUT}≦70mA		-10.5	-	-9.5	
Quiescent Current	I_B	1	T_j=25℃		-	3.2	6.5	mA
			T_j=125℃		-	-	6.0	
Quiescent Current Change	ΔI_{BI}	1	-25V≦V_{IN}≦-13V		-	-	1.5	mA
	ΔI_{BO}		1.0mA≦I_{OUT}≦40mA		-	-	0.1	
Output Noise Voltage	V_{NO}	3	Ta=25℃, 10Hz≦f≦100kHz		-	70	-	μV_{rms}
Long Term Stability	$\Delta V_{OUT}/\Delta t$	1			-	22	-	mV/ 1.0kHrs
Ripple Rejection Ratio	RR	2	-24V≦V_{IN}≦-13V, T_j=25℃, f=120Hz		36	43	-	dB
Dropout Voltage	$\lvert V_{IN}-V_{OUT} \rvert$	1	T_j=25℃, I_{OUT}=40mA		-	1.7	-	V
Average Temperature Coefficient of Output Voltage	TC_{VO}	1	I_{OUT}=5mA		-	-0.9	-	mV/℃

Downloaded from Elcodis.com electronic components distributor

ELECTRICAL CHARACTERISTICS

KIA79L12F

(Unless otherwise specified, V_{IN}=-19V, I_{OUT}=40mA, C_{IN}=0.33μF, C_{OUT}=0.1μF, 0℃≦T_j≦125℃)

CHARACTERISTIC	SYMBOL	TEST CIRCUIT	TEST CONDITION		MIN.	TYP.	MAX.	UNIT
Output Voltage	V_{OUT}	1	T_j=25℃		-12.5	-12.0	-11.5	V
Input Regulation	Reg line	1	T_j=25℃	-27V≦V_{IN}≦-14.5V	-	120	250	mV
				-27V≦V_{IN}≦-16V	-	100	200	
Load Regulation	Reg load	1	T_j=25℃	1.0mA≦I_{OUT}≦100mA	-	20	100	mV
				1.0mA≦I_{OUT}≦40mA	-	10	50	
Output Voltage	V_{OUT}	1	-27V≦V_{IN}≦-14.5V 1.0mA≦I_{OUT}≦40mA		-12.6	-	-11.4	V
			V_{IN}=-19V, 1.0mA≦I_{OUT}≦70mA		-12.6	-	-11.4	
Quiescent Current	I_B	1	T_j=25℃		-	3.2	6.5	mA
			T_j=125℃		-	-	6.0	
Quiescent Current Change	ΔI_{BI}	1	-27V≦V_{IN}≦-16V		-	-	1.5	mA
	ΔI_{BO}		1.0mA≦I_{OUT}≦40mA		-	-	0.1	
Output Noise Voltage	V_{NO}	3	Ta=25℃, 10Hz≦f≦100kHz		-	80	-	μV_{rms}
Long Term Stability	$\Delta V_{OUT}/\Delta t$	1			-	24	-	mV/1.0kHrs
Ripple Rejection Ratio	RR	2	-25V≦V_{IN}≦-15V, T_j=25℃, f=120Hz		37	42	-	dB
Dropout Voltage	$\lvert V_{IN}-V_{OUT} \rvert$	1	T_j=25℃, I_{OUT}=40mA		-	1.7	-	V
Average Temperature Coefficient of Output Voltage	TC_{VO}	1	I_{OUT}=5mA		-	-1.0	-	mV/℃

Downloaded from Elcodis.com electronic components distributor

ELECTRICAL CHARACTERISTICS

KIA79L15F

(Unless otherwise specified, V_{IN}=-23V, I_{OUT}=40mA, C_{IN}=0.33μF, C_{OUT}=0.1μF, 0℃≦T_j≦125℃)

CHARACTERISTIC	SYMBOL	TEST CIRCUIT	TEST CONDITION		MIN.	TYP.	MAX.	UNIT
Output Voltage	V_{OUT}	1	T_j=25℃		-15.6	-15.0	-14.4	V
Input Regulation	Reg line	1	T_j=25℃	-30V≦V_{IN}≦-17.5V	-	130	300	mV
				-30V≦V_{IN}≦-20V	-	110	250	
Load Regulation	Reg load	1	T_j=25℃	1.0mA≦I_{OUT}≦100mA	-	25	150	mV
				1.0mA≦I_{OUT}≦40mA	-	12	75	
Output Voltage	V_{OUT}	1	-30V≦V_{IN}≦-17.5V 1.0mA≦I_{OUT}≦40mA		-15.75	-	-14.25	V
			V_{IN}=-23V, 1.0mA≦I_{OUT}≦70mA		-15.75	-	-14.25	
Quiescent Current	I_B	1	T_j=25℃		-	3.3	6.5	mA
			T_j=125℃		-	-	6.0	
Quiescent Current Change	ΔI_{BI}	1	-30V≦V_{IN}≦-20V		-	-	1.5	mA
	ΔI_{BO}		1.0mA≦I_{OUT}≦40mA		-	-	0.1	
Output Noise Voltage	V_{NO}	3	Ta=25℃, 10Hz≦f≦100kHz		-	90	-	μV_{rms}
Long Term Stability	$\Delta V_{OUT}/\Delta t$	1			-	30	-	mV/ 1.0kHrs
Ripple Rejection Ratio	RR	2	-28.5V≦V_{IN}≦-18.5V, T_j=25℃, f=120Hz		34	39	-	dB
Dropout Voltage	$\lvert V_{IN}-V_{OUT} \rvert$	1	T_j=25℃, I_{OUT}=40mA		-	1.7	-	V
Average Temperature Coefficient of Output Voltage	TC_{VO}	1	I_{OUT}=5mA		-	-1.3	-	mV/℃

Downloaded from Elcodis.com electronic components distributor

ELECTRICAL CHARACTERISTICS

KIA79L18F

(Unless otherwise specified, V_{IN}=-27V, I_{OUT}=40mA, C_{IN}=0.33μF, C_{OUT}=0.1μF, 0℃≦T_j≦125℃)

CHARACTERISTIC	SYMBOL	TEST CIRCUIT	TEST CONDITION		MIN.	TYP.	MAX.	UNIT
Output Voltage	V_{OUT}	1	T_j=25℃		-18.7	-18.0	-17.3	V
Input Regulation	Reg line	1	T_j=25℃	-33V≦V_{IN}≦-20.7V	-	32	325	mV
				-33V≦V_{IN}≦-21V	-	27	275	
Load Regulation	Reg load	1	T_j=25℃	1.0mA≦I_{OUT}≦100mA	-	30	170	mV
				1.0mA≦I_{OUT}≦40mA	-	15	75	
Output Voltage	V_{OUT}	1	-33V≦V_{IN}≦-20.9V 1.0mA≦I_{OUT}≦40mA		-18.9	-	-17.1	V
			V_{IN}=-27V, 1.0mA≦I_{OUT}≦70mA		-18.9	-	-17.1	
Quiescent Current	I_B	1	T_j=25℃		-	3.3	6.5	mA
			T_j=125℃		-	-	6.0	
Quiescent Current Change	ΔI_{BI}	1	-33V≦V_{IN}≦-21V		-	-	1.5	mA
	ΔI_{BO}		1.0mA≦I_{OUT}≦40mA		-	-	0.1	
Output Noise Voltage	V_{NO}	3	Ta=25℃, 10Hz≦f≦100kHz		-	150	-	μV_{rms}
Long Term Stability	$\Delta V_{OUT}/\Delta t$	1			-	45	-	mV/1.0kHrs
Ripple Rejection Ratio	RR	2	-33V≦V_{IN}≦-23V, T_j=25℃, f=120Hz		33	48	-	dB
Dropout Voltage	$\lvert V_{IN}-V_{OUT} \rvert$	1	T_j=25℃, I_{OUT}=40mA		-	1.7	-	V
Average Temperature Coefficient of Output Voltage	TC_{VO}	1	I_{OUT}=5mA		-	-1.5	-	mV/℃

Downloaded from Elcodis.com electronic components distributor

ELECTRICAL CHARACTERISTICS

KIA79L20F

(Unless otherwise specified, V_{IN}=-29V, I_{OUT}=40mA, C_{IN}=0.33μF, C_{OUT}=0.1μF, 0℃≦T_j≦125℃)

CHARACTERISTIC	SYMBOL	TEST CIRCUIT	TEST CONDITION		MIN.	TYP.	MAX.	UNIT
Output Voltage	V_{OUT}	1	T_j=25℃		-20.8	-20.0	-19.2	V
Input Regulation	Reg line	1	T_j=25℃	-35V≦V_{IN}≦-23.5V	-	33	330	mV
				-35V≦V_{IN}≦-24V	-	28	285	
Load Regulation	Reg load	1	T_j=25℃	1.0mA≦I_{OUT}≦100mA	-	33	180	mV
				1.0mA≦I_{OUT}≦40mA	-	17	90	
Output Voltage	V_{OUT}	1	-35V≦V_{IN}≦-23.5V 1.0mA≦I_{OUT}≦40mA		-21.0	-	-19.0	V
			V_{IN}=-29V, 1.0mA≦I_{OUT}≦70mA		-21.0	-	-19.0	
Quiescent Current	I_B	1	T_j=25℃		-	3.3	6.5	mA
			T_j=125℃		-	-	6.0	
Quiescent Current Change	ΔI_{BI}	1	-35V≦V_{IN}≦-24V		-	-	1.5	mA
	ΔI_{BO}		1.0mA≦I_{OUT}≦40mA		-	-	0.1	
Output Noise Voltage	V_{NO}	3	Ta=25℃, 10Hz≦f≦100kHz		-	170	-	μV_{rms}
Long Term Stability	$\Delta V_{OUT}/\Delta t$	1			-	49	-	mV/ 1.0kHrs
Ripple Rejection Ratio	RR	2	-35V≦V_{IN}≦-27V, T_j=25℃, f=120Hz		31	37	-	dB
Dropout Voltage	$\lvert V_{IN}-V_{OUT} \rvert$	1	T_j=25℃, I_{OUT}=40mA		-	1.7	-	V
Average Temperature Coefficient of Output Voltage	TC_{VO}	1	I_{OUT}=5mA		-	-1.7	-	mV/℃

Downloaded from Elcodis.com electronic components distributor

ELECTRICAL CHARACTERISTICS

KIA79L24F

(Unless otherwise specified, V_{IN}=-33V, I_{OUT}=40mA, C_{IN}=0.33μF, C_{OUT}=0.1μF, 0℃≦T_j≦125℃)

CHARACTERISTIC	SYMBOL	TEST CIRCUIT	TEST CONDITION		MIN.	TYP.	MAX.	UNIT
Output Voltage	V_{OUT}	1	T_j=25℃		-25.0	-24.0	-23.0	V
Input Regulation	Reg line	1	T_j=25℃	-38V≦V_{IN}≦-27V	-	35	350	mV
				-38V≦V_{IN}≦-28V	-	30	300	
Load Regulation	Reg load	1	T_j=25℃	1.0mA≦I_{OUT}≦100mA	-	40	200	mV
				1.0mA≦I_{OUT}≦40mA	-	20	100	
Output Voltage	V_{OUT}	1	-38V≦V_{IN}≦-27V 1.0mA≦I_{OUT}≦40mA		-25.2	-	-22.8	V
			V_{IN}=-33V, 1.0mA≦I_{OUT}≦70mA		-25.2	-	-22.8	
Quiescent Current	I_B	1	T_j=25℃		-	3.5	6.5	mA
			T_j=125℃		-	-	6.0	
Quiescent Current Change	ΔI_{BI}	1	-38V≦V_{IN}≦-28V		-	-	1.5	mA
	ΔI_{BO}		1.0mA≦I_{OUT}≦40mA		-	-	0.1	
Output Noise Voltage	V_{NO}	3	Ta=25℃, 10Hz≦f≦100kHz		-	200	-	μV_{rms}
Long Term Stability	$\Delta V_{OUT}/\Delta t$	1			-	56	-	mV/1.0kHrs
Ripple Rejection Ratio	RR	2	-35V≦V_{IN}≦-29V, T_j=25℃, f=120Hz		31	47	-	dB
Dropout Voltage	$\lvert V_{IN}-V_{OUT} \rvert$	1	T_j=25℃, I_{OUT}=40mA		-	1.7	-	V
Average Temperature Coefficient of Output Voltage	TC_{VO}	1	I_{OUT}=5mA		-	-2.0	-	mV/℃

Downloaded from Elcodis.com electronic components distributor

TEST CIRCUIT 1

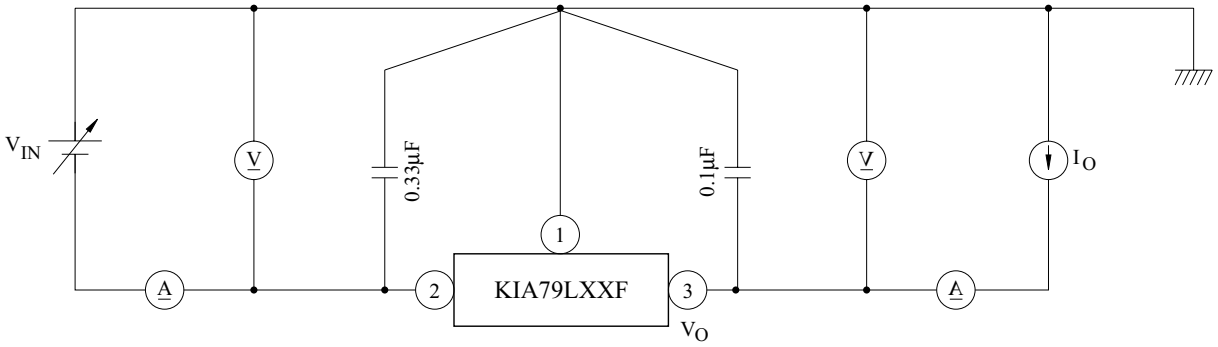

TEST CIRCUIT 2

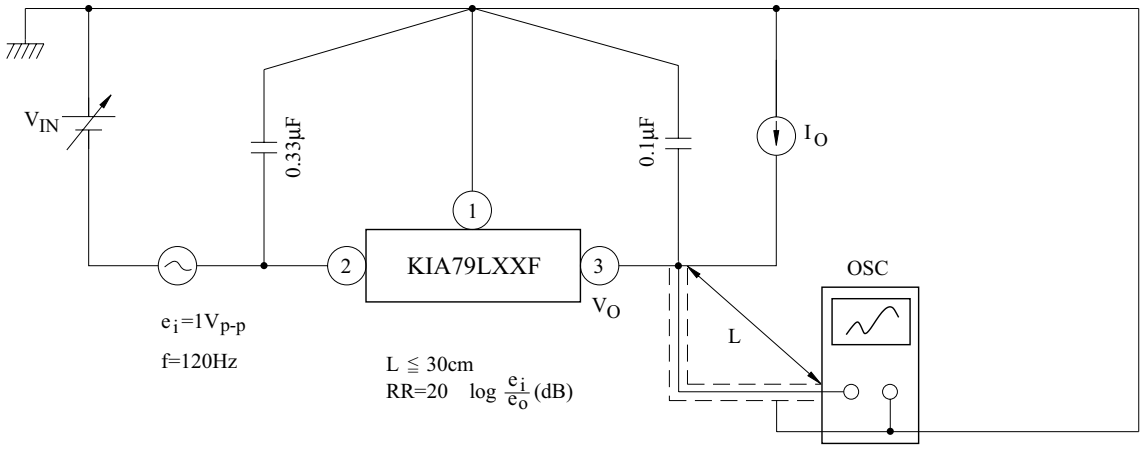

TEST CIRCUIT 3

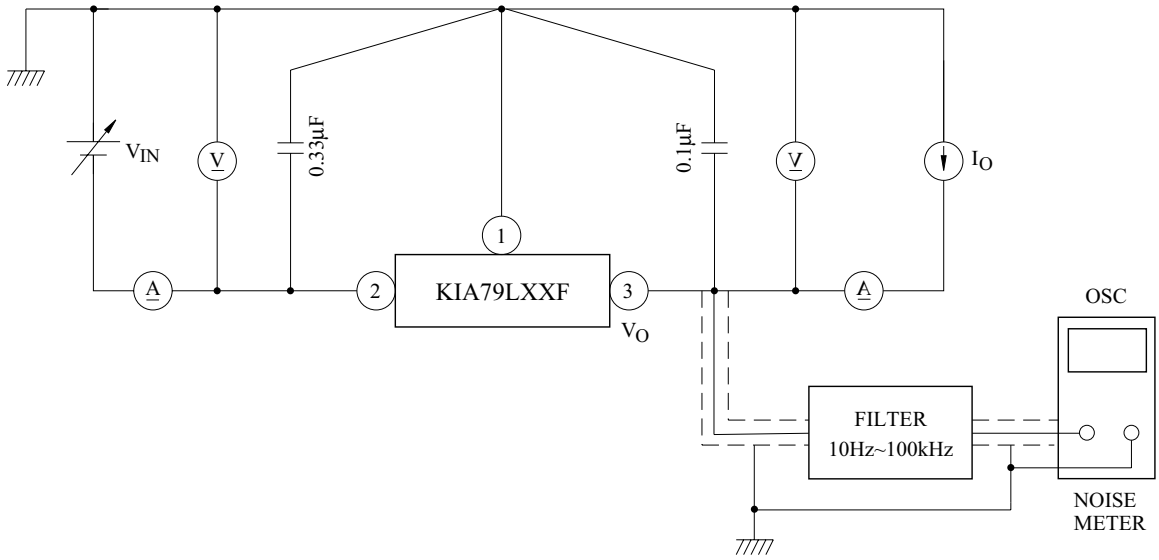

Downloaded from Elcodis.com electronic components distributor

P_D MAX. - Ta

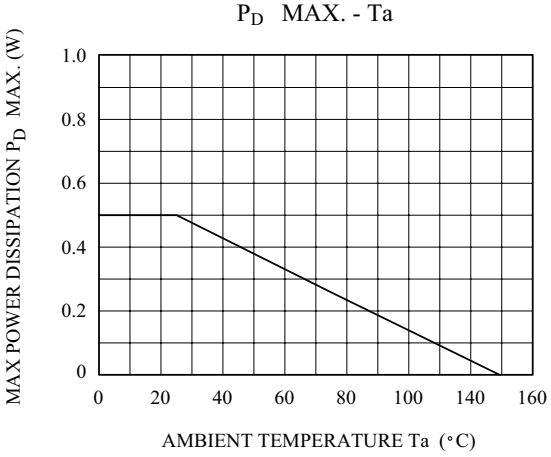

$|V_{IN} - V_{OUT}|$ - T_j

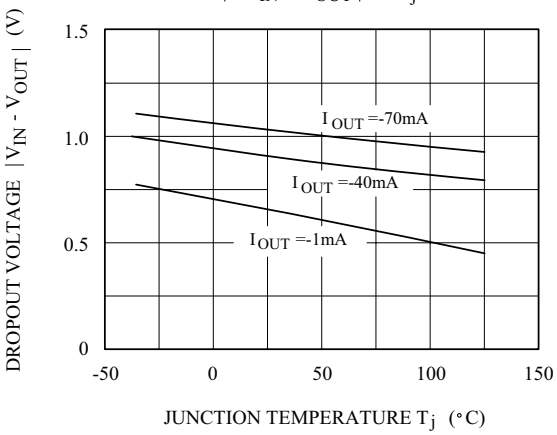

V_{OUT} - V_{IN}

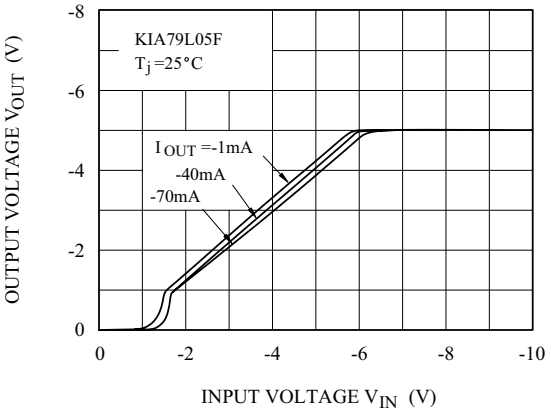

I_B - V_{IN}

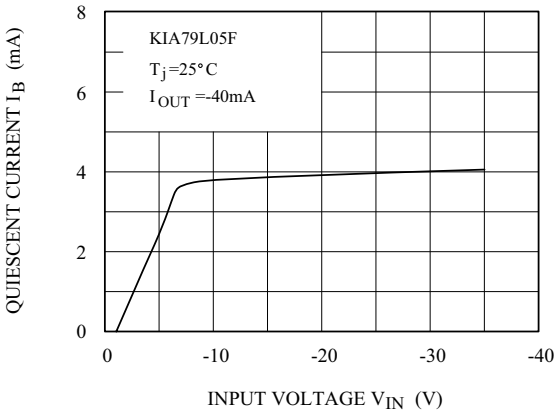

V_{OUT} - I_{OUT}

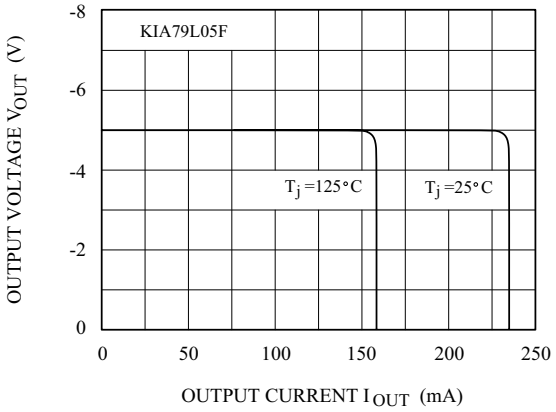

Downloaded from Elcodis.com electronic components distributor

PRECAUTIONS FOR USE

SOLDERING

Flat Package (SOT-89 Package)

Elements mounting styles of electronic devices are gaining in further diversification over recent years, and needs for components are all the more expanding in varieties. Especially, surface mounting is steadily penetrating into industrial segments as a world-wide popular technical trend. Although exposure to high temperature is inevitable during soldering we recommend limiting the soldering temperature to low levels as shown in figure for the sake of retaining inherent excellent reliability.

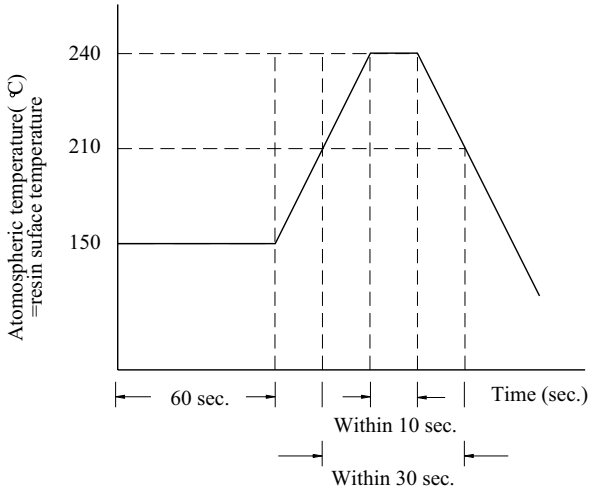

Fig 6

(a) When employing solder reflow method

① Atmospheric temperature around resin surfaces must be less than 240 ℃, not exceeding the time length of 10 sec.

② Recommend temperature profile

③ Precautions on heating method

When resin in kept exposed to high temperature for a long time, device reliability may be marred.

Therefore, it is essential to complete soldering in the shortest time possible to prevent temperature of resin from rising.

(b) When employing halogen lamps or infrared-ray heaters

When halogen lamps or infrared-ray heaters are used, avoid direct irradiation onto resin surfaces ;

such devices cause extensive localized temperature rise.

※ Please keep a reflow solder operating when SOT-89 package's soldering.

Downloaded from Elcodis.com electronic components distributor