# TYN612M

## 12A SCR

**Table 1: Main Features**

| Symbol | Value | Unit |
|---|---|---|
| $I_{T(RMS)}$ | 12 | A |
| $V_{DRM}/V_{RRM}$ | 600 | V |
| $I_{GT}$ (min./max.) | 1.5 / 5 | mA |


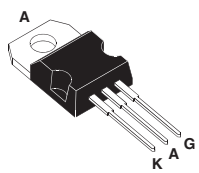


**TO-220AB (TYN612MRG)**

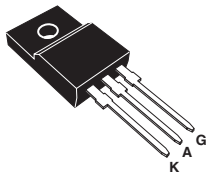


**TO-220FPAB (TYN612MFP)**

### DESCRIPTION

The TYN612M SCR is suitable to fit modes of control found in applications such as voltage regulation circuits for motorbikes, overvoltage crowbar protection, motor control circuits in power tools and kitchen aids, inrush current limiting circuits, capacitive discharge ignition.

The insulated fullpack package allows a back to back configuration.

**Table 2: Order Codes**

| Part Number | Marking |
|---|---|
| TYN612MRG | TYN612M |
| TYN612MFP | TYN612MFP |

**Table 3: Absolute Ratings** (limiting values)

| Symbol | Parameter | | | Value | Unit |
|---|---|---|---|---|---|
| $I_{T(RMS)}$ | RMS on-state current (180° conduction angle) | TO-220AB | Tc = 105°C | 12 | A |
| | | TO-220FPAB | Tc = 70°C | 12 | |
| $I_{T(AV)}$ | Average on-state current (180° conduction angle) | TO-220AB | Tc = 105°C | 8 | A |
| | | TO-220FPAB | Tc = 70°C | 8 | |
| $I_{TSM}$ | Non repetitive surge peak on-state current | tp = 8.3 ms | Tj = 25°C | 125 | A |
| | | tp = 10 ms | | 120 | |
| $I^2t$ | $I^2t$ Value for fusing | tp = 10 ms | Tj = 25°C | 72 | $A^2s$ |
| dI/dt | Critical rate of rise of on-state current $I_G = 2 \times I_{GT}$ , tr ≤ 100 ns | F = 60 Hz | Tj = 125°C | 50 | A/µs |
| $I_{GM}$ | Peak gate current | tp = 20 µs | Tj = 125°C | 4 | A |
| $P_{G(AV)}$ | Average gate power dissipation | | Tj = 125°C | 1 | W |
| $T_{stg}$<br>Tj | Storage junction temperature range<br>Operating junction temperature range | | | - 40 to + 150<br>- 40 to + 125 | °C |
| $V_{RGM}$ | Maximum peak reverse gate voltage | | | 5 | V |

**Tables 4: Electrical Characteristics** ($T_j$ = 25°C, unless otherwise specified)

| Symbol | Test Conditions | | | Value | Unit |
|---|---|---|---|---|---|
| $I_{GT}$ | $V_D$ = 12 V $R_L$ = 140 Ω | | MIN. | 1.5 | mA |
| | | | MAX. | 5 | |
| $V_{GT}$ | | | MAX. | 1.3 | V |
| $V_{GD}$ | $V_D = V_{DRM}$ $R_L$ = 3.3 kΩ | Tj = 125°C | MIN. | 0.2 | V |
| $I_H$ | $I_T$ = 500 mA Gate open | | MAX. | 20 | mA |
| $I_L$ | $I_G = 1.2\ I_{GT}$ | | MAX. | 40 | mA |
| dV/dt | $V_D$ = 67 % $V_{DRM}$ Gate open | Tj = 125°C | MIN. | 50 | V/µs |
| $V_{TM}$ | $I_{TM}$ = 24 A tp = 380 µs | Tj = 25°C | MAX. | 1.6 | V |
| $V_{t0}$ | Threshold voltage | Tj = 125°C | MAX. | 0.85 | V |
| $R_d$ | Dynamic resistance | Tj = 125°C | MAX. | 30 | mΩ |
| $I_{DRM}$ | $V_{DRM} = V_{RRM}$ | Tj = 25°C | MAX. | 5 | µA |
| $I_{RRM}$ | | Tj = 125°C | | 2 | mA |

**Table 5: Thermal Resistances**

| Symbol | Parameter | | Value | Unit |
|---|---|---|---|---|
| $R_{th(j-c)}$ | Junction to case (DC) | TO-220AB | 1.3 | °C/W |
| | | TO-220FPAB | 4.5 | |
| $R_{th(j-a)}$ | Junction to ambient | TO-220AB | 55 | °C/W |
| | | TO-220FPAB | 55 | |

**Table 6: Product Selector**

| Part Number | Voltage | Sensitivity | Package |
|---|---|---|---|
| TYN612MRG | 600V | 5mA | TO-220AB |
| TYN612MFP | 600V | 5mA | TO-220FPAB |

**Figure 1: Maximum average power dissipation versus average on-state current**

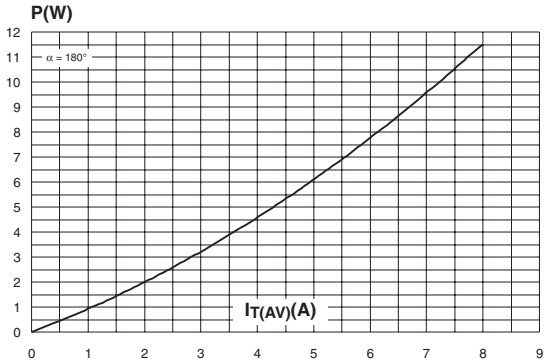


**Figure 2: Average and D.C. on-state current versus case temperature (TO-220AB)**

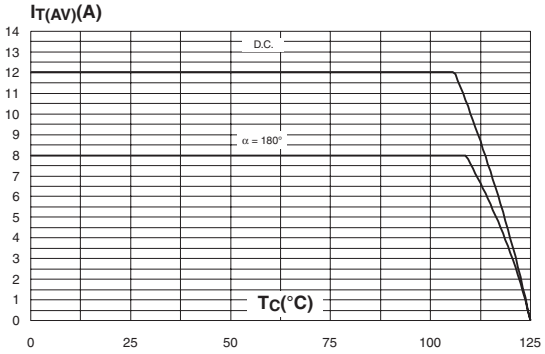


**Figure 3: Average and D.C. on-state current versus case temperature (TO-220FPAB)**

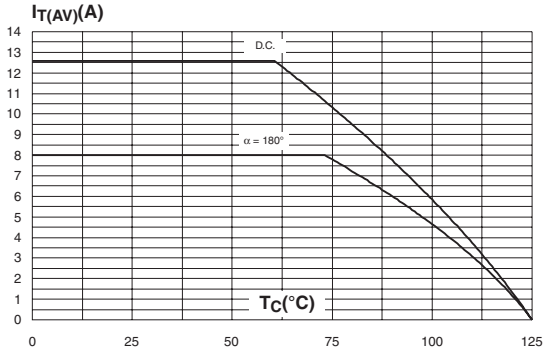


**Figure 4: Relative variation of thermal impedance versus pulse duration (TO-220AB)**

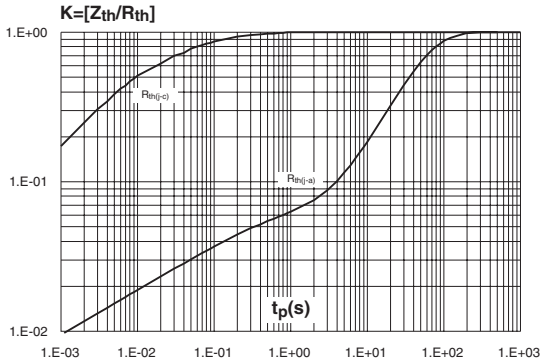


**Figure 5: Relative variation of thermal impedance versus pulse duration (TO-220FPAB)**

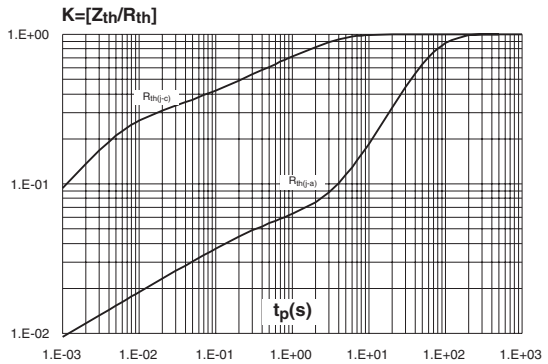


**Figure 6: Relative variation of gate trigger current, holding current and latching current versus junction temperature (typical values)**

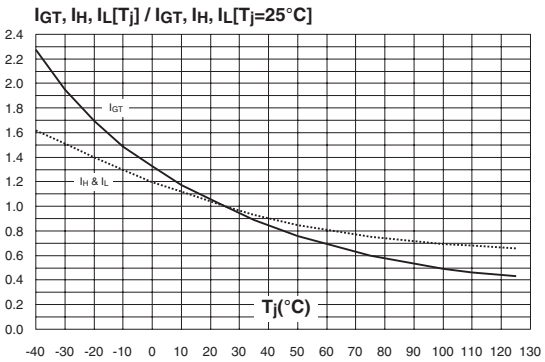

**Figure 7: Surge peak on-state current versus number of cycles**

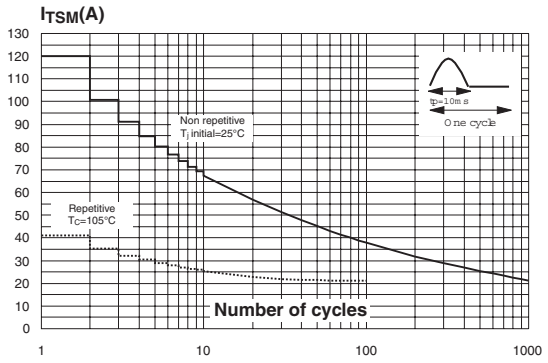


**Figure 8: Non repetitive surge peak on-state current for a sinusoidal pulse with width tp<10ms, and corresponding value of $I^2t$**

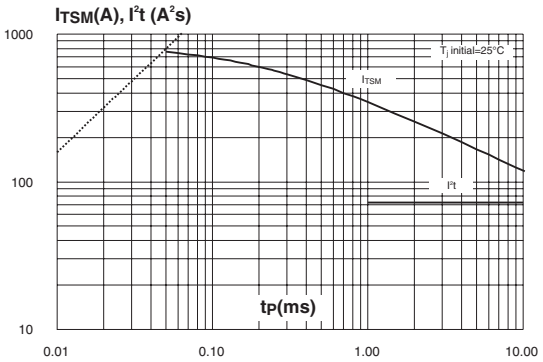


**Figure 9: On-state characteristics (maximum values)**

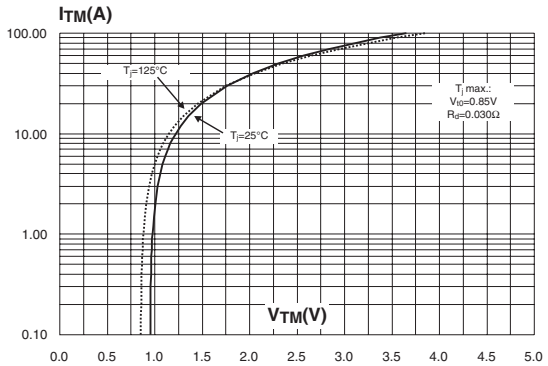


**Figure 10: Ordering Information Scheme**

**TYN 6 12 M FP RG**

**Standard SCR**

**Voltage**
6 = 600V

**Current**
12 = 12A

**Sensitivity**
M = 5mA

**Package**
FP = TO-220FPAB
Blank = TO-220AB

**Packing mode**
RG = Tube (TO-220AB)
Blank = Tube (TO-220FPAB)

**Figure 11: TO-220AB Package Mechanical Data**

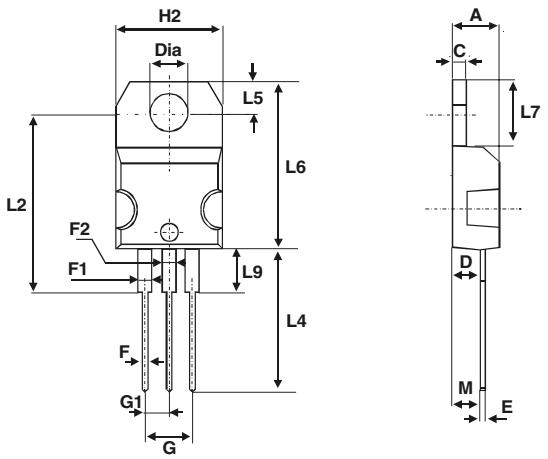


| REF. | DIMENSIONS | | | |
|---|---|---|---|---|
| | Millimeters | | Inches | |
| | Min. | Max. | Min. | Max. |
| A | 4.40 | 4.60 | 0.173 | 0.181 |
| C | 1.23 | 1.32 | 0.048 | 0.051 |
| D | 2.40 | 2.72 | 0.094 | 0.107 |
| E | 0.49 | 0.70 | 0.019 | 0.027 |
| F | 0.61 | 0.88 | 0.024 | 0.034 |
| F1 | 1.14 | 1.70 | 0.044 | 0.066 |
| F2 | 1.14 | 1.70 | 0.044 | 0.066 |
| G | 4.95 | 5.15 | 0.194 | 0.202 |
| G1 | 2.40 | 2.70 | 0.094 | 0.106 |
| H2 | 10 | 10.40 | 0.393 | 0.409 |
| L2 | 16.4 typ. | | 0.645 typ. | |
| L4 | 13 | 14 | 0.511 | 0.551 |
| L5 | 2.65 | 2.95 | 0.104 | 0.116 |
| L6 | 15.25 | 15.75 | 0.600 | 0.620 |
| L7 | 6.20 | 6.60 | 0.244 | 0.259 |
| L9 | 3.50 | 3.93 | 0.137 | 0.154 |
| M | 2.6 typ. | | 0.102 typ. | |
| Diam. | 3.75 | 3.85 | 0.147 | 0.151 |

**Figure 12: TO-220FPAB Package Mechanical Data**

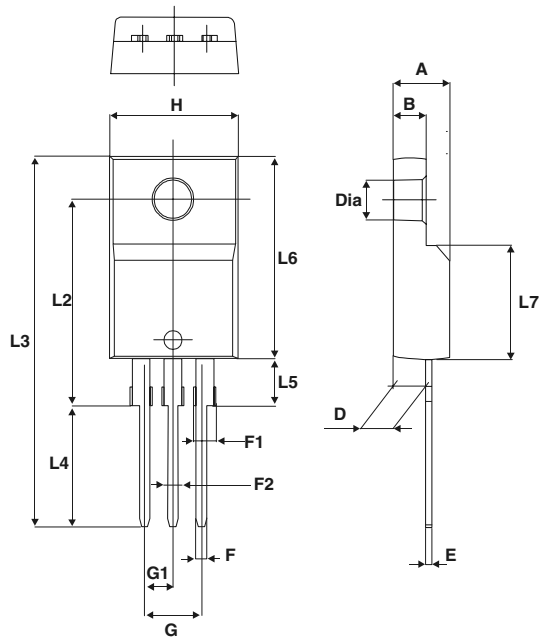


| REF. | DIMENSIONS | | | |
|---|---|---|---|---|
| | Millimeters | | Inches | |
| | Min. | Max. | Min. | Max. |
| A | 4.4 | 4.6 | 0.173 | 0.181 |
| B | 2.5 | 2.7 | 0.098 | 0.106 |
| D | 2.5 | 2.75 | 0.098 | 0.108 |
| E | 0.45 | 0.70 | 0.018 | 0.027 |
| F | 0.75 | 1 | 0.030 | 0.039 |
| F1 | 1.15 | 1.70 | 0.045 | 0.067 |
| F2 | 1.15 | 1.70 | 0.045 | 0.067 |
| G | 4.95 | 5.20 | 0.195 | 0.205 |
| G1 | 2.4 | 2.7 | 0.094 | 0.106 |
| H | 10 | 10.4 | 0.393 | 0.409 |
| L2 | 16 Typ. | | 0.63 Typ. | |
| L3 | 28.6 | 30.6 | 1.126 | 1.205 |
| L4 | 9.8 | 10.6 | 0.386 | 0.417 |
| L5 | 2.9 | 3.6 | 0.114 | 0.142 |
| L6 | 15.9 | 16.4 | 0.626 | 0.646 |
| L7 | 9.00 | 9.30 | 0.354 | 0.366 |
| Dia. | 3.00 | 3.20 | 0.118 | 0.126 |

**Table 7: Ordering Information**

| Ordering type | Marking | Package | Weight | Base qty | Delivery mode |
|---|---|---|---|---|---|
| TYN612MRG | TYN612M | TO-220AB | 2.3 g | 50 | Tube |
| TYN612MFP | TYN612MFP | TO-220FPAB | 2 g | 50 | Tube |

**Table 8: Revision History**

| Date | Revision | Description of Changes |
|---|---|---|
| Sep-2002 | 1A | Last update. |
| 10-Fev-2005 | 2 | TO-220FPAB package added. |