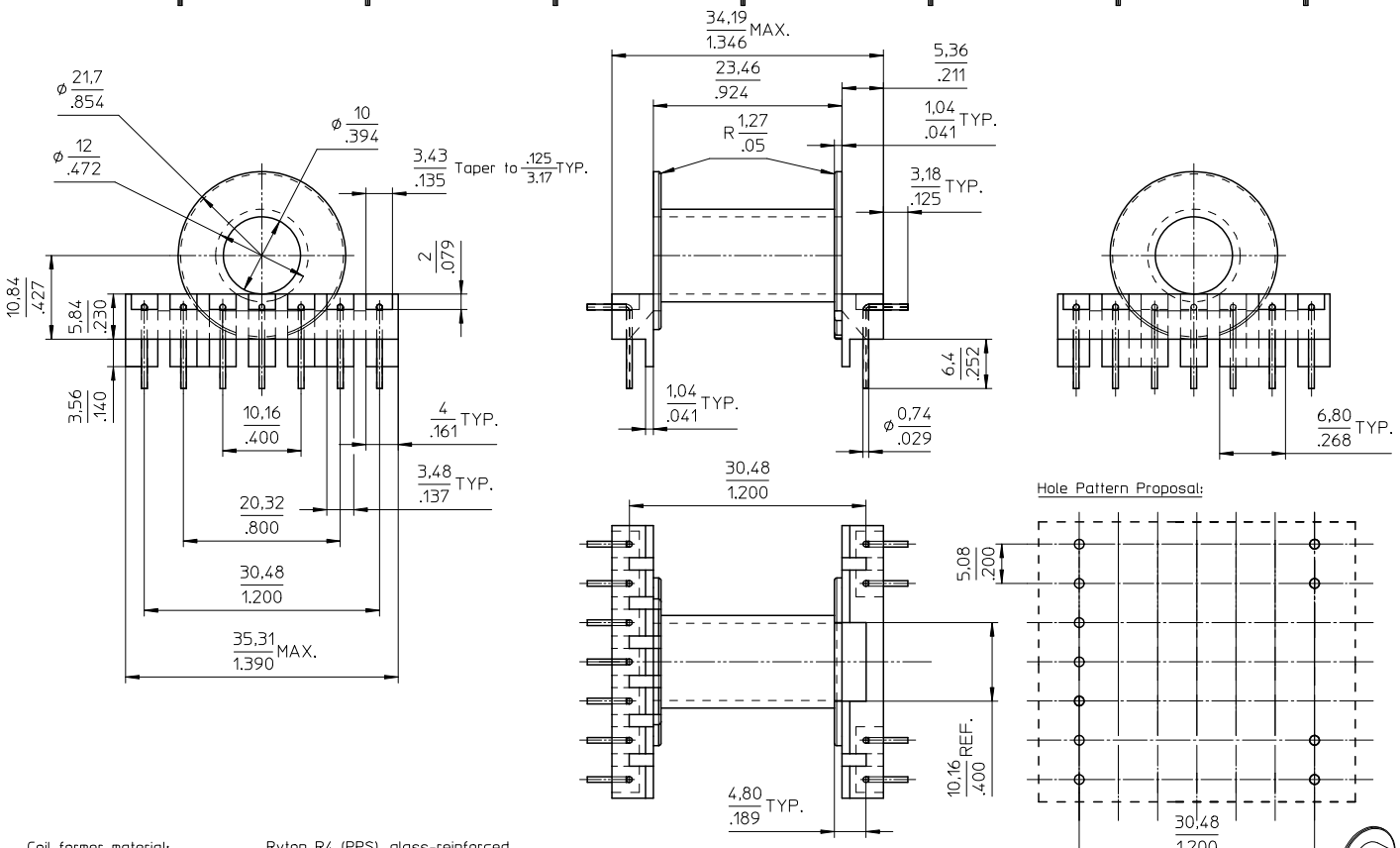

Coil former material:	Ryton R4 (PPS), glass-reinforced. UL file number: E54700 - UL94V-0.
max. operating temp:	180°C, class H
Pin material:	Alloy 510 Phosphor bronze electroplated with 0.000050 inch min. Nickel under 0.00012 inch min. 100% matte tin. Hardness: 96,000 - 115,000 psi Tensile Strength.
Resistance to soldering heat:	acc. to IEC 60 068-2-20 Part 2, Test Tb, method 1B, 350°C-3,5s.
Solderability:	acc. to IEC 60 068-2-20 Part 2, Test Ta, method 1, 235°C-2s.
Min. winding area:	0.1588 sq inch (102.5 sq mm)
Mean length of turn:	2.09 inch (53.1 mm)

CLASS.NO.	CSH-EC35-1S-11PD-A-Z	4335 060 41451	01-06-2001 / 26-10-2006 / 16-01-2008
PROJ. AMERK.			
NAME NAAM: A.Wojtasz	SUPERS. VERV.	1 SH BL. SH BL. 112 – 001	A3
MPA	CHECK CONTR.	DAT.	Property of Eigendom van © FERROXCUBE 2008

Downloaded from Elcodis.com electronic components distributor