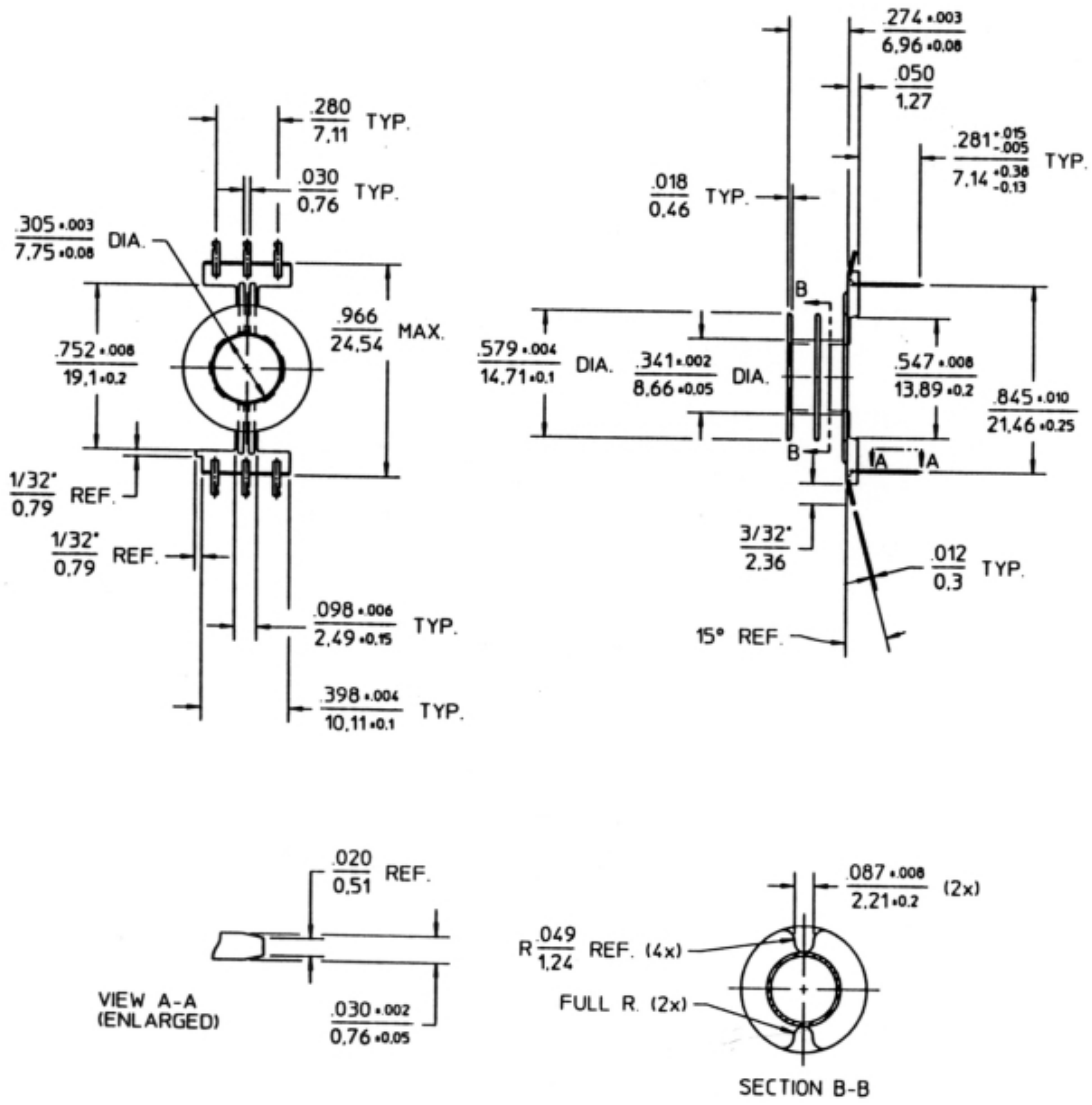

Coil former material: Zytel FR50 (PA), glass-reinforced
UL file number: E41938 - UL94V-0
Pin material: 70/30 Brass, SnPb plated
Solderability: acc. to MIL-STD 202, method 208
Mean length of turn: 1.445 inch
Winding area: 0.013 sq inch

–	**CPV-P18/11-2S-6PDL**	**4335 000 26461**	01-06-01

Downloaded from Elcodis.com electronic components distributor