Cascadable Silicon Bipolar MMIC Amplifier

Technical Data

MSA-0100

Features

- **Cascadable 50 Ω Gain Block**
- **3 dB Bandwidth:**
  DC to 1.3 GHz
- **High Gain:**
  18.5 dB Typical at 0.5 GHz
- **Unconditionally Stable (k>1)**

Description

The MSA-0100 is a high performance silicon bipolar Monolithic Microwave Integrated Circuit (MMIC) chip. This MMIC is designed for use as a general purpose 50 Ω gain block. Typical applications include narrow and broad band IF and RF amplifiers in commercial, industrial and military applications.

The MSA-series is fabricated using HP's 10 GHz f_T, 25 GHz f_{MAX}, silicon bipolar MMIC process which uses nitride self-alignment, ion implantation, and gold metallization to achieve excellent performance, uniformity and reliability. The use of an external bias resistor for temperature and current stability also allows bias flexibility.

The recommended assembly procedure is gold-eutectic die attach at 400°C and either wedge or ball bonding using 0.7 mil gold wire.[1] See APPLICATIONS section, "Chip Use".

Chip Outline[1]

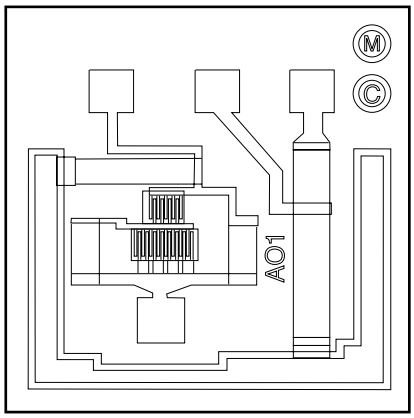

Note:

1. This chip contains additional biasing options. The performance specified applies only to the bias option whose bond pads are indicated on the chip outline. Refer to the APPLICATIONS section "Silicon MMIC Chip Use" for additional information.

Typical Biasing Configuration

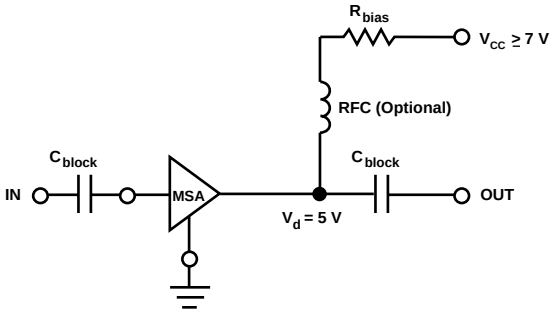

Downloaded from Elcodis.com electronic components distributor

MSA-0100 Absolute Maximum Ratings

Parameter	Absolute Maximum[1]
Device Current	40 mA
Power Dissipation[2,3]	200 mW
RF Input Power	+20 dBm
Junction Temperature	200°C
Storage Temperature	–65 to 200°C

Thermal Resistance[2,4]:
θ_{jc} = 45°C/W

Notes:
1. Permanent damage may occur if any of these limits are exceeded.
2. $T_{Mounting\ Surface}$ (T_{MS}) = 25°C.
3. Derate at 22.2 mW/°C for T_{MS} > 191 °C.
4. The small spot size of this technique results in a higher, though more accurate determination of θ_{jc} than do alternate methods. See MEASUREMENTS section "Thermal Resistance" for more information.

Electrical Specifications[1], T_A = 25°C

Symbol	Parameters and Test Conditions[2]: I_d = 17 mA, Z_O = 50 Ω		Units	Min.	Typ.	Max.
G_P	Power Gain ($\|S_{21}\|^2$)	f = 0.1 GHz	dB		19.0	
ΔG_P	Gain Flatness	f = 0.1 to 0.7 GHz	dB		± 0.6	
$f_{3\ dB}$	3 dB Bandwidth		GHz		1.3	
VSWR	Input VSWR	f = 0.1 to 3.0 GHz			1.3:1	
	Output VSWR	f = 0.1 to 3.0 GHz			1.3:1	
NF	50 Ω Noise Figure	f = 0.5 GHz	dB		5.5	
$P_{1\ dB}$	Output Power at 1 dB Gain Compression	f = 0.5 GHz	dBm		1.5	
IP_3	Third Order Intercept Point	f = 0.5 GHz	dBm		14.0	
t_D	Group Delay	f = 0.5 GHz	psec		150	
V_d	Device Voltage		V	4.5	5.0	5.5
dV/dT	Device Voltage Temperature Coefficient		mV/°C		–9.0	

Notes:
1. The recommended operating current range for this device is 13 to 25 mA. Typical performance as a function of current is on the following page.
2. RF performance of the chip is determined by packaging and testing 10 devices per wafer in a dual ground configuration.

Part Number Ordering Information

Part Number	Devices Per Tray
MSA-0100-GP4	100

Downloaded from Elcodis.com electronic components distributor

MSA-0100 Typical Scattering Parameters[1] (Z_O = 50 Ω, T_A = 25°C, I_d = 17 mA)

Freq. GHz	S_{11}		S_{21}			S_{12}			S_{22}	
	Mag	Ang	dB	Mag	Ang	dB	Mag	Ang	Mag	Ang
0.1	.08	171	19.0	8.91	174	–22.7	.073	2	.10	–11
0.2	.07	161	18.9	8.82	169	–22.5	.075	6	.11	–24
0.3	.07	152	18.8	8.72	163	–22.3	.077	9	.10	–35
0.4	.06	143	18.6	8.56	156	–22.4	.076	12	.11	–44
0.5	.06	133	18.5	8.37	151	–22.1	.079	14	.11	–53
0.6	.05	115	18.2	8.15	146	–21.9	.080	19	.12	–60
0.8	.04	84	17.7	7.68	136	–21.3	.086	22	.12	–75
1.0	.04	3	17.1	7.17	126	–20.3	.096	26	.12	–88
1.5	.08	–39	15.5	5.95	106	–19.3	.109	32	.10	–107
2.0	.12	–76	13.7	4.86	90	–17.9	.127	32	.08	–128
2.5	.15	–102	12.2	4.09	82	–16.9	.142	36	.06	–130
3.0	.19	–122	10.8	3.47	71	–16.4	.151	36	.06	–125
3.5	.25	–137	9.4	2.96	60	–15.6	.165	34	.07	–107
4.0	.27	–147	8.2	2.56	51	–15.2	.173	32	.10	–86
4.5	.28	–157	7.0	2.24	42	–14.8	.182	29	.13	–80
5.0	.28	–171	6.0	2.00	35	–14.4	.190	28	.16	–77

Note:

1. S-parameters are de-embedded from 70 mil package measured data using the package model found in the DEVICE MODELS section.

MSA-0100 Typical Performance, T_A = 25°C

(unless otherwise noted)

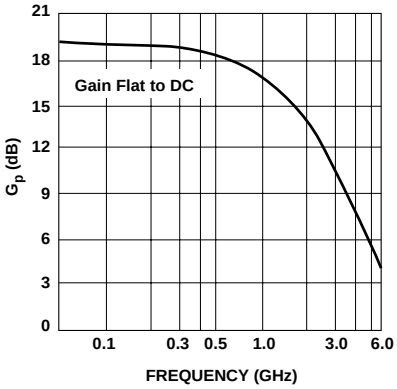

Figure 1. Typical Power Gain vs. Frequency, T_A = 25°C, I_d = 17 mA.

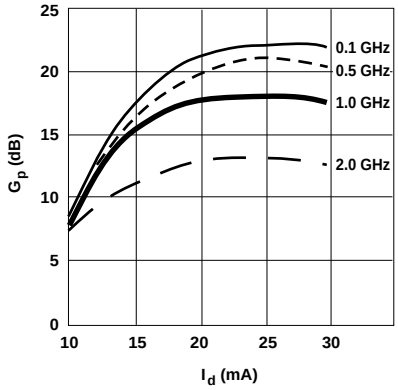

Figure 2. Power Gain vs. Current.

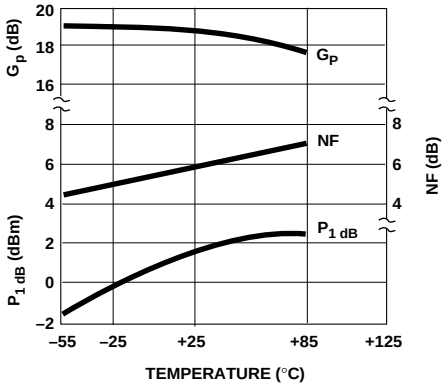

Figure 3. Output Power at 1 dB Gain Compression, NF and Power Gain vs. Mounting Surface Temperature, f = 0.5 GHz, I_d = 17 mA.

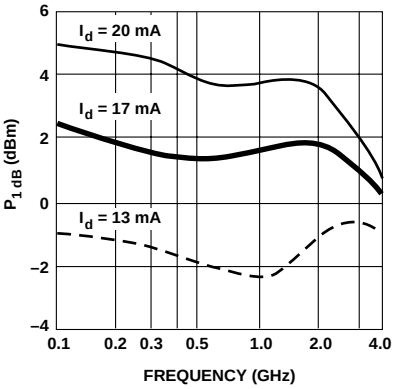

Figure 4. Output Power at 1 dB Gain Compression vs. Frequency.

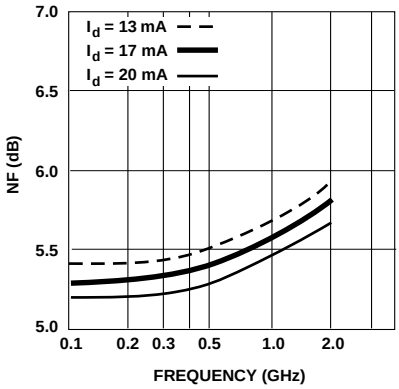

Figure 5. Noise Figure vs. Frequency.

Downloaded from Elcodis.com electronic components distributor

MSA-0100 Chip Dimensions

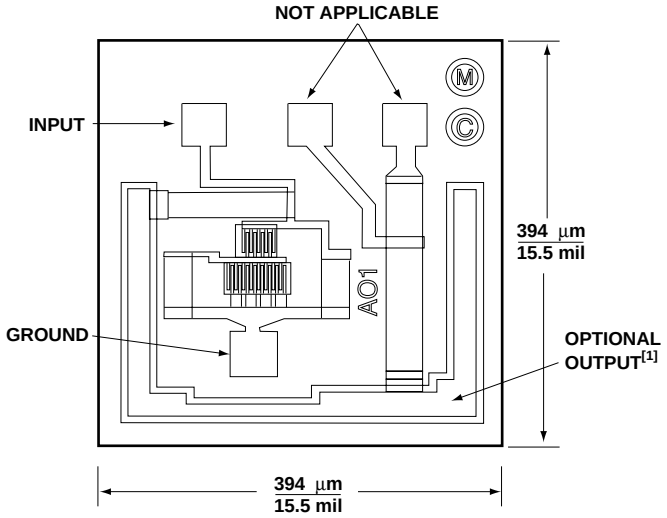

Chip thickness is 114 µm/4.5 mil. Bond Pads are 41 µm/1.6 mil typical on each side.
Note 1: Output contact is made by die attaching the backside of the die.

Downloaded from Elcodis.com electronic components distributor