ADC-307

8-BIT, 125 MHz LOW POWER FLASH A/D

PRODUCT DATA SHEET

Features

- 8-bit resolution
- ±1/2 LSB non-linearity
- 125 MHz conversion rate
- Low power consumption (870 mW)
- Analog input bandwidth 200 MHz
- Low input capacitance 17 pF
- Single supply operation -5.2 V

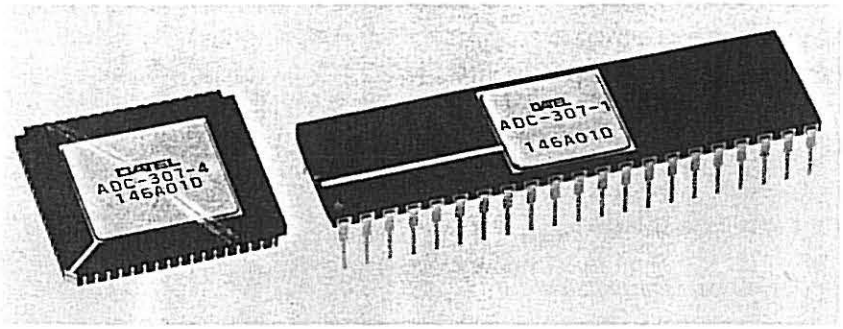

Applications

- Digital oscilloscopes
- High-speed data acquisition
- TV video encoding
- VCR digital systems
- Radar pulse analysis
- Transient analysis
- Medical electronics
- Sonar systems

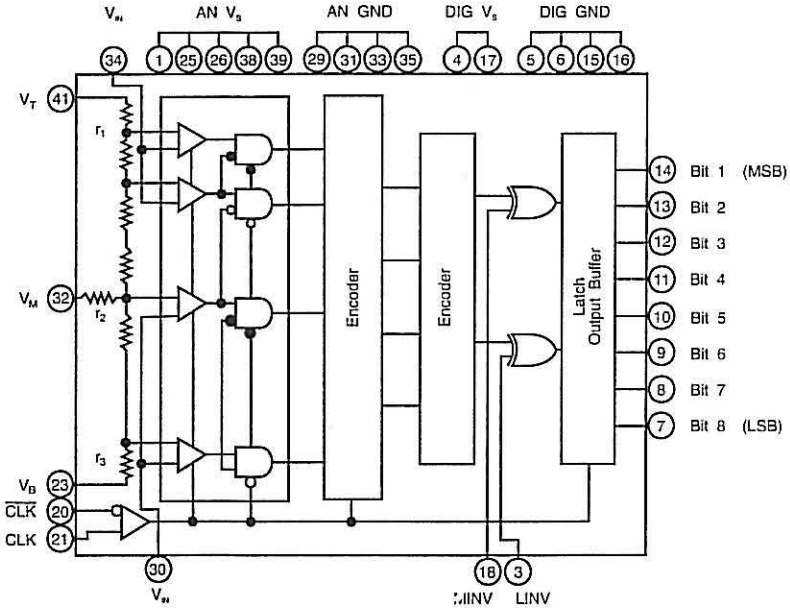

General Description

DATEL's ADC-307 is an 8-bit high-speed flash A/D converter IC capable of digitizing analog signals at a maximum rate of 125 MSPS. The ADC-307 is sparkle code error free up to Nyquist frequency. The digital I/O levels of this A/D converter are compatible with the ECL 100K/10KH/10K.

The ADC-307 is pin-compatible with the earlier model ADC-303. These can be replaced by the ADC-307 without any design changes in most cases. Compared with the earlier models, this new model has been greatly improved in performance, by incorporating advanced process, new circuit design and carefully considered layout.

ADC-307-4 Input/Output Connections (Top View)

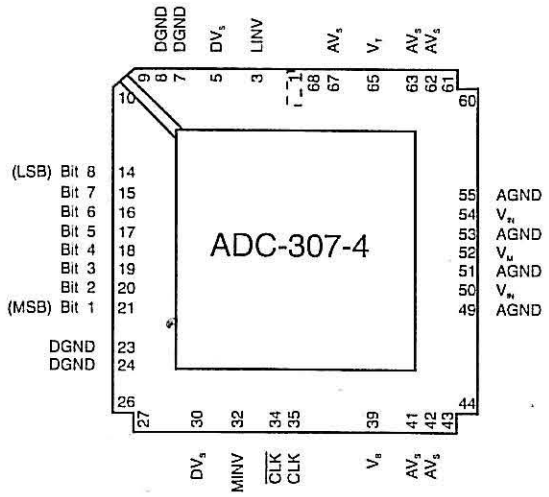

ADC-307-1 Input/Output Connections (Top View)

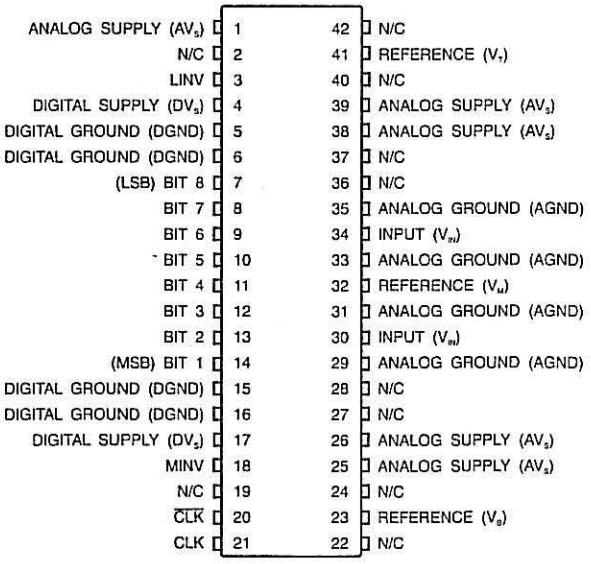

Table 2: Description

Inputs	Min.	Typ.	Max.	Units
Analog Input Voltage	–	0 ~ -2	–	V
Analog Input Capacitance (V_{IN} = -1V + 0.07V_{rms})	–	17	–	pF
Analog Input Resistance	–	190	–	kΩ
Analog Input Bias Current (V_{IN} = -1V)	–	130	320	µA
Digital Input Voltage V_H	-1.13	–	–	V
V_L	–	–	-1.50	V
Digital Input Current I_H	–	–	50	µA
I_L	–	–	50	µA
Digital Input Capacitance	–	7	–	pF
Reference Inputs				
Reference Input Voltage V_B	-2.2	-2.0	-1.8	V
V_T	-0.1	0	+0.1	V
Reference resistance R_{REF}	75	110	155	Ω
Residual resistance r1	–	0.6	–	Ω
(see block diagram) r2	–	2.0	–	Ω
r3	–	0.6	–	Ω
Offset Voltage V_B	10	15	20	mV
V_T	16	19	24	mV
Outputs				
Resolution	8	–	–	Bits
Digital output Logic "H" level	-1.10	–	–	V
Logic "L" level	–	–	-1.62	V
Output rising time (T_r)	–	0.8	–	ns
Output falling time (T_f)	–	1.0	–	ns
Performance				
Conversion rate	125	–	–	MHz
Int. non-linearity	–	± 0.3	± 0.5	LSB
Diff. non-linearity	–	± 0.3	± 0.5	LSB
Diff. gain error	–	1.0	–	%
Diff. phase error	–	0.5	–	deg.
Aperture jitter (T_j)	–	10	–	ps
Sampling delay (T_{sd})	–	1.5	–	ns
Output delay (T_d)	3.0	3.6	4.2	ns
Clock pulse width T_{PW1}	4	–	–	ns
T_{PW0}	4	–	–	ns
Dynamic characteristics (for Conv. Rate of 125 MSPS)				
Full scale Input Bandwidth V_{IN}=2Vp-p Bandwidth	200	–	–	MHz
S/N ratio Input=1MHz, FS	–	48	–	dB
Input=31.249MHz, FS	–	40	–	dB
Error rate Input=31.249MHz, FS (Error=16LSB min.)	–	–	10^{-9}	

Technical Notes

1. Even with the input capacitance down to 17pF, or less, the converter still requires an input amplifier with good drive capability. The amplifier will require wide band width and high slew rate (250V/µS typical) to take full advantage of the input band width of the converter.
2. The input impedance of the A/D's are capacitive which may result in the input amplifier becoming unstable and cause oscillations. A resistor with a value between 2 and 10 Ohms between the amplifier and the input to the converter will stop any oscillations.
3. Clock and $\overline{\text{Clock}}$ (ECL) are usually differentially supplied.
4. The polarity of the output data is controlled by inputs MINV which controls the MSB alone and LINV which controls Bit 2 to Bit 8 (LSB). The combination of '0' s and '1' on these inputs offer the user various code options. Detailed coding shown on page 4. Logic level '0' is obtained by leaving inputs open, logic level '1' is obtained by connecting a 3.9K Ohm resistor to GND.
5. The digital outputs Bits 1 to 8 require pull down resistors, 220 Ohms, connected to the negative supply rail.
6. The reference voltage range (-2.0V to 0V typical) determines the dynamic range of the input voltage. Adjustments to this range can be made within the range V_B = -2 ± 0.2V and V_T = 0V ± 0.1V. The reference input V_B should be decoupled to GND using 1µF and 0.01µF capacitors. Improvement in the high frequency stability can be achieved by decoupling terminal V_M using a 0.01µF.
7. Terminal V_M is used when a more accurate linearity than that specified is required. The external circuit to achieve this is shown on page 3.
8. All pins not being used should be grounded.
9. Substantial analog and digital ground planes must be provided. It is recommended that these ground planes are taken to a common point, the power ground line, as close to the ADC as possible.

Table 2: Description (cont'd)

Power Supply Requirements	Min.	Typ.	Max.	Units
Supply Voltage AV_S, DV_S	-5.5	-5.2	-4.95	V
Supply Current	-230	-160	–	mA
Power Dissipation	–	870	–	mW
DGND - AGND	–50	–	+50	mV
AV_S - DV_S	–50	–	+50	mV
Physical / Environmental				
Operating temperature ADC-307-1 (Ambient)	-25	–	+100	°C
Operating temperature ADC-307-4 (Case)	-25	–	+125	°C
Storage temperature	-65	–	+150	°C

Table 3: Absolute Maximum Ratings (Ta = 25°C)

Supply Voltage V_S	+0.5 to -7	V
Input Voltage V_{IN}	+0.5 to -2.7	V
Reference Voltage V_T, V_B, V_M	+0.5 to -2.7	V
Reference Voltage $\lvert V_T - V_B \rvert$	2.5	V
Digital Inputs	+0.5 to -4	V
$\lvert$ Clock - $\overline{\text{Clock}}$ $\rvert$	2.7	V
V_M Input Current	-3 to +3	mA
Digital Output Current	0 to -30	mA

Application Circuit (Example)

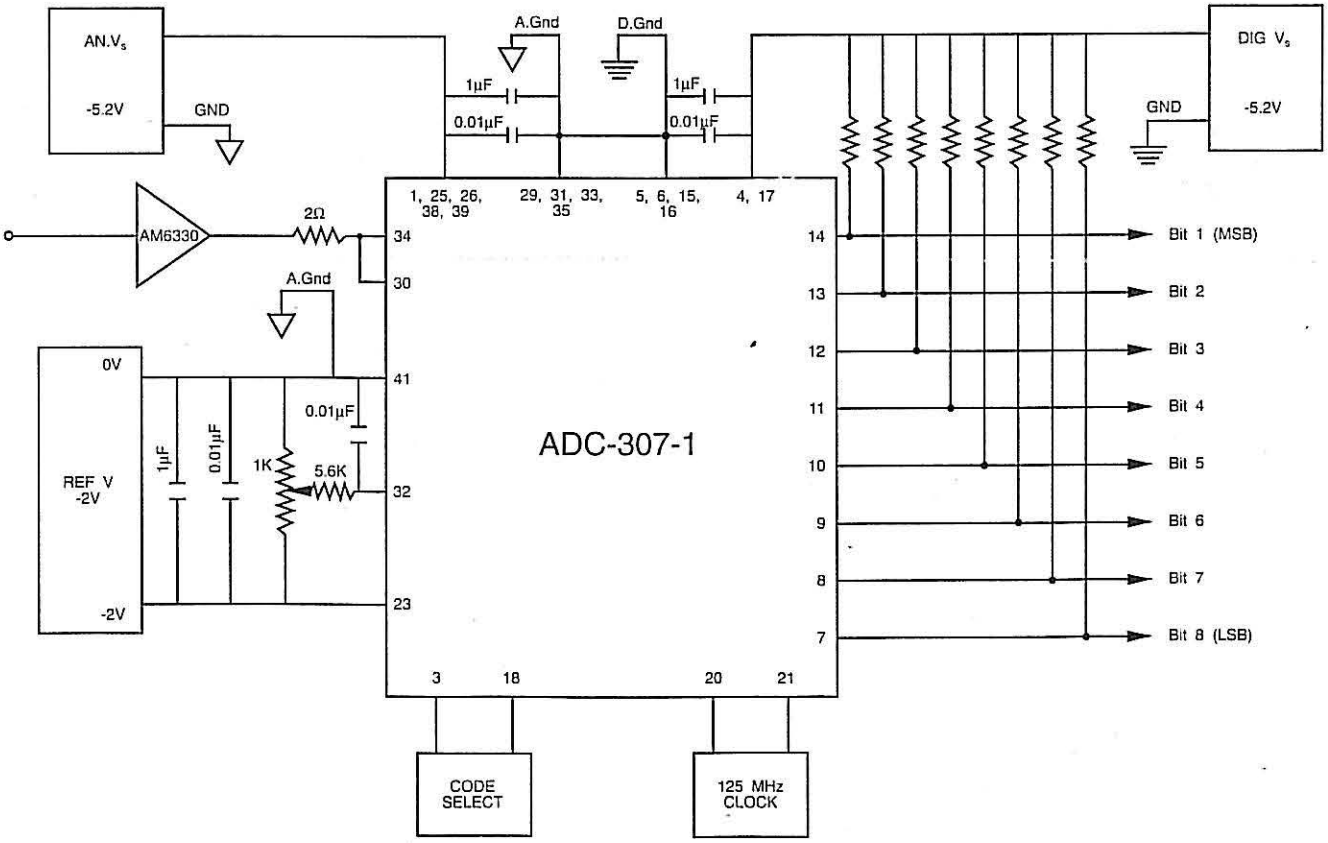

TECHNICAL NOTES (cont'd)

10. The power supplies to analog and digital inputs (-5.2V) should be supplied from separate, isolated power supplies. If one of the power supplies fails or is shorted to ground for more than 1 second there is a possibility the device may be destroyed. Both -5.2V lines should be decoupled using 1µF and 0.01µF capacitors located as close to the pins as possible.

Table 4: Digital Output

This table and the chart below indicate the compatibility between the analog input and the digital output code.

VIN	Step	MINV 1 LINV 1	0 1	1 0	0 0
		D7.....D0	D7.....D0	D7.....D0	D7.....D0
		000.....00	100.....00	011.....11	111.....11
0V	0	000.....00	100.....00	011.....11	111.....11
	1	000.....01	100.....01	011.....10	111.....10
		:	:	:	:
		:	:	:	:
-1V	127	011.....11	111.....11	000.....00	100.....00
	128	100.....00	000.....00	111.....11	011.....11
		:	:	:	:
		:	:	:	:
	254	111.....10	011.....10	100.....01	000.....01
	255	111.....11	011.....11	100.....00	000.....00
-2V		111.....11	011.....11	100.....00	000.....00

Timing Chart

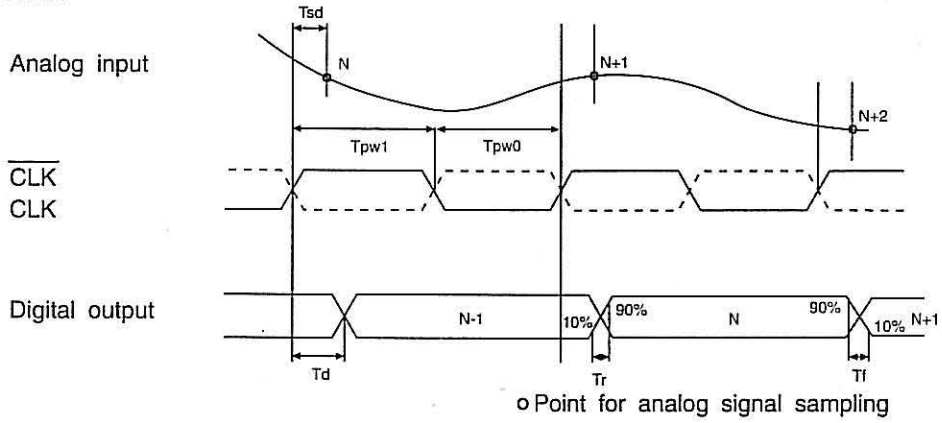

Mechanical Dimension ADC-307-4

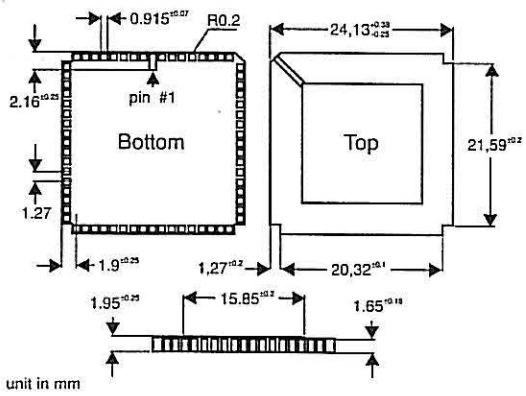

Mechanical Dimension ADC-307-1