CEL

NEC's L, S-BAND SPDT SWITCH

UPG168TB

FEATURES

- **SWITCH CONTROL VOLTAGE:**
  V_{cont} (H) = 2.5 to 5.3 V (3.0 V TYP.)
  V_{cont} (L) = –0.2 to +0.2 V (0 V TYP.)

- **LOW INSERTION LOSS:**
  L_{INS1} = 0.30 dB TYP. @ f = 0.5 to 1.0 GHz, V_{cont} = 3.0 V/0 V
  L_{INS2} = 0.40 dB TYP. @ f = 2.0 GHz, V_{cont} = 3.0 V/0V
  L_{INS3} = 0.90 dB MAX. @ f = 2.0 to 2.5 GHz, V_{cont} = 3.0 V/0 V

- **HIGH ISOLATION:**
  ISL1 = 27 dB TYP. @ f = 0.5 to 2.0 GHz, V_{cont} = 3.0 V/0 V
  ISL2 = 18 dB MIN. @ f = 2.0 to 2.5 GHz, V_{cont} = 3.0 V/0 V

- **MIDDLE POWER:**
  P_{in} (1 dB) = +26.5 dBm TYP. @ f = 1.0 GHz, V_{cont} = 3.0 V/0 V

- **HIGH-DENSITY SURFACE MOUNTING:**
  6-pin super minimold package (2.0 × 1.25 × 0.9 mm)

DESCRIPTION

NEC's UPG168TB is GaAs MMIC for L, S-band SPDT (Single Pole Double Throw) switch which were developed for mobile phone and another L, S-band application.

This device can operate frequency from 0.5 to 2.5 GHz, having the low insertion loss and high isolation.

This device is housed in a 6-pin super minimold package. And this package is able to high-density surface mounting.

APPLICATION

- **L-band digital cellular or cordless telephone**
- **PCS, W-LAN, WLL and Bluetooth™ etc.**

ORDERING INFORMATION

PART NUMBER	PACKAGE	MARKING	SUPPLYING FORM
UPG168TB-E4	6-pin super minimold	G2T	• Embossed tape 8 mm wide • Pin 4, 5, 6 face the perforation side of the tape • Qty 3 kpcs/reel

Remark To order evaluation samples, contact your nearby sales office.
Part number for sample order: UPG168TB

Caution **Observe precautions when handling because these devices are sensitive to electrostatic discharge.**

PIN CONNECTIONS AND INTERNAL BLOCK DIAGRAM

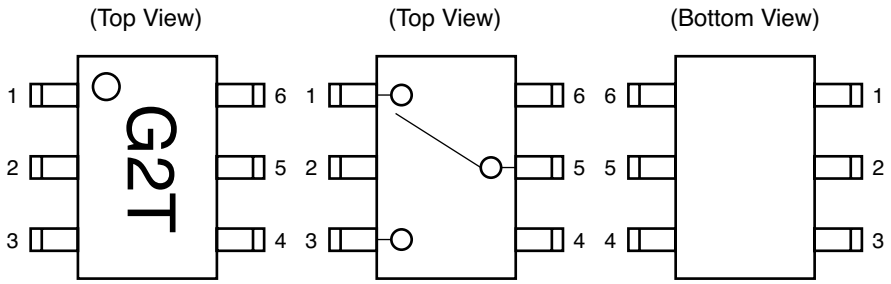

PIN NO.	PIN NAME
1	OUTPUT2
2	GND
3	OUTPUT1
4	V_{cont1}
5	INPUT
6	V_{cont2}

TRUTH TABLE

V_{cont1}	V_{cont2}	INPUT-OUTPUT1	INPUT-OUTPUT2
Low	High	ON	OFF
High	Low	OFF	ON

ABSOLUTE MAXIMUM RATINGS (T_A =+25°C, unless otherwise specified)

PARAMETER	SYMBOL	RATINGS	UNIT
Switch Control Voltage	V_{cont}	–6.0 to +6.0 Note 1	V
Input Power	P_{in}	+28	dBm
Power Dissipation	P_D	150 Note 2	mW
Operating Ambient Temperature	T_A	–45 to +85	°C
Storage Temperature	T_{stg}	–55 to +150	°C

Notes 1. Mounted on double-sided copper-clad 50 × 50 × 1.6 mm epoxy glass PWB, T_A = +85°C

2. $|V_{cont1} - V_{cont2}| \leq 6.0$ V

RECOMMENDED OPERATING RANGE (T_A =+25°C, unless otherwise specified)

PARAMETER	SYMBOL	MIN.	TYP.	MAX.	UNIT
Switch Control Voltage (H)	$V_{cont\ (H)}$	2.5	3.0	5.3	V
Switch Control Voltage (L)	$V_{cont\ (L)}$	–0.2	0	0.2	V

ELECTRICAL CHARACTERISTICS (T_A = +25°C, V_{cont} = 3.0 V/0 V, DC blocking capacitors = 51 pF, unless otherwise specified)

PARAMETER	SYMBOL	TEST CONDITIONS	MIN.	TYP.	MAX.	UNIT
Insertion Loss 1	L_{INS1}	f = 0.5 to 1.0 GHz	–	0.30	0.55	dB
Insertion Loss 2	L_{INS2}	f = 2.0 GHz	–	0.40	0.65	dB
Insertion Loss 3	L_{INS3}	f = 2.0 to 2.5 GHz	–	–	0.90	dB
Isolation 1	ISL1	f = 0.5 to 2.0 GHz	22	27	–	dB
Isolation 2	ISL2	f = 2.0 to 2.5 GHz	18	–	–	dB
Input Return Loss 1	RL_{in1}	f = 0.5 to 2.0 GHz	13	19	–	dB
Input Return Loss 2	RL_{in2}	f = 2.0 to 2.5 GHz	11	–	–	dB
Output Return Loss 1	RL_{out1}	f = 0.5 to 2.0 GHz	13	19	–	dB
Output Return Loss 2	RL_{out2}	f = 2.0 to 2.5 GHz	11	–	–	dB
1 dB Gain Compression Input Power Note	$P_{in\ (1\ dB)}$	f = 1.0 GHz	+22.0	+26.5	–	dBm
Switch Control Speed	t_{SW}		–	50	200	ns
Switch Control Current	I_{cont}		–	0.5	10	μA

Note $P_{in\ (1\ dB)}$ is measured the input power level when the insertion loss increases more 1 dB than that of linear range.

STANDARD CHARACTERISTICS FOR REFERENCE

(T_A = +25°C, V_{cont} = 3.0 V/0 V, DC cut capacitors = 51 pF, unless otherwise specified)

PARAMETER	SYMBOL	TEST CONDITIONS	MIN.	TYP.	MAX.	UNIT
0.1 dB Gain Compression Input Power Note	$P_{in\ (0.1\ dB)}$	f = 1.0 GHz	–	+23.0	–	dBm

Note $P_{in\ (0.1\ dB)}$ is measured the input power level when the insertion loss increases more 0.1 dB than that of linear range.

Caution This device is used it is necessary to use DC cut capacitors.
The value of DC blocking capacitors should be chosen to accommodate the frequency of operation, bandwidth, switching speed and the condition with actual board of your system. The range of recommended DC cut capacitor value is less than 100 pF.

EVALUATION CIRCUIT (V_{cont} = 3.0 V/0 V, DC blocking capacitors = 51 pF)

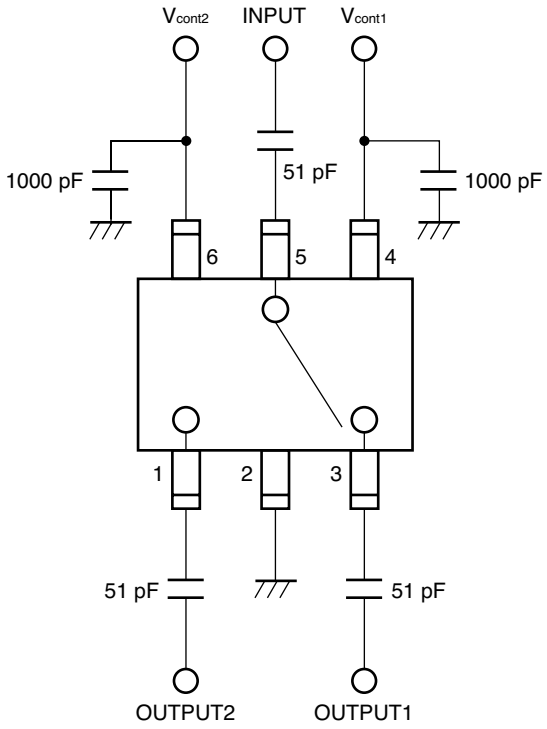

This application circuit and its parameters are for reference only.

ILLUSTRATION OF THE TEST CIRCUIT ASSEMBLED ON EVALUATION BOARD

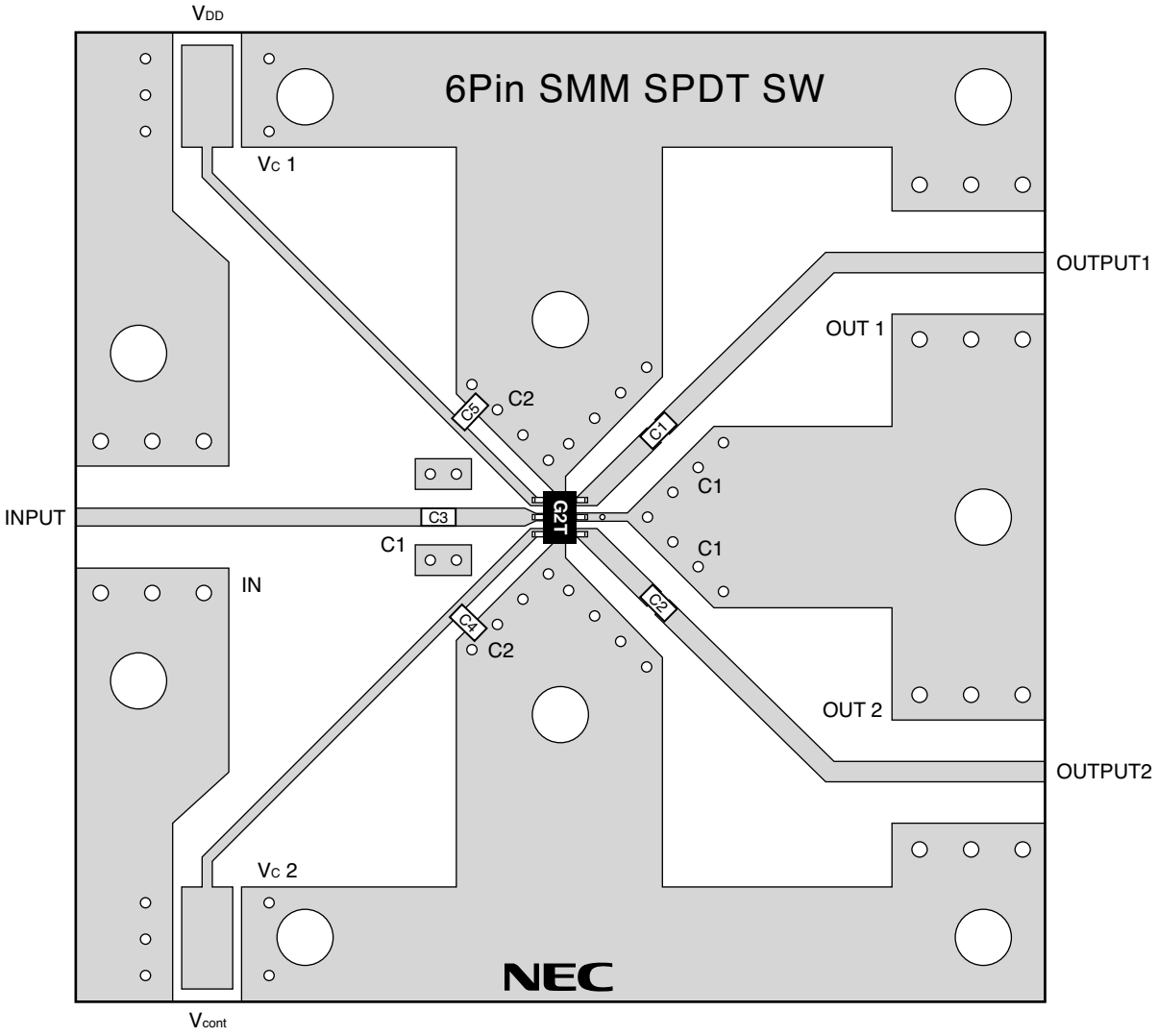

USING THE NEC EVALUATION BOARD

SYMBOL	VALUES
C1, C2, C3	51 pF
C4, C5	1000 pF

PACKAGE DIMENSIONS

6-PIN SUPER MINIMOLD (UNIT:mm)

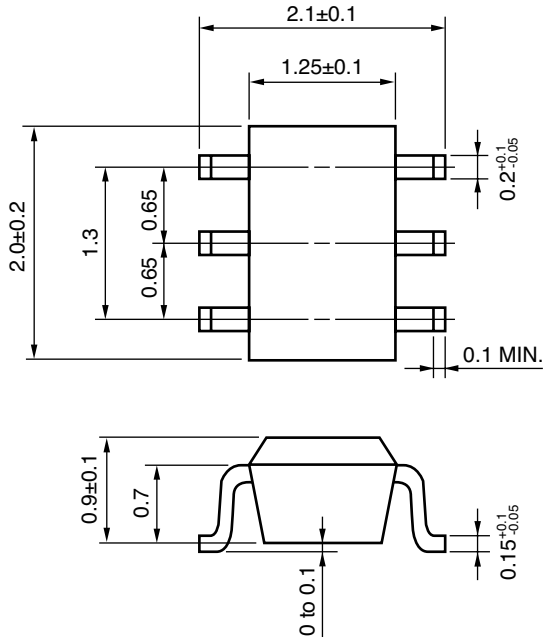

RECOMMENDED SOLDERING CONDITIONS

This product should be soldered and mounted under the following recommended conditions. For soldering methods and conditions other than those recommended below, contact your nearby sales office.

Soldering Method	Soldering Conditions		Condition Symbol
Infrared Reflow	Peak temperature (package surface temperature)	: 260°C or below	IR260
	Time at peak temperature	: 10 seconds or less	
	Time at temperature of 220°C or higher	: 60 seconds or less	
	Preheating time at 120 to 180°C	: 120±30 seconds	
	Maximum number of reflow processes	: 3 times	
	Maximum chlorine content of rosin flux (% mass)	: 0.2%(Wt.) or below	
VPS	Peak temperature (package surface temperature)	: 215°C or below	VP215
	Time at temperature of 200°C or higher	: 25 to 40 seconds	
	Preheating time at 120 to 150°C	: 30 to 60 seconds	
	Maximum number of reflow processes	: 3 times	
	Maximum chlorine content of rosin flux (% mass)	: 0.2%(Wt.) or below	
Wave Soldering	Peak temperature (molten solder temperature)	: 260°C or below	WS260
	Time at peak temperature	: 10 seconds or less	
	Preheating temperature (package surface temperature)	: 120°C or below	
	Maximum number of flow processes	: 1 time	
	Maximum chlorine content of rosin flux (% mass)	: 0.2%(Wt.) or below	
Partial Heating	Peak temperature (pin temperature)	: 350°C or below	HS350
	Soldering time (per side of device)	: 3 seconds or less	
	Maximum chlorine content of rosin flux (% mass)	: 0.2%(Wt.) or below	

Caution **Do not use different soldering methods together (except for partial heating).**

CEL **California Eastern Laboratories,** Your source for NEC RF, Microwave, Optoelectronic, and Fiber Optic Semiconductor Devices.
4590 Patrick Henry Drive • Santa Clara, CA 95054-1817 • (408) 988-3500 • FAX (408) 988-0279 • **www.cel.com**