Safety Relay Unit (Sensor Connector Type)

G9SA-300-SC

CSM_G9SA-300-SC_DS_E_2_1

Less Wiring Required with Safety Light Curtain

- Sensor connector allows direct connection to OMRON F3SN-A/F3SN-B/F3SH-A Safety Light Curtains with PNP outputs.
- Reduces wiring and prevents incorrect connection.
- Connection to emergency stop switch also supported.
- Conforms to EN standards (TÜV approval).
- DIN track mounting possible.

⚠ Be sure to read the *"Safety Precautions"* on page 8.

Model Number Structure

Model Number Legend

G9SA-□□□□□□-□□
1 2 3 4 5 6

1. **Function**
   None: Emergency stop
2. **Contact Configuration (Safety Output)**
   3: 3PST-NO
3. **Contact Configuration (OFF-delay Output)**
   0: None
4. **Contact Configuration (Auxiliary Output)**
   0: None
5. **Input Configuration**
   None: 1-channel or 2-channel input possible
6. **Terminal**
   SC: Connector terminals

Ordering Information

Safety Relay Unit

Emergency-stop Unit with Sensor Connector

Main contact	Auxiliary contact	Number of input channels	Rated voltage	Model
3PST-NO	None	2 channels	24 VDC	**G9SA-300-SC**

Note: 1. Connect to the sensor connector using a special OMRON F3SN-A/F3SN-B/F3SH-A Safety Light Curtain Connecting Cable. For details, refer to the information on accessories below.
2. The Safety Light Curtain and Connecting Cable are sold separately.

Accessories (Order Separately)

Connecting Cables (for F3SN-A/F3SN-B/F3SH-A)

Appearance	Cable length	Model
	0.2 m	**F39-JCR2C**
	1 m	**F39-JC1C**
	3 m	**F39-JC3C**
	7 m	**F39-JC7C**
	10 m	**F39-JC10C**
	15 m	**F39-JC15C**

Note: The model numbers given in the table are for sets of two Cables, one for the emitter and one for the receiver.

Specifications

Ratings

Power Input

Item / Model	G9SA-300-SC
Power supply voltage	24 VDC
Operating voltage range	85% to 110% of rated power supply voltage
Power consumption	24 VDC: 0.7 W max.

Contacts

Model / Item / Load	G9SA-300-SC Resistive load
Rated load	250 VAC, 5 A 30 VDC, 5 A
Rated carry current	5 A

Inputs

Item / Model	G9SA-300-SC
Input current	40 mA max.

Characteristics

Item / Model		G9SA-300-SC
Contact resistance ✻1		100 mΩ
Operating time ✻2		300 ms max.
Response time ✻3		10 ms max.
Insulation resistance ✻4		100 MΩ min. (at 500 VDC)
Dielectric strength	Between different outputs	2,500 VAC, 50/60 Hz for 1 min
	Between inputs and outputs	
	Between power inputs and outputs	
Vibration resistance		10 to 55 to 10 Hz, 0.375-mm single amplitude (0.75-mm double amplitude)
Shock resistance	Destruction	300 m/s^2
	Malfunction	100 m/s^2
Durability	Mechanical	5,000,000 operations min. (at approx. 7,200 operations/h)
	Electrical	100,000 operations min. (at approx. 1,800 operations/h, rated load)
Failure rate (P level) (reference value)		5 VDC, 1 mA
Ambient operating temperature		–25 to 55°C (with no icing or condensation)
Ambient operating humidity		35% to 85%
Terminal tightening torque		0.98 N·m
Weight		Approx. 300 g

✻1. The contact resistance was measured with 1 A at 5 VDC using the voltage-drop method.
✻2. Not including bounce time.
✻3. The response time is the time it takes for the main contact to turn OFF after the input is turned OFF. Includes bounce time.
✻4. The insulation resistance was measured with 500 VDC at the same places that the dielectric strength was checked.

Connections

Internal Connections

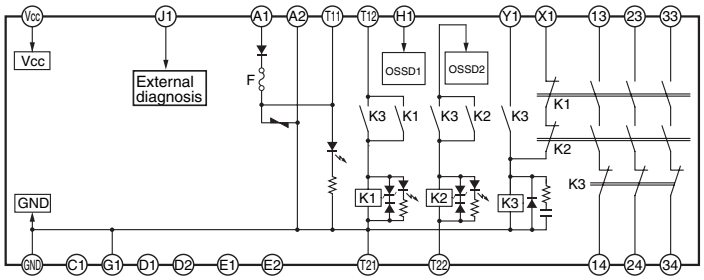

Note: Do not connect anything to terminals C1, D1, D2, E1, and E2.

Terminal Arrangement

Emitter Connector
F3SN-A□□□□P□□-L,
F3SN-B□□□□P□□-L,
F3SH-A□□□□P□□-L

Receiver Connector
F3SN-A□□□□P□□-D,
F3SN-B□□□□P□□-D,
F3SH-A□□□□P□□-D

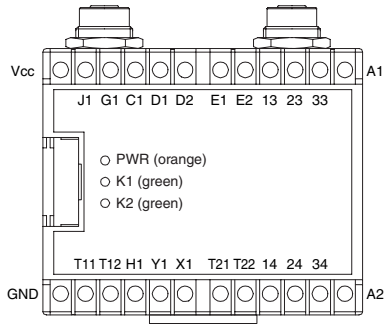

The pin arrangement at the Sensor is shown below.

Connector (Sensor End)

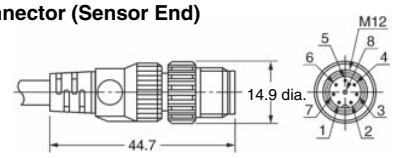

Pin number	Signal name	
	Receiver	Emitter
1	Control output 2 (OSSD2)	Interlock selection input (INTERLOCK)
2	+24V (24 VDC)	+24V (24 VDC)
3	Control output 1 (OSSD1)	Test input (TEST)
4	Auxiliary output (AUXILIARY)	Reset input (RESET)
5	RS-485 (A)	RS-485 (A)
6	RS-485 (B)	RS-485 (B)
7	0V	0V
8	External relay monitor input (EDM)	N.C.

Dimensions

(Unit: mm)

G9SA-300-SC

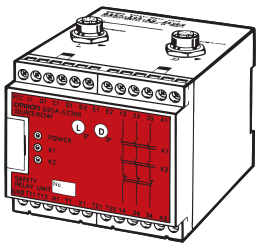

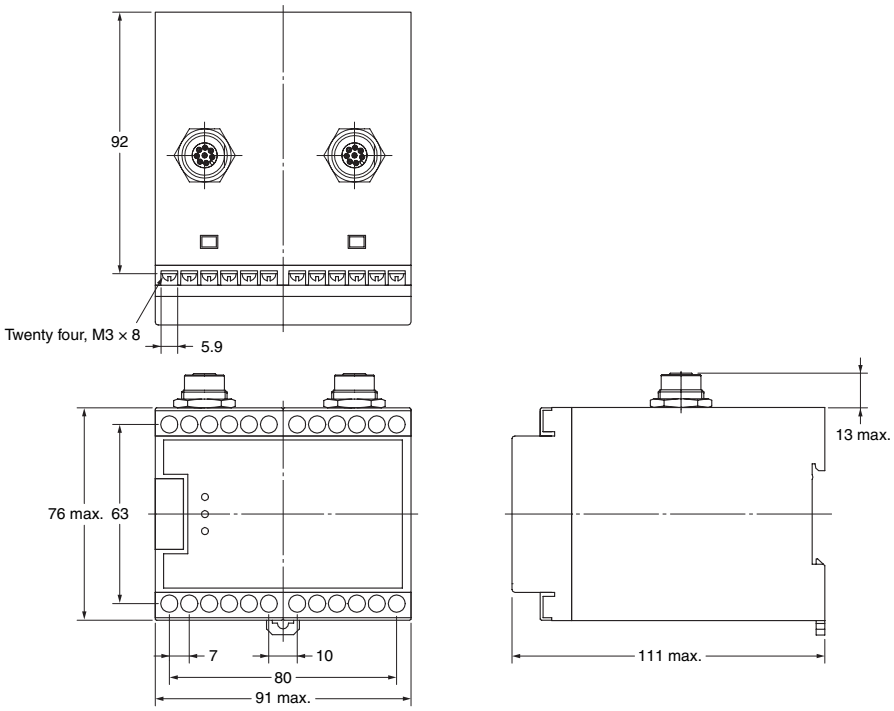

Application Examples

Connection to Safety Light Curtain Only (Auto-reset)

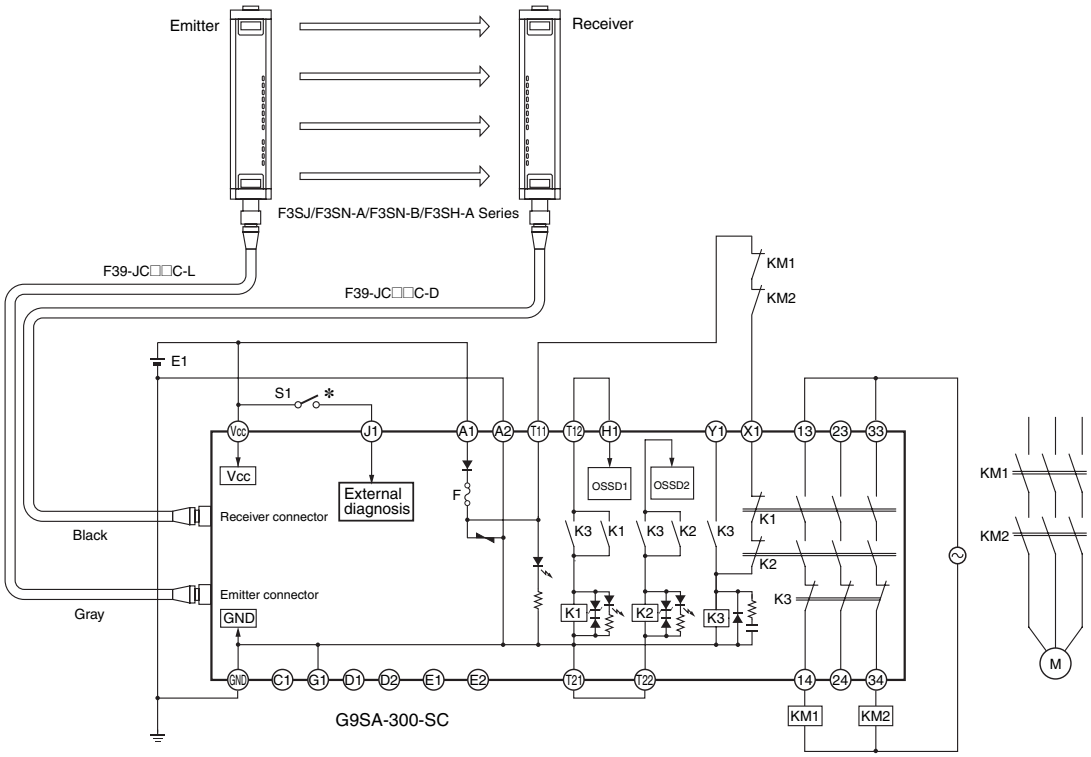

S1: External test switch
KM1 and KM2: Magnetic Contactors
M: 3-phase motor
E1: 24-VDC Power Supply (S82K)

Note: 1. The Safety Light Curtain EDM function and auxiliary outputs cannot be used.
2. Do not connect anything to terminals C1, D1, D2, E1, and E2.

✻ The Unit performs normal operation when S1 is open and external diagnosis when it is closed.

Timing Chart

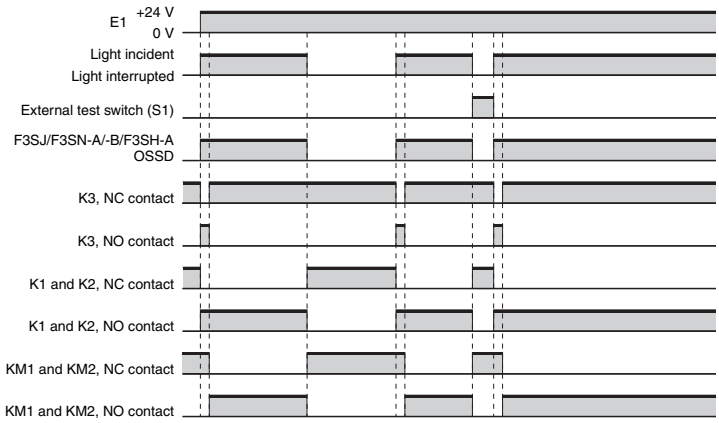

Connection to Safety Light Curtain Only (Manual Reset)

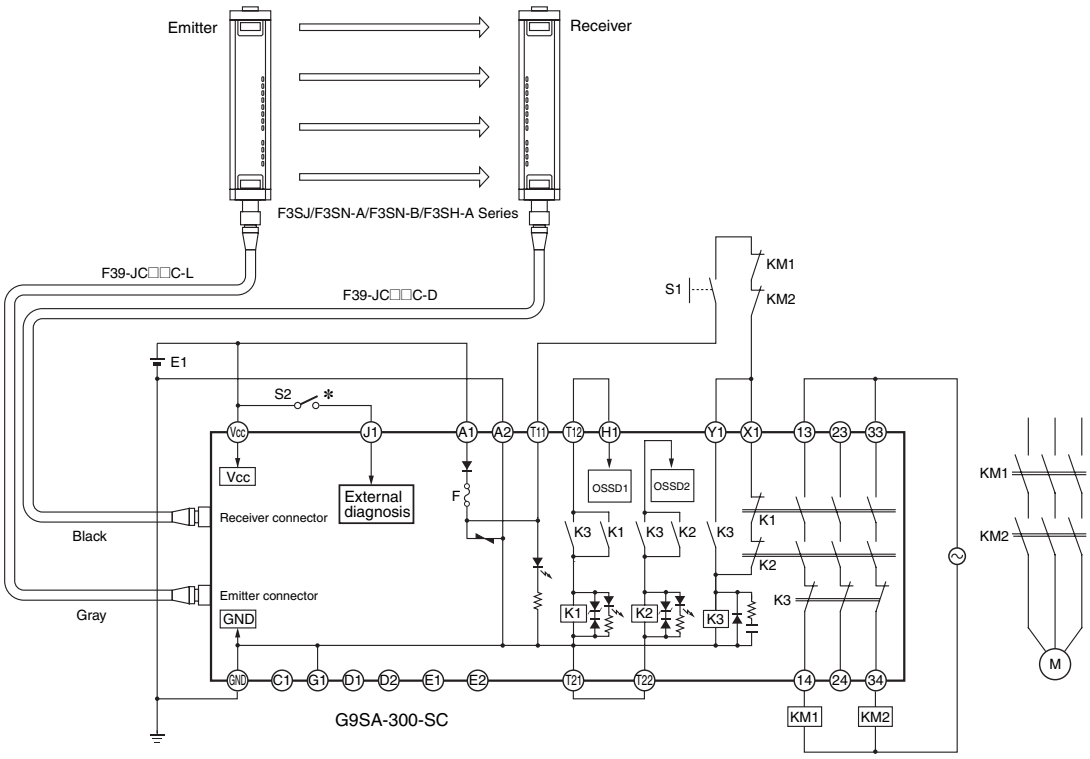

S1: Reset switch (momentary action switch)
S2: External test switch
KM1 and KM2: Magnetic Contactors
M: 3-phase motor
E1: 24-VDC Power Supply (S82K)

Note: 1. The Safety Light Curtain EDM function and auxiliary outputs cannot be used.

2. Do not connect anything to terminals C1, D1, D2, E1, and E2.

✻ The Unit performs normal operation when S2 is open and external diagnosis when it is closed.

Timing Chart

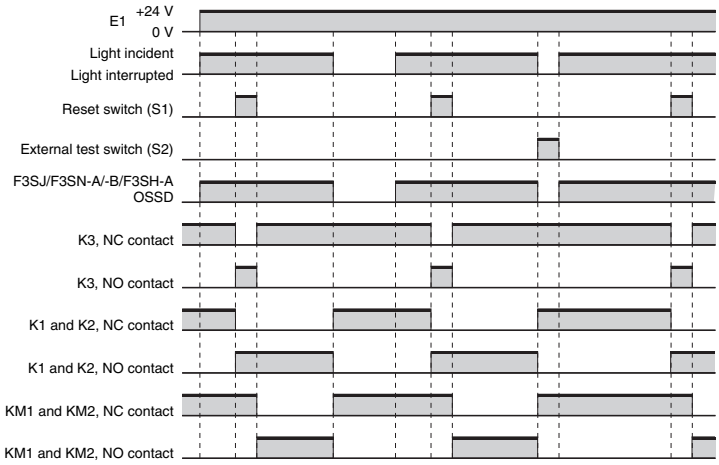

Connection to Safety Light Curtain and Two Channels of Limit Switch Input (Auto-reset)

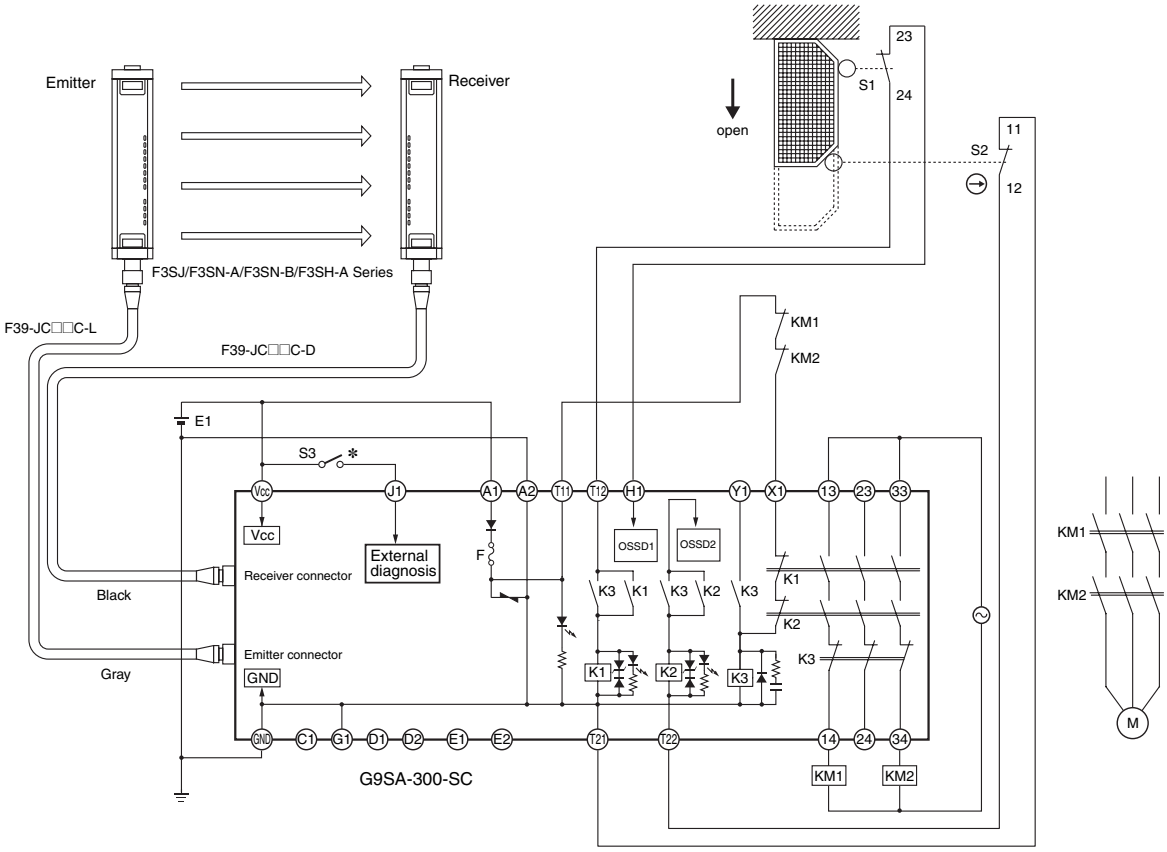

S1: Limit switch (NO)
S2: Safety Limit Switch with direct opening mechanism (NC) (D4B-N, D4N, D4F) ⊖
S3: External test switch
KM1 and KM2: Magnetic Contactors
M: 3-phase motor
E1: 24-VDC Power Supply (S82K)

Note: 1. The Safety Light Curtain EDM function and auxiliary outputs cannot be used.
2. Do not connect anything to terminals C1, D1, D2, E1, and E2.

✻ The Unit performs normal operation when S3 is open and external diagnosis when it is closed.

Timing Chart

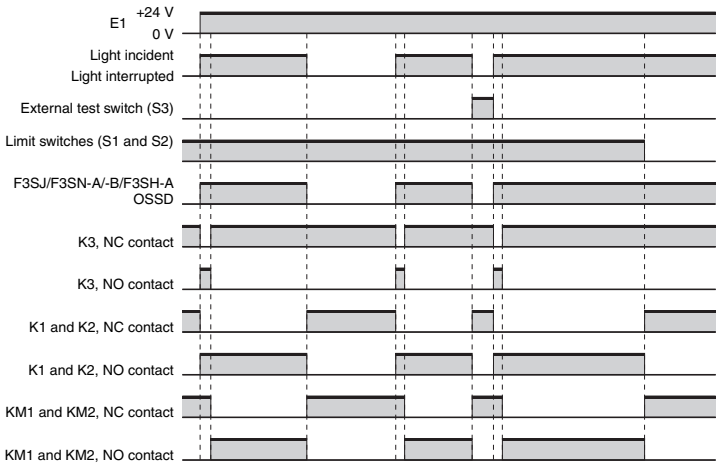

Connection to Safety Light Curtain and Two Channels of Emergency Stop Switch Input (Manual Reset)

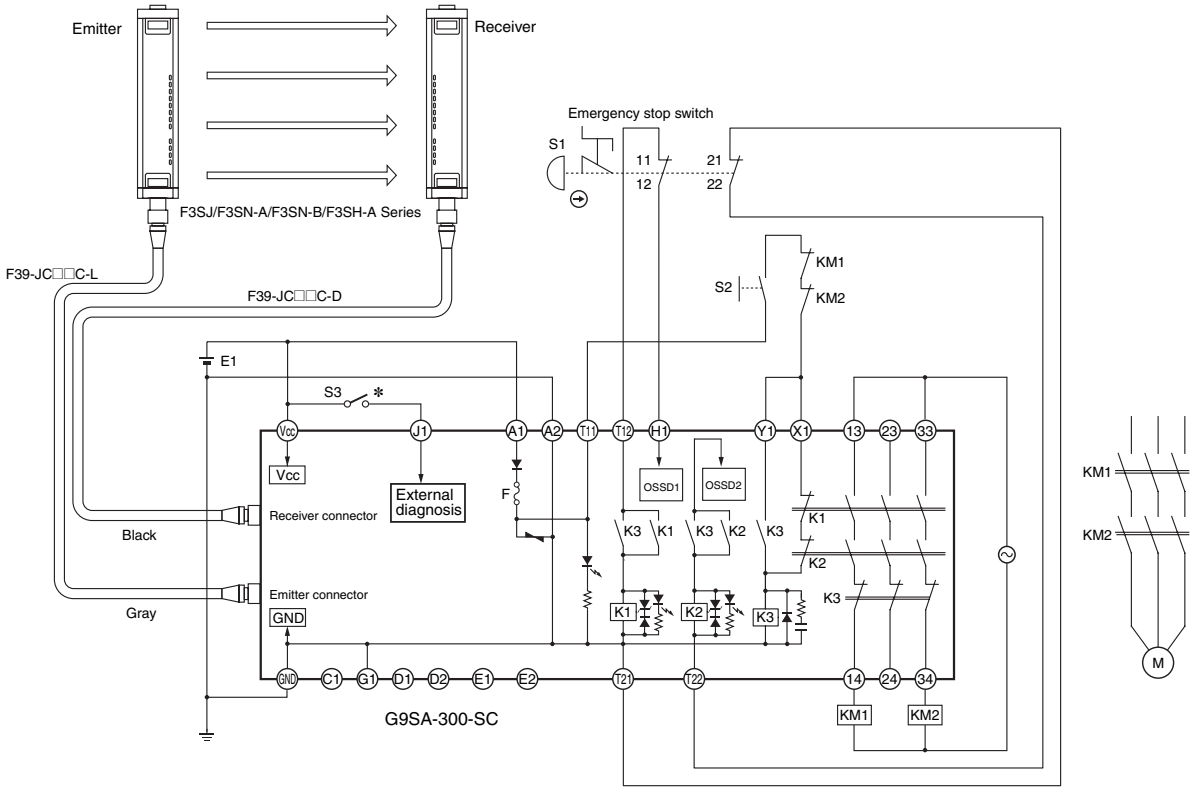

S1: Emergency stop switch ⊕
S2: Reset switch (momentary action switch)
S3: External test switch
KM1 and KM2: Magnetic Contactors
M: 3-phase motor
E1: 24-VDC Power Supply (S82K)

Timing Chart

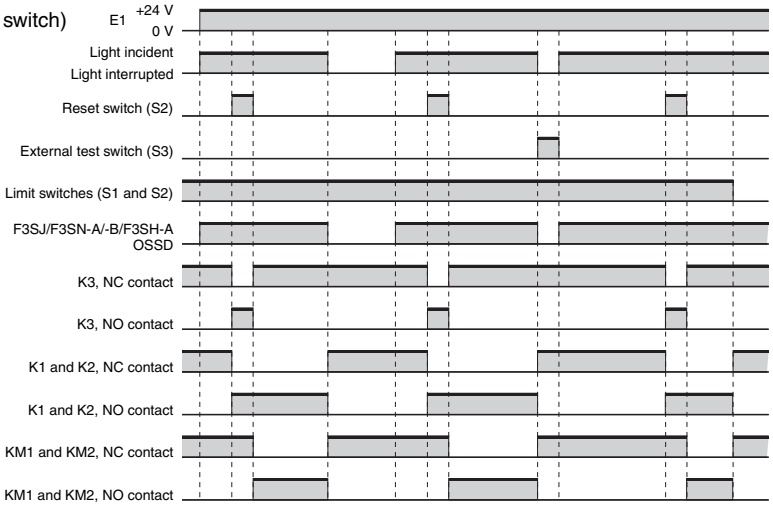

Note: 1. The Safety Light Curtain EDM function and auxiliary outputs cannot be used.
2. Do not connect anything to terminals C1, D1, D2, E1, and E2.

✻ The Unit performs normal operation when S3 is open and external diagnosis when it is closed.

Safety Precautions

Refer to the *"Precautions for All Relays"* and *"Precautions for All Relays with Forcibly Guided Contacts"*.

Precautions for Safe Use

- Turn OFF the G9SA-300-SC before wiring the G9SA-300-SC. Do not touch the terminals of the G9SA-300-SC while the power is turned ON, because the terminals are charged and may cause an electric shock.
- To conform to IEC61496-1 and UL508 when using the F3SN-A, F3SN-B, or F3SH-A, ensure that the DC power supply satisfies all the conditions below.
  - The voltage is within the rated power supply voltage range (24 VDC ±10%).
  - The power supply is connected only to the F3SN-A or devices with a direct bearing on the F3SN-A's electrical detection protective function, such as Safety Controllers or Muting Sensors. Do not connect it to any other devices or equipment. When connecting more than one device, ensure that the capacity is easily sufficient for the total rated current.
  - The power supply conforms to the EMC Directive (industrial environment).
  - The power supply uses double or reinforced insulation between the primary and secondary circuits.
  - The power supply automatically resets overcurrent protection characteristics (voltage drop).
  - The power supply maintains an output holding time of at least 20 ms.
  - The power supply satisfies the output characteristic requirements of limited voltage/current circuits and Class 2 circuits as defined by UL508.
  - The power supply satisfies laws, regulations, and standards concerning EMC and the safety of electrical devices for the country or region in which it is used. (In the EU, for example, the power supply must conform to the EMC Directive and Low Voltage Directive.)
- Recommended Power Supplies: S82K, S82J, S82F, or S82F-P made by OMRON. For details, refer to the *Power Supply Selection Guide* (Cat. No. Y102).
- Do not connect any device other than the F3SN-A, F3SN-B, or F3SH-A with PNP outputs.
- Be sure to mount both the emitter and the receiver in the correct position. (The Sensor will not operate it they are mounting in reverse.)
- For further details on using the F3SN-A, F3SN-B, or F3SH-A, refer to F3SN-A/F3SN-B, or F3SH-A.

Precautions for Correct Use

Failure Detection for Slow-starting Power Supply

When using a power supply with a long start-up time, if power is switched on while input has been closed the internal circuits will detect a power voltage error and the product will not operate. Apply the voltage to the product once the voltage has reached its rated level.

Installation

The G9SA-300-SC can be installed in any direction.

Wiring

- Use the following to wire the Unit.
  Stranded wire: 0.75 to 1.5 mm^2
  Solid wire: 1.0 to 1.5 mm^2
- Tighten each screw to a torque of 0.78 to 1.18 N·m, or the Unit may malfunction or generate heat.
- External inputs connected to H1 and T12 or T21 and T22 of the Unit must be no-voltage contact inputs.
- GND is a ground terminal. When a machine is grounded at the positive, the GND terminal cannot be grounded.

Connecting Inputs

When using more than one G9SA300-SC Unit, do not connect the same switch to more than one G9SA300-SC Unit. This applies to all input terminals.

Incorrect

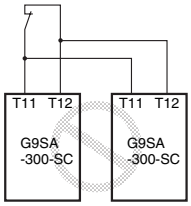

Durability of Contact Outputs

Relay with Forcibly Guided Contact durability depends greatly on the switching condition. Confirm the actual conditions of operation in which the Relay will be used in order to make sure the permissible number of switching operations.
When the accumulated number of operation exceeds its permissible range, it can cause failure of reset of safety control circuit. In such case, please replace the Relay immediately. If the Relay is used continuously without replacing, then it can lead to loss of safety function.

Applicable Safety Category (EN954-1)

G9SA-300-SC Safety Relay Units fall under Safety Category 4.
The above is provided according to circuit examples presented by OMRON. Therefore, the above may not apply to all operating environments.
The applicable safety category is determined from the whole safety control system. Make sure that the whole safety control system meets EN954-1 requirements.

Certified Standards

The G9SA-300-SC conforms to the following standards.

- EN standards, certified by TÜV Rheinland
  EN954-1
  EN60204-1
- Conformance to EMC (Electromagnetic Compatibility), certified by TÜV Rheinland:
  EMI (Emission): EN55011 Group 1 Class A
  EMS (Immunity): EN61000-6-2
- UL standards: UL508 (Industrial Control Equipment)
- CSA standards: CSA C22.2 No. 14 (Industrial Control Equipment)

Read and Understand This Catalog

Please read and understand this catalog before purchasing the products. Please consult your OMRON representative if you have any questions or comments.

Warranty and Limitations of Liability

WARRANTY

OMRON's exclusive warranty is that the products are free from defects in materials and workmanship for a period of one year (or other period if specified) from date of sale by OMRON.

OMRON MAKES NO WARRANTY OR REPRESENTATION, EXPRESS OR IMPLIED, REGARDING NON-INFRINGEMENT, MERCHANTABILITY, OR FITNESS FOR PARTICULAR PURPOSE OF THE PRODUCTS. ANY BUYER OR USER ACKNOWLEDGES THAT THE BUYER OR USER ALONE HAS DETERMINED THAT THE PRODUCTS WILL SUITABLY MEET THE REQUIREMENTS OF THEIR INTENDED USE. OMRON DISCLAIMS ALL OTHER WARRANTIES, EXPRESS OR IMPLIED.

LIMITATIONS OF LIABILITY

OMRON SHALL NOT BE RESPONSIBLE FOR SPECIAL, INDIRECT, OR CONSEQUENTIAL DAMAGES, LOSS OF PROFITS OR COMMERCIAL LOSS IN ANY WAY CONNECTED WITH THE PRODUCTS, WHETHER SUCH CLAIM IS BASED ON CONTRACT, WARRANTY, NEGLIGENCE, OR STRICT LIABILITY.

In no event shall the responsibility of OMRON for any act exceed the individual price of the product on which liability is asserted.

IN NO EVENT SHALL OMRON BE RESPONSIBLE FOR WARRANTY, REPAIR, OR OTHER CLAIMS REGARDING THE PRODUCTS UNLESS OMRON'S ANALYSIS CONFIRMS THAT THE PRODUCTS WERE PROPERLY HANDLED, STORED, INSTALLED, AND MAINTAINED AND NOT SUBJECT TO CONTAMINATION, ABUSE, MISUSE, OR INAPPROPRIATE MODIFICATION OR REPAIR.

Application Considerations

SUITABILITY FOR USE

OMRON shall not be responsible for conformity with any standards, codes, or regulations that apply to the combination of products in the customer's application or use of the products.

At the customer's request, OMRON will provide applicable third party certification documents identifying ratings and limitations of use that apply to the products. This information by itself is not sufficient for a complete determination of the suitability of the products in combination with the end product, machine, system, or other application or use.

The following are some examples of applications for which particular attention must be given. This is not intended to be an exhaustive list of all possible uses of the products, nor is it intended to imply that the uses listed may be suitable for the products:

- Outdoor use, uses involving potential chemical contamination or electrical interference, or conditions or uses not described in this catalog.
- Nuclear energy control systems, combustion systems, railroad systems, aviation systems, medical equipment, amusement machines, vehicles, safety equipment, and installations subject to separate industry or government regulations.
- Systems, machines, and equipment that could present a risk to life or property.

Please know and observe all prohibitions of use applicable to the products.

NEVER USE THE PRODUCTS FOR AN APPLICATION INVOLVING SERIOUS RISK TO LIFE OR PROPERTY WITHOUT ENSURING THAT THE SYSTEM AS A WHOLE HAS BEEN DESIGNED TO ADDRESS THE RISKS, AND THAT THE OMRON PRODUCTS ARE PROPERLY RATED AND INSTALLED FOR THE INTENDED USE WITHIN THE OVERALL EQUIPMENT OR SYSTEM.

PROGRAMMABLE PRODUCTS

OMRON shall not be responsible for the user's programming of a programmable product, or any consequence thereof.

Disclaimers

CHANGE IN SPECIFICATIONS

Product specifications and accessories may be changed at any time based on improvements and other reasons.

It is our practice to change model numbers when published ratings or features are changed, or when significant construction changes are made. However, some specifications of the products may be changed without any notice. When in doubt, special model numbers may be assigned to fix or establish key specifications for your application on your request. Please consult with your OMRON representative at any time to confirm actual specifications of purchased products.

DIMENSIONS AND WEIGHTS

Dimensions and weights are nominal and are not to be used for manufacturing purposes, even when tolerances are shown.

PERFORMANCE DATA

Performance data given in this catalog is provided as a guide for the user in determining suitability and does not constitute a warranty. It may represent the result of OMRON's test conditions, and the users must correlate it to actual application requirements. Actual performance is subject to the OMRON Warranty and Limitations of Liability.

ERRORS AND OMISSIONS

The information in this document has been carefully checked and is believed to be accurate; however, no responsibility is assumed for clerical, typographical, or proofreading errors, or omissions.

2008.12

In the interest of product improvement, specifications are subject to change without notice.

OMRON Corporation
Industrial Automation Company

http://www.ia.omron.com/