1 Overview

1.1 Overview

The R8A66597 is a Universal Serial Bus (USB) Controller equipped with USB Host functions and Peripheral functions applicable for On-The-Go. When selecting the Host Controller function, it has two USB ports available for Hi-Speed, Full-Speed, and Low-Speed transfer compliant with USB Specification Revision 2.0. When selecting the Peripheral Controller function, it has one USB port available for Hi-Speed and Full-Speed transfer compliant with USB Specification Revision 2.0.

This controller has a built-in USB transceiver and is compatible with all the transfer types defined in USB Specification Revision 2.0.

The internal buffer memory is 8.5K, and a maximum ten pipes can be used for transferring data. For Pipe1 to Pipe9, any endpoint address can be assigned matching the peripheral functions for communication or user system. Separate bus or multiplex bus can be selected for the CPU connection. A split bus interface (exclusively for the DMA interface) that is different from the CPU bus interface is provided and is suitable for systems demanding high-performance data transfer.

1.2 Features

1.2.1 Built-in Host Controller and Peripheral Controller compatible with Hi-Speed USB

- Built-in USB Host Controller and Peripheral Controller
- Toggle between USB Host functions and Peripheral functions is possible according to what is written to the register
- Built-in USB transceiver

1.2.2 Low power consumption

- 1.5V core power consumes less power when operating
- With the installed Low Power Sleep Mode functions, less power is consumed when the USB is not in use, which is also applicable for portable devices
- Standby power consumption can be greatly reduced by keeping only the VIF power source ON when not using the USB function.
- Operational with a 3.3V single power supply using the internal 1.5V core power regulator

1.2.3 Space-saving package

- Few external devices and space-saving package
  - ・VBUS signal can be connected directly to the controller input pin
  - ・Built-in D+ pull-up resistor (for Peripheral function)
  - ・Built-in D+ and D- pull-down resistors (for Host function)
  - ・Built-in D+ and D- terminating resistors (for Hi-Speed operations)
  - ・Built-in D+ and D- output resistors (for Full-Speed and Low-Speed operations)

Downloaded from Elcodis.com electronic components distributor

1.2.4 Compatible with all USB transfer types

- Compatible with all USB transfer types, including isochronous transfer
  - ・Control transfer
  - ・Bulk transfer
  - ・Interrupt transfer (not compatible with high-bandwidth)
  - ・Isochronous transfer (not compatible with high-bandwidth)

1.2.5 Bus interface

- 16-bit CPU bus interface
  - ・Compatible with 16-bit separate bus/16-bit multiplex bus
  - ・Compatible with DMA transfer in 8-bit/16-bit access (slave function)
- 8-bit split bus (exclusive for external direct memory access controller (DMAC)) interface
- Built-in two DMA interface channels
- DMA transfer provides 40MB/second high-performance data transfer

1.2.6 Pipe configuration

- Built-in 8.5KB buffer memory for USB communication
- Maximum of ten pipes can be selected (including default control pipe)
- Programmable pipe configuration
- Any endpoint address can be assigned to Pipe1 to Pipe9
- Transfer conditions that can be written for each pipe
  - ・Pipe0: Control transfer, single buffer fixed at 256 bytes
  - ・Pipe1~Pipe2: Bulk transfer/Isochronous transfer, continuous transfer modes.
    programmable buffer size (specifiable up to 2K bytes per side, double buffer also specifiable)
  - ・Pipe3~Pipe5: Bulk transfer, continuous transfer modes,
    programmable buffer size (specifiable up to 2K bytes per side, double buffer also specifiable)
  - ・Pipe6~Pipe9: Interrupt transfer, single buffer fixed at 64 bytes

1.2.7 Features when selecting Host functions

- Compatible with Hi-Speed (480Mbps), Full-Speed (12Mbps) and Low-Speed transfer (1.5Mbps)
- Several Peripheral devices can be connected through one tier hub
- Reset handshake auto response
- SOF and packet transmission schedule automation
- Transfer interval setup function for Isochronous and Interrupt transfer

1.2.8 Features when selecting Peripheral functions

- Compatible with Hi-Speed (480Mbps) and Full-Speed transfer (12Mbps)
- Auto identification of Hi-Speed or Full-Speed operations according to reset handshake auto response
- Control transfer stage management function
- Device state management function
- Auto response function related to SET_ADDRESS request
- NAK response interrupt function (NRDY)
- SOF interpolation function

1.2.9 Functions that Provide On-The-Go Support

- Built-in ID pin and ID pin monitor bit enables determination of A-Device/B-Device at start-up
- Built-in control bit facilitates Host Negotiation Protocol

1.2.10 Other functions

- Compatible with the CPU of big-endian or little-endian according to the byte-endian swap function
- Transfer end function according to transaction count
- End function of DMA transfer by external trigger (DEND pin)
- SOF plus output function
- Three types of input clock can be selected by built-in PLL
  - ・Select from 48MHz/24MHz/12MHz
- Function to modify the BRDY interrupt event notification timing (BFRE)
- Function to clear the auto buffer memory after the pipe data specified in the DxFIFO port is read (DCLRM)
- Function to provide the auto clock from clock stop status
- NAK setting function (SHTNAK) for PID response corresponding to transfer end

Downloaded from Elcodis.com electronic components distributor

1.2.11 Usage

Navigation systems, DVD recorders, set-top boxes, audio devices, printers, external storage devices and other devices equipped with USB

Downloaded from Elcodis.com electronic components distributor

1.3 Package

1.3.1 Pin Layout

Figure 1.1 shows the pin layout (top view) for this controller.

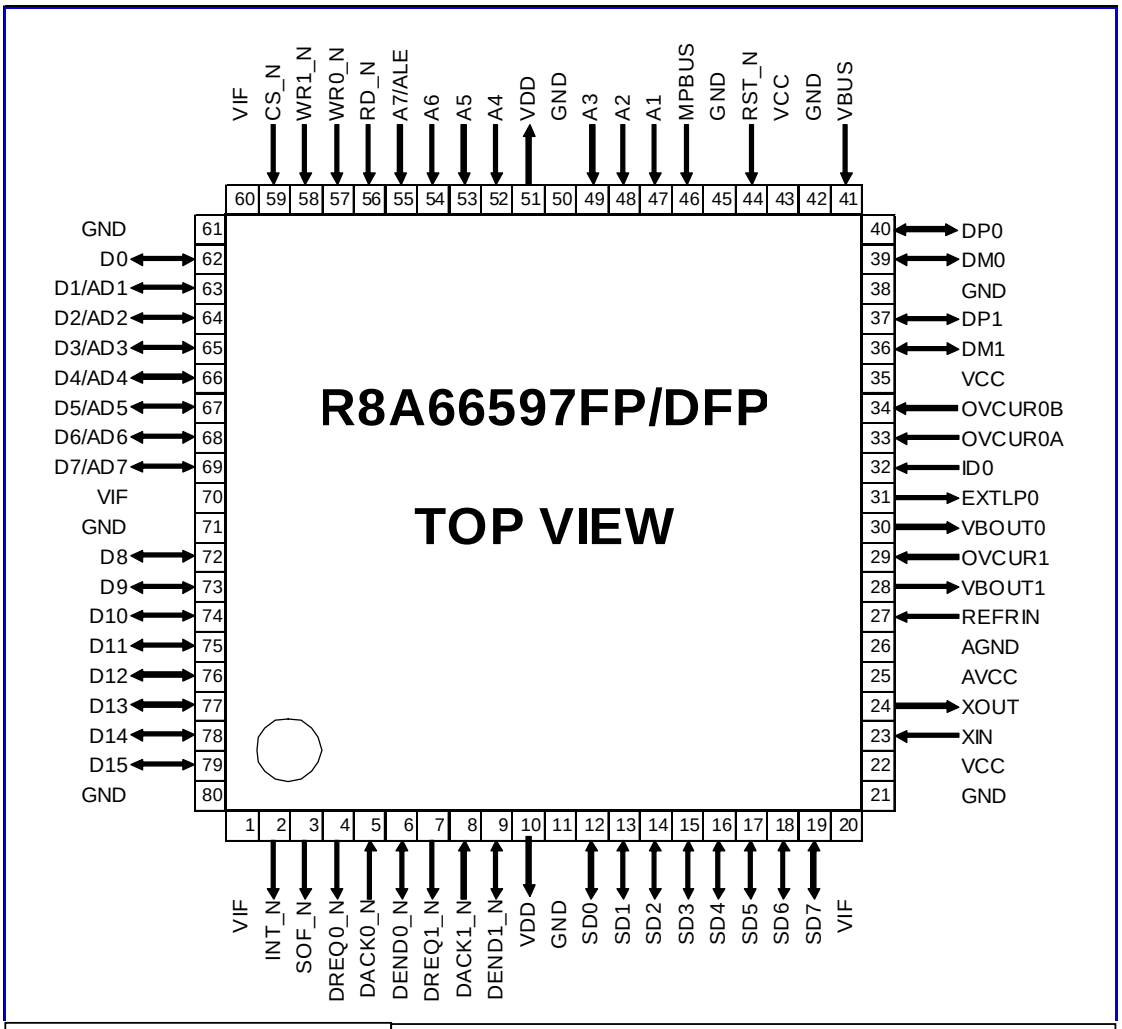

※The "_N" in the signal name indicates that the signal is in the "L" active state.	Package R8A66597 : PLQP0080LA-A : 80pinLQFP (0.4mm pitch)

Figure 1.1 R8A66597FP/DFP Pin Layout

Downloaded from Elcodis.com electronic components distributor

R8A66597BG
(TOP VIEW)

	1	2	3	4	5	6	7	8	9	
A	GND	D15	D14	D10	GND	D5/AD5	D2/AD2	D0	GND	A
B	VIF	INT_N	D13	D11	VIF	D4/AD4	D1/AD1	CS_N	VIF	B
C	DREQ0_N	DACK0_N	SOF_N	D9	D7/AD7	D3/AD3	WR1_N	WR0_N	RD_N	C
D	DREQ1_N	DACK1_N	DEND0_N	D12	D8	D6/AD6	A6	A4	A5	D
E	GND	VDD	DEND1_N	SD0	GND	A7/ALE	A3	VDD	GND	E
F	SD2	SD3	SD4	SD1	VBOUT0	A2	GND	MPBUS	A1	F
G	SD5	SD6	AVCC	VBOUT1	OVCUR1	EXTLP0	ID0	RST_N	VCC	G
H	VIF	SD7	XIN	AGND	VCC	OVCUR0B	OVCUR0A	GND	VBUS	H
J	GND	VCC	XOUT	REFRIN	DM1	DP1	GND	DM0	DP0	J
	1	2	3	4	5	6	7	8	9	

※The "_N" in the signal name indicates that the signal is in the "L" active	Package R8A66597BG : PLBG0081KA-A : 81pinLFBGA (0.5mm pitch)

Figure 1.2 R8A66597BG Pin Layout

Downloaded from Elcodis.com electronic components distributor

1.4 Pin Description

Pin descriptions are given in Table 1.1, and the processing method of unused pins is given in Table 1.2.

Table 1.1 Pin Description

Classification	Pin Name	Name	I/O	Function	Number of Pins	Pin Status *5) Being Reset	Pin Status *5) Immediately After Reset
CPU bus interface	D15-0	Data bus	I/O	This is a 16-bit data bus.	16	*2)	*2)
	AD7-1	Multiplex address bus	I/O	When selecting to the multiplex bus, these pins are used in the time division as a part of the data bus (D7-D1) or address bus (A7-A1).			
	A7-1	Address bus	IN	This is the address bus. A0 does not exist for the 16-bit data bus.	7	Input *3)	Input *3)
	ALE	Address latch enabled	IN	While selecting to the multiplex bus, the A7 pin is used as an ALE signal.		Input	Input
	CS_N	Chip select	IN	The controller is selected in "L" level.	1	Input *4)	Input *4)
	RD_N	Read strobe	IN	Reads the data from the register of this controller in "L" level.	1	Input	Input
	WR0_N	D7-0 Byte write strobe	IN	Writes D7-D0 in the register of this controller at the rising edge.	1	Input *4)	Input *4)
	WR1_N	D15-8 byte write strobe	IN	Writes D15-D8 in the register of this controller at the rising edge.	1	Input *4)	Input *4)
	MPBUS	Bus mode selection	IN	This is a separate bus in "L" level. This is a multiplex bus in "H" Level. Fix either "H" or "L" level.	1	Input *1)	Input *1)
SPLIT bus interface	SD7-0	Split data bus	I/O	When the split bus is selected, it functions as the split data bus.	8	Input (Hi-Z)	Input (Hi-Z)
DMA bus interface	DREQ0_N DREQ1_N	DMA request	OUT	Notifies the DMA transfer request of D0FIFO port and D1FIFO port.	2	H	H
	DACK0_N DACK1_N	DMA acknowledgement	IN	Enter the DMA acknowledgement signal of D0FIFO port and D1FIFO port.	2	Input	Input
	DEND0_N DEND1_N	DMA transfer end	I/O	For FIFO port access write direction: Receives transmission completion signal as an input signal from other chips or CPU. For FIFO port access read direction: Shows the last transmitted data as an output signal.	2	Input (Hi-Z)	Input (Hi-Z)
Interrupt/ SOF output	INT_N	Interrupt	OUT	Notifies various types of interrupts related to USB communication by "L" active. Active is by default "L" active, however it can be changed to "H" active by modifying the setup value of INTA bit in the software.	1	H	H
	SOF_N	SOF pluse output	OUT	For Host function: When the controller issues an SOF, outputs an SOF pulse by "L" active. For Peripheral function: When an SOF is detected, outputs an SOF pulse by "L" active.	1	H	H
Clock	XIN	Input for oscillation	IN	Connect crystal oscillator between XIN and XOUT. Connect external clock signal to XIN in order to input external clock, and leave open XOUT.	1		
	XOUT	Output for oscillation	OUT		1		
System control	USB bus interface	Reset signal	IN	Resets this controller at "L" level.	1	Input (L)	Input (H)

Downloaded from Elcodis.com electronic components distributor

Classification	Pin Name	Name	I/O	Function	Number of Pins	Pin Status *5)	
						Being Reset	Immediately After Reset
USB bus interface	DP0 DP1	USB D+ data	I/O	Connect to D+ pin of USB bus.	2	Input (Hi-Z)	Input (Hi-Z)
	DM0 DM1	USB D-data	I/O	Connect to D- pin of USB bus.	2	Input (Hi-Z)	Input (Hi-Z)
VBUS monitoring input	VBUS	VBUS input	IN	When Host Controller function is selected: leave open or connect directly to Vbus of USB bus. ※This pin cannot supply Vbus to the connected device. When Peripheral Controller function is selected: Connect directly to Vbus of USB bus. Can detect Vbus connection/disconnection. Connect to 5V when not connecting to Vbus.	1	Input (Hi-Z)	Input (Hi-Z)
Reference resistance	REFRIN	Reference input	IN	Connect to analog GND pin through 5.6kΩ±1% resistor.	1		
On-The-Go related	ID0	ID input	IN	When using USB Mini-AB receptacle, connect to ID pin.	1	Input	Input
Power management related if USB Host	VBOUT0 VBOUT1	External power on	OUT	Used for ON/OFF output to external power circuit. Connect to external power circuit for Vbus supply. VBOUT1 pin cannot be used when using DP0/DM0 as OTG.	2	L	L
	OVCUR0A OVCUR0B	Overcurrent input for Port0	IN	Used for input of over-current detection from external power circuit. Connect to PORT0 external power circuit. When input for over-current detection from external power circuit is one pin, connect to OVCUR0A and fix OVCUR0B to High or Low.	2	Input	Input
	OVCUR1	Overcurrent input for Port1	IN	Used for input of over-current detection from external power circuit. Connect to PORT1 external power circuit. OVCUR1 pin cannot be used when using DP0/DM0 as OTG.	1	Input	Input
	EXTLP0	Control of external power for low power consumption	OUT	Used for low-power consumption mode ON/OFF switch when external power circuit has low-consumption mode. Connect to PORT0 external power circuit.	1	L	L
Power /GND	AVCC	Analog power	-	Connect to 3.3V.	1		
	AGND	Analog GND	-		1		
	VCC	Power	-	Connect to 3.3V.	3		
	GND	GND	-		9 (FP) 10(BG)		
	VIF	IO power	-	Connect to 3.3V or 1.8V.	4		
	VDD	Core power	OUT	Output 1.5V with internal regulator –generated. For stability core power, Connect the 4.7uF and 0.1uF capacitor between GND. No connection of external power is necessary.	2		

***1)** The input level of MPBUS pin must be fixed. Do not switch the level during controller operations.
***2)** Pin is for OUTPUT when CS N = “L” and RD N=”L”, otherwise INPUT.
***3)** Hi-Z input (open) is enabled when MPBUS = “H”.
***4)** Maintain status (a) or (b) as described below during reset and immediately after reset release for CS_N, WR0_N and WR1_N signals.
(a) CS_N = “H”
(b) WR0 N = “H” and WR1_N = “H”
***5)** Explanations for “Pin Status” column
(a) input: input port, Hi-Z status (open) disabled
(b) Input (Hi-Z): input port, Hi-Z status (open) enabled
(c) H, L, H/L: indicates output port status

Downloaded from Elcodis.com electronic components distributor

Table 1.2 Example of Unused R8A66597 Pin

Classification	Pin Name	Process Contents
Split Bus Interface	SD7-0	Open
DMA Bus Interface	DREQ0_N, DREQ1_N	Open
	DACK0_N, DACK1_N	Fixed to VIF “H” level *1)
	DEND0_N, DEND1_N	Open *2)
SOF Ouptput	SOF_N	Open
VBUS Monitor Input	VBUS	When using Host Function: open When using Peripheral function: Connect to VBUS signal on USB connector
USB Host: Power Supply Management related	ID0	Fixed to “L”
	VBOUT0, VBOUT1	Open
	OVCUR0A, OVCUR0B, OVCUR1	Fixed to “L”
	EXTLP0	Open

***1)** When not using DACKn_N pin, set DMAnCFG register DFROM bit to “000” and DACKA bit to “0” (n=0, 1)
***2)** When not using DENDn_N pin, set DMAnCFG register DENDE bit to “0” (n=0, 1)

Downloaded from Elcodis.com electronic components distributor

1.5 Structure of Pin Functions

Block diagram of the controller pin functions is shown in Figure 1.3.

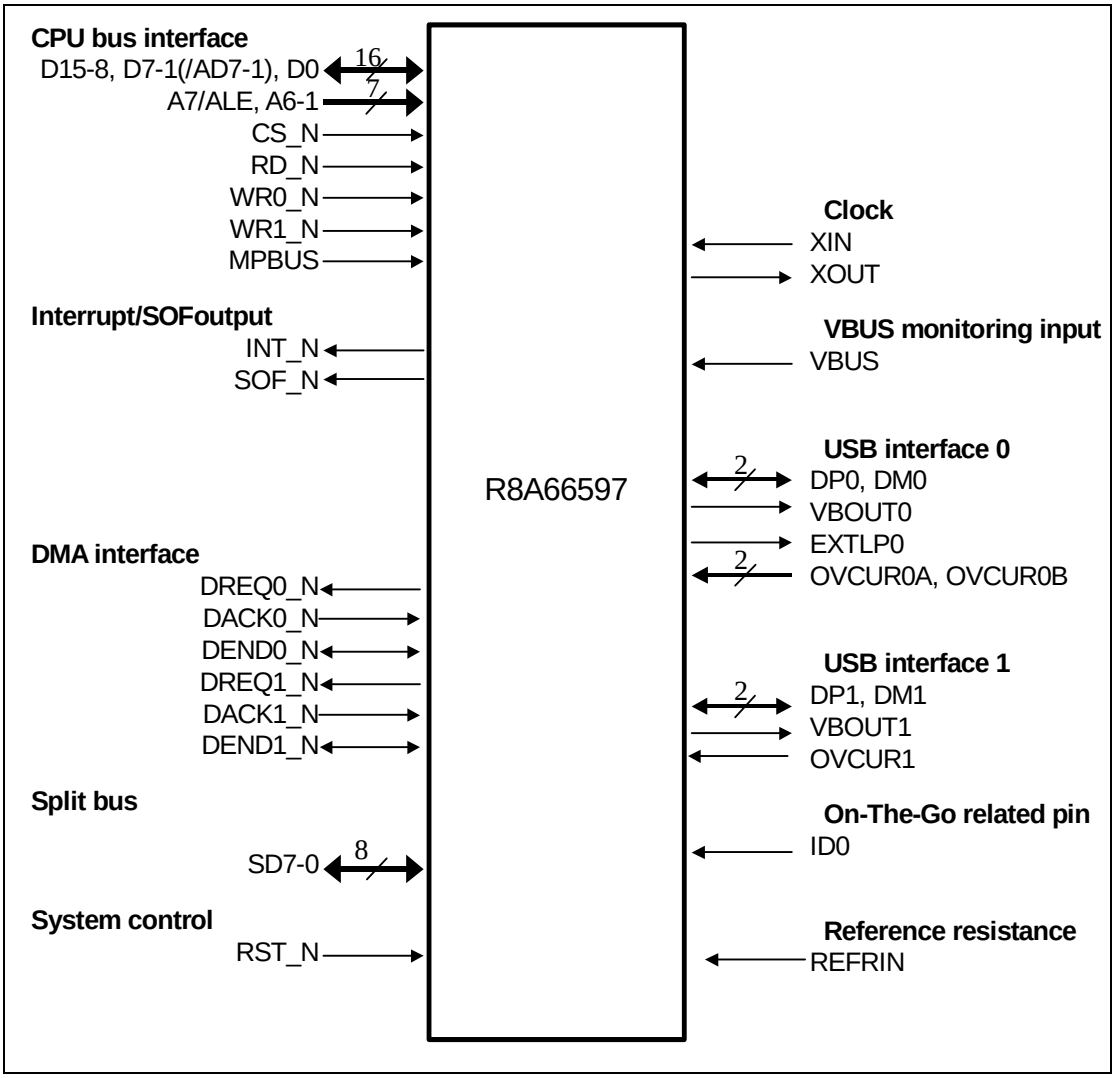

Figure 1.3 Block Diagram of Pin Functions

Downloaded from Elcodis.com electronic components distributor

1.6 Functional Overview

1.6.1 Selection of controller functions

The controller can toggle between Host functions and Peripheral functions according to what is written to the register. The hardware can automatically identify the USB transmission speed, irrespective of whether the Host or Peripheral function is selected.

1.6.2 Bus interface

The controller is compatible with the bus interfaces given below.

1.6.2.1 External bus interface

The CPU accesses the control register of the controller using the CPU bus interface. There are two types of access below for the bus interface from the CPU. Access using a chip select pin (CS_N) and three strobe pins (RD_N, WR0_N and WR1_N).

16-bit separate bus
Seven address buses (A7-1) and sixteen data buses (D15-0) are used.

16-bit multiplex bus
The ALE pin (ALE) and sixteen data buses (D15-0) are used. The data bus uses the address and data in the time division.

Separate bus or multiplex bus are selected at the MPBUS pin signal level while canceling the hardware reset.

1.6.2.2 FIFO buffer memory access method

This controller is compatible with the following two access types as an access method of the FIFO buffer memory for USB data transmission. Read (write) of the data from the FIFO buffer memory is possible by accessing (read/write) the FIFO port from the CPU (DMAC).

(1) CPU access
Write the data in, or read the data from, the FIFO buffer memory using the address signal and control signal.

(2) DMA access
Write the data in the FIFO buffer memory from the CPU's built-in DMAC or dedicated DMAC, or read the data from the FIFO buffer memory.

USB communication is executed by a little endian. A byte endian swap function is provided in the FIFO port access. For 16-bit access, the endian can be changed according to what is written to the register.

1.6.2.3 FIFO buffer memory access method from DMAC

To access the FIFO buffer memory through the DMA access, select an access method from the following:

(1) Method of using common bus with CPU
(2) Method in which dedicated bus (split bus) is used

1.6.3 USB event

The controller notifies the events regarding USB operations to the user system through the interrupt. It also notifies that the DMA interface can access the buffer memory of the selected pipe by asserting the DREQ signal. Depending on what the software writes, interrupt notification activation can be selected for the type and factor.

Downloaded from Elcodis.com electronic components distributor

1.6.4 USB data transfer

All types of data transfer of USB communication, such as control transfer, bulk transfer, interrupt transfer and isochronous transfer, are possible with this controller. The following are the pipe resources for each transfer type:

(1) Control transfer dedicated pipe - 1
(2) Interrupt transfer dedicated pipes - 4
(3) Bulk transfer dedicated pipes - 3
(4) Bulk transfer or isochronous transfer selection pipes - 2

Write the USB transfer requirements for each pipe, such as transfer type, endpoint address, maximum packet size, etc., according to the user system. This controller is equipped with an 8.5KB buffer memory. Allocate the buffer memory according to the user system or execute the settings such as buffer operation mode, for the bulk transfer dedicated pipe, and bulk transfer or isochronous transfer selection pipe. In buffer operations mode, high-performance data transfer with low interrupt frequency is possible by using a double buffer configuration or continuous transfer function of the data packet. A transfer completion function has been added, using the transaction counter function for efficient data transfer rates of bulk and isochronous transfer pipes.

The user system control CPU and DMA controller access the buffer memory through three FIFO port registers.

1.6.5 Interface for access from DMAC

The DMA interface is the data transfer between the user system and this controller, in which the DxFIFO port is used, and it is a data transfer that does not use the CPU. This controller is equipped with 2-ch DMA interface and includes the following functions:

(1) Transfer end notification function corresponding to the transfer end signal (DEND signal)
(2) FIFO buffer auto clear function while receiving a zero-length packet

This controller is equipped with an interface compatible with the two types of DMA transfers given below:

(1) Cycle Steal Transfer
Assert and negate of the DREQ pin is repeatedly transmitted for one data transmission (1 byte/1 word).
(2) Burst Transmission
This is a transmission in which the DREQ pin is asserted (not negated) until the transmission is completed, due to the pipe buffer memory area allocated to the FIFO port or DEND signal.

"CS_N, RD_N and WR_N" or DACK_N can be selected as the handshake signal (pin) of the DMA interface. High-performance DMA transmission is possible in the DMA transmission by a split bus by modifying the data setup timing using an OBUS bit operation of the DMAxCFG register.

1.6.6 SOF pulse output function

This controller is equipped with an SOF pulse output function that notifies the SOF packet send/receive timing. When the Host Controller function is selected, a pulse is output from the SOF_N pin at sending the SOF packet. When the Peripheral Controller function is selected, a pulse is output from the SOF_N pin at receiving the SOF packet. When the SOF packet is damaged, a pulse is output within the specified period according to the SOF interpolation timer.

Downloaded from Elcodis.com electronic components distributor

1.6.7 Importing the external devices

This controller is equipped with the external devices listed below. Also, as the VBUS pin has 5V-tolerant, the user system can connect the VBUS signal directly to this controller.

(1) Resistors necessary in D+ and D-line control
The following D+ and D- resistors necessary for USB communication are installed:
・D+ pull-up resistor (for Peripheral operations)
・D+ pull-down resistor (for host operations)
・D+ and D- termination resistors (for Hi-Speed operations)
・D+ and D- output resistors (for Full-Speed and Low-Speed operations)

(2) 48MHz and 480MHz PLL
Operations can be executed by selecting one of the three types of external clocks (12MHz/24MHz/48MHz).

(3) 3.3V → 1.5V regulator
1.5V core power is generated in this controller. In the system where a 3.3V interface power is used, this controller can be operated on a single power supply.

Downloaded from Elcodis.com electronic components distributor

2 Register

Design of Register Table

① Bit number:
Each register is connected to the 16-bit internal bus. Odd address are from b15 to b8, and even address are from b7 to b0.

② Status after reset:
Indicates the register initial status immediately after the reset operation.
A hardware reset is the initialization status when the external reset signal is entered from the RST_N pin.
A USB reset is the initialization status when a USB bus reset is detected by the controller.
Significant points in the reset operation are mentioned in the notes.
"-" indicates the status of retained user settings without any controller operations.
"?" indicates the status when the value is not determined.

③ Software access conditions:
Conditions when the register is accessed by the software.

④ Hardware access conditions:
Conditions when the register is accessed by the controller during operations other than reset:
R……Read only
W……Write only
R/W…Read/Write
R(0)…"0" Read only
W(1)…"1" Write only

⑤ Remarks:
Remarks and detailed description item number.
H…When the Host Controller function is selected
P…When the Peripheral Controller function is selected

⑥ Name:
This is the bit symbol and bit name.

⑦ Function:
This is the description of the function. When there is no particular rejection, the value during read is the value written by the software or hardware.

Example:
The shaded portions are unassigned. Fix to"0".

① Bit Number →	15	14	13	12	11	10	9	8	7	6	5	4	3	2	1	0
Bit Symbol →		A bit	B bit	C bit												
② Hardware reset →	?	0	0	0												
USB reset →	?	0	-	-												

Bit	Name	Function	Software	Hardware	Remarks
15	Unassigned. Fix to "0".				
14	A bit AAA enabled	0: Operations disabled 1: Operations enabled	R/W	R	Writing disabled when P
13	B bit BBB operation	0: Low output 1: High output	R	W	
12	C bit CCC control	0: …… 1: ……	R(0)/W(1)	R	
	⑥	⑦	③	④	⑤

Remarks

Downloaded from Elcodis.com electronic components distributor

2.1 Register List

The controller register list is shown in Table 2.1.

Table 2.1 Register List

Address	Symbol	Name	Index
00	SYSCFG0	System configuration control register	
02	SYSCFG1	Port1 System configuration control register	
04	SYSSTS0	Port0 System configuration status register	
06	SYSSTS1	Port1 System configuration status register	
08	DVSTCTR0	Port0 Device control register	
0A	DVSTCTR1	Port1 Device control register	
0C	TESTMODE	Test mode register	
0E	PINCFG	Data pin configuration register	
10	DMA0CFG	DMA0 Pin configuration register	
12	DMA1CFG	DMA1 Pin configuration register	
14	CFIFO	CFIFO Port register	
16			
18	D0FIFO	D0FIFO Port register	
1A			
1C	D1FIFO	D1FIFO Port register	
1E			
20	CFIFOSEL	CFIFO Port selection register	
22	CFIFOCTR	CFIFO Port control register	
24			
26			
28	D0FIFOSEL	D0FIFO Port selection register	
2A	D0FIFOCTR	D0FIFO Port control register	
2C	D1FIFOSEL	D1FIFO Port selection register	
2E	D1FIFOCTR	D1FIFO Port control register	
30	INTENB0	Interrupt enable register 0	
32	INTENB1	Interrupt enable register 1	
34	INTENB2	Interrupt enable register 2	
36	BRDYENB	BRDY Interrupt enable register	
38	NRDYENB	NRDY Interrupt enable register	
3A	BEMPENB	BEMP Interrupt enable register	
3C	SOFCFG	SOF Output configuration register	
3E			
40	INTSTS0	Interrupt status register0	
42	INTSTS1	Interrupt status register1	
44	INTSTS2	Interrupt status register2	
46	BRDYSTS	BRDY Interrupt status register	
48	NRDYSTS	NRDY Interrupt status register	
4A	BEMPSTS	BEMP Interrupt status register	
4C	FRMNUM	Frame number register	
4E	UFRMNUM	Microframe number register	
50	USBADDR	USB address register	
54	USBREQ	USB request type register	
56	USBVAL	USB request value register	
58	USBINDX	USB request index register	
5A	USBLENG	USB request length register	
5C	DCPCFG	DCP configuration register	
5E	DCPMAXP	DCP maximum packet size register	
60	DCPCTR	DCP control register	
62			
64	PIPESEL	Pipe window selection register	
66			
68	PIPECFG	Pipe configuration register	
6A	PIPEBUF	Pipe buffer specification register	
6C	PIPEMAXP	Pipe maximum packet size register	
6E	PIPEPERI	Pipe period control register	
70	PIPE1CTR	Pipe1 Control register	
72	PIPE2CTR	Pipe2 Control register	
74	PIPE3CTR	Pipe3 Control register	

Downloaded from Elcodis.com electronic components distributor

Address	Symbol	Name	Index
76	PIPE4CTR	Pipe4 Control register	
78	PIPE5CTR	Pipe5 Control register	
7A	PIPE6CTR	Pipe6 Control register	
7C	PIPE7CTR	Pipe7 Control register	
7E	PIPE8CTR	Pipe8 Control register	
80	PIPE9CTR	Pipe9 Control register	
82-8E			
90	PIPE1TRE	Pipe1 Transaction counter enabled register	
92	PIPE1TRN	Pipe1 Transaction counter register	
94	PIPE2TRE	Pipe2 Transaction counter enabled register	
96	PIPE2TRN	Pipe2 Transaction counter register	
98	PIPE3TRE	Pipe3 Transaction counter enabled register	
9A	PIPE3TRN	Pipe3 Transaction counter register	
9C	PIPE4TRE	Pipe4 Transaction counter enabled register	
9E	PIPE4TRN	Pipe4 Transaction counter register	
A0	PIPE5TRE	Pipe5 Transaction counter enabled register	
A2	PIPE5TRN	Pipe5 Transaction counter register	
A4-CE			
D0	DEVADD0	Device address 0 configuration register	
D2	DEVADD1	Device address 1 configuration register	
D4	DEVADD2	Device address 2 configuration register	
D6	DEVADD3	Device address 3 configuration register	
D8	DEVADD4	Device address 4 configuration register	
DA	DEVADD7	Device address 5 configuration register	
DC	DEVADD6	Device address 6 configuration register	
DE	DEVADD7	Device address 7 configuration register	
E0	DEVADD8	Device address 8 configuration register	
E2	DEVADD9	Device address 9 configuration register	
E4	DEVADDA	Device address A configuration register	
E6			

Nothing is assigned to the shaded portions. Do not access.

Downloaded from Elcodis.com electronic components distributor

2.2 Bit Symbol List

A list of controller bit symbols is shown in Table 2.2.

Table 2.2 Bit Symbol List

Addr	Register name	Odd numbers								Even numbers							
		15	14	13	12	11	10	9	8	7	6	5	4	3	2	1	0
00	SYSCFG0	XTAL		XCKE		PLLC	SCKE			HSE	DCFM	DRPD	DPRPU				USBE
02	SYSCFG1				CNTFLG			PCSDIS	LPSME	HSE		DRPD					
04	SYSSTS0	OVCMON											HDDM		IDMON	LNST	
06	SYSSTS1	OVCMON											HDDM			LNST	
08	DVSTCTR0					HNPBTOA	EXTLP0	VBOUT	WKUP	RWUPE	USBRST	RESUME	UACT		RHST		
0A	DVSTCTR1							VBOUT		RWUPE	USBRST	RESUME	UACT		RHST		
0C	UTEST													UTST			
0E	PINCFG	LDRV															INTA
10	DMA0CFG		DREQA	BURST			DACKA	DFORM			DENDA	PKTM	DENDE		OBUS		
12	DMA1CFG		DREQA	BURST			DACKA	DFORM			DENDA	PKTM	DENDE		OBUS		
14	CFIFO	CFPORT															
16																	
18	D0FIFO	D0FPORT															
1A																	
1C	D1FIFO	D1FIPORT															
1E																	
20	CFIFOSEL	RCNT	REW				MBW		BIGEND			ISEL		CURPIPE			
22	CFIFOCTR	BVAL	BCLR	FRDY		DTLN											
24																	
26																	
28	D0FIFOSEL	RCNT	REW	DCLRM	DREQE		MBW		BIGEND					CURPIPE			
2A	D0FIFOCTR	BVAL	BCLR	FRDY		DTLN											
2C	D1FIFOSEL	RCNT	REW	DCLRM	DREQE		MBW		BIGEND					CURPIPE			
2E	D1FIFOCTR	BVAL	BCLR	FRDY		DTLN											
30	INTENB0	VBSE	RSME	SOFE	DVSE	CTRE	BEMPE	NRDYE	BRDYE								
32	INTENB1	OVRCRE	BCHGE		DTCHE	ATTCHE					EOFERRE	SIGNE	SACKE				
34	INTENB2	OVRCRE	BCHGE		DTCHE	ATTCHE					EOFERRE						
36	BRDYENB	PIPEBRDYE															
38	NRDYENB	PIPENRDYE															
3A	BEMPENB	PIPEBEMPE															
3C	SOFCFG								TRNENSEL		BRDYM	INTL	EDGESTS	SOFM			
3E																	
40	INTSTS0	VBINT	RESM	SOFR	DVST	CTRT	BEMP	NRDY	BRDY	VBSTS	DVSQ			VALID	CTSQ		
42	INTSTS1	OVRCR	BCHG		DTCH	ATTCH					EOFERR	SIGN	SACK				
44	INTSTS2	OVRCR	BCHG		DTCH	ATTCH					EOFERR						
46	BRDYSTS	PIPEBRDY															
48	NRDYSTS	PIPENRDY															
4A	BEMPSTS	PIPEBEMP															
4C	FRMNUM	OVRN	CRCE				FRNM										
4E	UFRMNUM														UFRNM		
50	USBADDR										USBADDR						
52																	
54	USBREQ	bRequest								bmRequestType							
56	USBVAL	wValue															
58	USBINDX	wIndex															
5A	USBLENG	wLength															
5C	DCPCFG								CNTMD	SHTNAK			DIR				
5E	DCPMAXP	DEVSEL									MXPS						
60	DCPCTR	BSTS	SUREQ	CSCLR	CSSTS	SUREQCLR			SQCLR	SQSET	SQMON	PBUSY	PINGE		CCPL	PID	
62																	
64	PIPESEL													PIPESEL			
66																	
68	PIPECFG	TYPE					BFRE	DBLB	CNTMD	SHTNAK			DIR	EPNUM			
6A	PIPEBUF		BUFSIZE								BUFNMB						
6C	PIPEMAXP	DEVSEL					MXPS										
6E	PIPEPERI				IFIS										IITV		

Downloaded from Elcodis.com electronic components distributor

Addr	Register name	Odd numbers								Even numbers							
		15	14	13	12	11	10	9	8	7	6	5	4	3	2	1	0
70	PIPE1CTR	BSTS	INBUFM	CSCLR	CSSTS		ATREPM	ACLRM	SQCLR	SQSET	SQMON	PBUSY				PID	
72	PIPE2CTR	BSTS	INBUFM	CSCLR	CSSTS		ATREPM	ACLRM	SQCLR	SQSET	SQMON	PBUSY				PID	
74	PIPE3CTR	BSTS	INBUFM	CSCLR	CSSTS		ATREPM	ACLRM	SQCLR	SQSET	SQMON	PBUSY				PID	
76	PIPE4CTR	BSTS	INBUFM	CSCLR	CSSTS		ATREPM	ACLRM	SQCLR	SQSET	SQMON	PBUSY				PID	
78	PIPE5CTR	BSTS	INBUFM	CSCLR	CSSTS		ATREPM	ACLRM	SQCLR	SQSET	SQMON	PBUSY				PID	
7A	PIPE6CTR	BSTS		CSCLR	CSSTS			ACLRM	SQCLR	SQSET	SQMON	PBUSY				PID	
7C	PIPE7CTR	BSTS		CSCLR	CSSTS			ACLRM	SQCLR	SQSET	SQMON	PBUSY				PID	
7E	PIPE8CTR	BSTS		CSCLR	CSSTS			ACLRM	SQCLR	SQSET	SQMON	PBUSY				PID	
80	PIPE9CTR	BSTS		CSCLR	CSSTS			ACLRM	SQCLR	SQSET	SQMON	PBUSY				PID	
82-8E																	
90	PIPE1TRE							TRENB	TRCLR								
92	PIPE1TRN	TRNCNT															
94	PIPE2TRE							TRENB	TRCLR								
96	PIPE2TRN	TRNCNT															
98	PIPE3TRE							TRENB	TRCLR								
9A	PIPE3TRN	TRNCNT															
9C	PIPE4TRE							TRENB	TRCLR								
9E	PIPE4TRN	TRNCNT															
A0	PIPE5TRE							TRENB	TRCLR								
A2	PIPE5TRN	TRNCNT															
A4-CE																	
D0	DEVADD0		HPPHUB				HUBPORT			USBSPD							RTPORT
D2	DEVADD1		HPPHUB				HUBPORT			USBSPD							RTPORT
D4	DEVADD2		HPPHUB				HUBPORT			USBSPD							RTPORT
D6	DEVADD3		HPPHUB				HUBPORT			USBSPD							RTPORT
D8	DEVADD4		HPPHUB				HUBPORT			USBSPD							RTPORT
DA	DEVADD5		HPPHUB				HUBPORT			USBSPD							RTPORT
DC	DEVADD6		HPPHUB				HUBPORT			USBSPD							RTPORT
DE	DEVADD7		HPPHUB				HUBPORT			USBSPD							RTPORT
E0	DEVADD8		HPPHUB				HUBPORT			USBSPD							RTPORT
E2	DEVADD9		HPPHUB				HUBPORT			USBSPD							RTPORT
E4	DEVADDA		HPPHUB				HUBPORT			USBSPD							RTPORT
E6																	

Downloaded from Elcodis.com electronic components distributor

2.3 System Configuration Control

♦ System configuration control register (SYSCFG0) <Address: 00H>

15	14	13	12	11	10	9	8	7	6	5	4	3	2	1	0
XTAL		XCKE		PLLC	SCKE			HSE	DCFM	DRPD	DPRPU				USBE
0	0	0	?	0	0	?	?	0	0	0	0	?	?	?	0
-	-	-	?	-	-	?	?	-	-	-	-	?	?	?	-

Bit	Name	Function	Software	Hardware	Remarks
15-14	XTAL XIN clock selection	Specifies the clock frequency entered from the XIN pin. 00: 12MHz input 01: 24MHz input 10: 48MHz input 11: Reserved	R/W	R	
13	XCKE Oscillation buffer enabled	Specifies whether the oscillation buffer operations are disabled or enabled. 0: Oscillation buffer operations disabled 1: Oscillation buffer operations enabled	R/W	R	
12	Unassigned. Fix to "0".				
11	PLLC 48MHz PLL Operations enabled	Specifies whether 48MHz PLL operations are disabled or enabled. 0: PLL operations disabled 1: PLL operations enabled	R/W	R/W	
10	SCKE USB block clock enabled	Specifies whether 48MHz clock can be provided to USB block. 0: Cannot provide clock to USB block 1: Can provide clock to USB block	R/W	R/W	
9-8	Unassigned. Fix to "0".				
7	HSE Port0 Hi-Speed Operations enabled	Specifies whether Port0 Hi-Speed operations are disabled or enabled. 0: Hi-Speed operations disabled (When a Peripheral function is selected: Full-Speed, When the Host function is selected: Full-Speed/Low-Speed) 1: Hi-Speed operations enabled (Controller detects communication speed)	R/W	R	
6	DCFM Controller functions selection	Specifies the controller functions. 0: Peripheral Controller function selection 1: Host Controller function selection	R/W	R	
5	DRPD D+/D-line resistance control of Port0	Specifies whether D+/D- line pull-down for the Host Controller function of Port0 is disabled or enabled. 0: Pull-down disabled 1: Pull-down enabled	R/W	R	H (Write to "0" when P)
4	DPRPU D+line resistance control	Specifies D+ line pull-up for the Peripheral Controller function of Port0 is disabled or enabled. 0: Pull-up disabled 1: Pull-up enabled	R/W	R	P (Write to "0" when H)
3-1	Unassigned. Fix to "0".				
0	USBE USB block operations enabled	Specifies USB block operations are disabled or enabled. 0: USB block operations disabled 1: USB block operations enabled	R/W	R	

Remarks
None

Downloaded from Elcodis.com electronic components distributor

2.3.1 XIN clock selection bit (XTAL)

In this bit, write the value corresponding to the quartz crystal or oscillator connected to the XIN pin. This controller determines the increasing multiples of 48MHz PLL according to the setup value of this bit.

This bit is set immediately after a hardware reset. Do not modify it during controller operations.

2.3.2 Oscillation buffer enable bit (XCKE)

Write "1" to this bit to enable the oscillation buffer operations of this controller. Write "0" to disable the oscillation buffer operations.

Do not write "XCKE=0" for the time (time when "CNTFLG=1" is displayed) when clock restoration process is carried out by the controller. Write "XCKE=1" to end the clock restoration process.

2.3.3 48MHz PLL operations enabled bit (PLLC)

Write "1" to this bit to enable this controller's 48MHz PLL operations. Write "0" to disable them.

2.3.4 USB block clock enabled bit (SCKE)

Write "1" to this bit to enable this controller's clock supply to the USB block. Write "0" to disable it.

When "0" is written to this bit, the registers that can be written to are shown in Table 2.3. Other registers cannot be written. Each register can be read when "0" is written to this bit.

Table 2.3 List of Registers That Can Be Written by the Software When "SCKE=0"

Address	Register name
00H	SYSCFG0
02H	SYSCFG1
0EH	PINCFG

2.3.5 Hi-Speed operations enabled bit (HSE)

Write "1" to this bit to enable Hi-Speed operations for Port0. When "HSE=1" is written, this controller operates Port0 with Hi-Speed or Full-Speed depending on the reset handshake result.

2.3.5.1 Host Controller function selection

When "HSE=0" is written, the port operates at Low-Speed or Full-Speed. When it is detected that a Low-Speed peripheral device is attached to the port, always write "HSE=0". When "HSE=1" is written, this controller executes the reset handshake protocol and, depending on its result, the port operates at Hi-Speed or Full-Speed automatically.

This bit can be modified "after attach detection (**ATTCH** interrupt detection) and before the USB bus reset (before writing "USBRESET=1")".

Downloaded from Elcodis.com electronic components distributor

2.3.5.2 Peripheral Controller function selection

When "HSE=0" is written, the controller executes Full-Speed operations. When "HSE=1" is written, the controller executes reset handshake protocol and, depending on the result, Hi-Speed or Full-Speed operations are executed automatically.

This bit can be modified when "DPRPU=0".

2.3.6 Controller function selection bit (DCFM)

Set this bit to specify the Host Controller function or Peripheral Controller function for the controller.

This bit can be modified when "DPRPU=0" and "DRPD=0".

2.3.7 D+, D- line resistance control for Port0 (DRPD and DPRPU)

Settings related to USB data bus resistance of Port0 are given in Table 2.4. Select USB data bus resistance in **DRPD** and **DPRPU** bits.

Table 2.4 Port0 USB Data Bus Resistance Control

Write	Contents			USB data bus resistance control
DRPD	DPRPU	D- Line	D+ Line	Remarks
0	0	Open	Open	
0	1	Open	Pull-up	Execute these settings when the controller is operated as the Peripheral Controller.
1	0	Pull-down	Pull-down	Execute these settings when the controller is operated as the Host Controller.
1	1	Pull-down	Pull-up	Write disabled

2.3.7.1 Port0 pull-down resistance control (DRPD) for the Host Controller function

If "1" is written to this bit while selecting the Host Controller function, the controller pulls down the Port0 D+ and D- lines.

When selecting the Host Controller function, write "1" to this bit.

2.3.7.2 Port0 D+ pull-up resistance control (DPRPU) for the Peripheral Controller function

If "1" is written to this bit while selecting the Peripheral Controller function, the controller pulls up the Port0 D+ line to 3.3V, and can notify the USB host of an "attach". The controller cancels the D+ line pull-up if the bit setting is changed from "1" to "0", and the status for the USB Host can be shown as detached.

Set this bit to "1" when selecting the Peripheral Controller function.

Downloaded from Elcodis.com electronic components distributor

2.3.8 USB block operations enabled bit (USBE)

This controller's USB block operations can be enabled/disabled by writing to this bit. If the bit is modified from "USBE=1" to "USBE=0", the controller initializes the bits shown in Table 2.5 and Table 2.6.

Table 2.5 List of Registers Initialized When Writing "USBE=0"
(When the Peripheral Controller function ("DCFM=0" setting) is selected)

Register Name	Bit name	Remark
SYSSTS0 SYSSTS1	LNST	Value retained while selecting the Host Controller function
DVSTCTR0 DVSTCTR0	RHST	
INTSTS0	DVSQ	Value retained while selecting the Host Controller function
USBADDR	USBADDR	Value retained while selecting the Host Controller function
USBREQ	bRequest bmRequestType	Value retained while selecting the Host Controller function
USBVAL	wValue	Value retained while selecting the Host Controller function
USBINDX	wIndex	Value retained while selecting the Host Controller function
USBLENG	wLength	Value retained while selecting the Host Controller function

Table 2.6 List of Registers Initialized When Writing "USBE=0"
(While the Host Controller function ("DCFM=1" setting) is selected)

Register Name	Bit Name	Remark
DVSTCTR0 DVSTCTR0	RHST	
FRMNUM	FRNM	Value retained while selecting the Peripheral Controller function
UFRMNUM	UFRNM	Value retained while selecting the Peripheral Controller function

This bit can be modified when "SCKE=1".

When selecting the Host Controller function, write "DPRD=1", reject the **LNST** bit chattering, confirm that the USB bus is stable, and then write "USBE=1".

Downloaded from Elcodis.com electronic components distributor

♦ Port1 System configuration control register [SYSCFG1] <Address: 02H>

15	14	13	12	11	10	9	8	7	6	5	4	3	2	1	0
			CNTFLG			PCSDIS	LPSME	HSE		DRPD					
? ?	? ?	? ?	0 -	? ?	? ?	0 -	0 -	0 -	? ?	0 -	? ?	? ?	? ?	? ?	? ?

Bit	Name	Function	Software	Hardware	Remarks
15-13	Unassigned. Fix to "0".				
12	CNTFLG Auto clock monitor	Displays whether auto clock setup process is currently being executed. 0: Auto clock process complete or clock stopped 1: Auto clock processing	R	W	
11-10	Unassigned. Fix to "0".				
9	PCSDIS Restoration from low power sleep mode by CS N disabled	Specifies whether restoration from low power sleep mode is possible due to fall in CS_N. 0: Restoration enabled due to CS_N 1: Restoration disabled due to CS_N	R/W	R	
8	LPSME Low power sleep mode enabled	Specifies whether the controller can shift to low power sleep mode when the clock is being stopped. 0: Low power sleep mode disabled 1: Low power sleep mode enabled	R/W	R	
7	HSE Port1 Hi-Speed operations enabled	Enables Port1 Hi-Speed operations when the Host Controller function is selected. 0: Hi-Speed operations disabled (Full-/Low-Speed) 1: Hi-Speed operations enabled (controller detects)	R/W	R	H (Write to "0" when P)
6	Unassigned. Fix to "0".				
5	DRPD D+/D- line resistance control of Port1	Specifies whether D+/D- line pull-down for the Host Controller function of Port1 is disabled or enabled 0: Pull-down disabled 1: Pull-down enabled	R/W	R	H (Write to "0" when P)
4-0	Unassigned. Fix to "0".				

Remarks
None

2.3.9 Auto clock monitoring bit (CNTFLG)

This bit sets "1" when the clock restoration process is being executed by the controller. This bit is modified from "0" to "1" when the clock restoration process by the controller is started, and after the clock is restored and when "SCKE=1", "1" is modified to "0".

2.3.10 CS_N Restoration disabled bit (PCSDIS)

This bit enables or disables the falling edge of CS_N as an event to shift the controller from low power sleep mode to normal status. Refer to Table 2.7 for the difference in restoration events according to the setup value of this bit.

Downloaded from Elcodis.com electronic components distributor

2.3.11 Low power sleep mode enabled bit (LPSME)

This controller enters low power sleep mode when the oscillation buffer is stopped ("XCKE=0" setting) and when "LPSME=1". The standby power can be further reduced compared to when "LPSME=0" and in the oscillation buffer stopped mode.

The two types of events that help this controller restore to normal clock operating status from the low power sleep mode, which was caused by "LPSME=1" and "XCKE=0", are given below.

Table 2.7 Restoration Event from Low Power Sleep Mode ("LPSME=1" and "XCKE=0")

Controller Function Selection (DCFM Bit Setup Value)	Conditions	Restoration Events
When selecting the Peripheral Controller function	If writing "PCSDIS=0"	(1) RESM interrupt detection if writing "RSME=1" (2) VBINT interrupt detection if writing "VBSE=1" (3) CS_N signal assert by dummy reading from CPU
	If writing "PCSDIS=1"	(1) RESM interrupt detection if writing "RSME=1" (2) VBINT interrupt detection if writing "VBSE=1"
When selecting the Host Controller function	If writing "PCSDIS=0"	(1) BCHG interrupt detection in the port written as "BCHGE=1" (2) CS_N signal assert by dummy reading from CPU
	If writing "PCSDIS=1"	(1) BCHG interrupt detection in the port written as "BCHGE=1"

Write "LPSME=1" when "XCKE=1". When writing "LPSME=1", writing "XCKE=0" makes this controller enter low power sleep mode, and access to the controller is disabled for 10µs. Therefore, exit from low power sleep mode with a dummy reading from the CPU after at least 10µs have elapsed after writing "XCKE=0". When the controller is shifted to low power sleep mode, the value in the FIFO buffer is lost. While using the controller with "LPSME=1", read the FIFO contents or clear the FIFO buffer before writing "XCKE=0".

2.3.12 Hi-Speed operations enabled bit (HSE)

Hi-Speed operations are enabled for Port1 by writing "1" to this bit". If "HSE=1" written, the controller operates Port1 at Hi-Speed or Full-Speed according to the reset handshake result.

2.3.12.1 Selecting the Host Controller function

Refer to 2.3.5.1.

2.3.12.2 Selecting the Peripheral Controller function

Write "0" to this bit.
Port1 cannot be used when the Peripheral Controller function is in use.

2.3.13 D+, D- line resistor control bit for Port1 (DRPD)

The settings for the Port1 USB data bus resistor are shown in Table 2.8. Select the USB data bus resistance using the **SYSCFG1** register **DRPD** bit.

Table 2.8 Port1 USB Data Bus Resistance Control

DRPD	D- Line	D+ Line	Remarks
0	Open	Open	When Port1 is not used
1	Pull-down	Pull-down	Write to this status during operations as Host Controller.

The controller pulls down the Port1 D+ and D- lines if "1" is written to this bit when selecting the Host Controller function.

Downloaded from Elcodis.com electronic components distributor

2.4 System Configuration Status

♦ Port0 System Configuration Status Register [SYSSTS0] <Address: 04H>

15	14	13	12	11	10	9	8	7	6	5	4	3	2	1	0
OVCMON													IDMON	LNST	
?	?	?	?	?	?	?	?	?	?	?	?	?	?	0	0
?	?	?	?	?	?	?	?	?	?	?	?	?	?	?	?

Bit	Name	Function	Software	Hardware	Remarks
15-14	OVCMON OVCUR0A, OVCUR0B pin monitor	Sets the input status of OVCUR0A and OVCUR0B pins. 00: OVCUR0A=Low, OVCUR0B=Low 01: OVCUR0A=Low, OVCUR0B=High 10: OVCUR0A=High, OVCUR0B=Low 11: OVCUR0A=High, OVCUR0B=High	R	W	
13-6	Unassigned. Fix to "0".				
5	SOFEA Port 0 HOST SOF active monitor	Displays the status of UACT bit setting in response to Port0 operations 0: (micro) SOF issuance stopped 1: (micro) SOF issuance continued	R	W	
4-3	Unassigned. Fix to "0".				
2	IDMON ID pin monitor	Sets the input status of ID0 pin. 0: ID0=Low 1: ID0=High	R	W	
1-0	LNST Port0 USB data line interface monitor	Sets the USB line status of Port0. ※Refer to the detailed explanation.	R	W	

Remarks
None

2.4.1 OVCUR0A, OVCUR0B pin monitor bit (OVCMON)

The controller sets the OVCUR0A pin status to bit 15 of this register, and the input status of OVCUR0B pin to bit 14.

2.4.2 Port0 HOST SOF Active Monitor Bit (SOFEA)

When the UACT bit is set to “1” by software while the Host Controller function is valid, the controller displays “1” at this bit, puts PORT0 in the USB bus enabled status, and outputs SOF.

When the UACT bit is set to “0” by software, the controller goes to the idle status after SOF is output, and displays “0” at this bit.

When a suspend is executed, after the UAC bit is cleared to “0” by software, this bit can be used to confirm that the controller outputs the last SOF to Port0

2.4.3 ID0 pin monitor bit (IDMON)

The controller sets the input status of the ID0 pin to this bit.

2.4.4 Line status monitor bit (LNST)

USB data bus line status table of the controller is shown in Table 2.9. The controller monitors the Port0 USB data bus line status (D+ and D- line) in the **SYSSTS0** register **LNST** bit.

Refer to this **LNST** bit after the "attach" process (write "DPRPU=1") when the Peripheral Controller function is selected, and after pull-down is enabled (write "DRPD=1") when the Host Controller function is selected.

Downloaded from Elcodis.com electronic components distributor

Table 2.9 USB Data Bus Line Status

LNST [1]	LNST [0]	Low-Speed operations (Only when the Host Controller function is selected)	Full-Speed operations	Hi-Speed operations	Chirp operations
0	0	SE0	SE0	Squelch	Squelch
0	1	K-State	J-State	Unsquelch	Chirp J
1	0	J-State	K-State	Invalid	Chirp K
1	1	SE1	SE1	Invalid	Invalid

Chirp: Reset handshake protocol being executed in Hi-Speed operations enabled status (HSE="1")
Squelch: SE0 or idle status
Unsquelch: Hi-Speed J State or Hi-Speed K State
Chirp J: Chirp J-State
Chirp K: Chirp K-State

Downloaded from Elcodis.com electronic components distributor

♦ Port1 System Configuration Status Register [SYSSTS1] <Address: 06H>

15	14	13	12	11	10	9	8	7	6	5	4	3	2	1	0
OVCMON										SOFEA				LNST	
? ?	0 0	? ?	? ?	? ?	? ?	? ?	? ?	? ?	? ?	0 ?	? ?	? ?	? ?	0 ?	0 ?

Bit	Name	Function	Software	Hardware	Remarks
15-14	OVCMON OVCUR1 pin monitor	Sets the status of OVCUR1 pin in bit 15. Bit 14 is fixed to "0". 00: OVCUR1=Low 10: OVCUR1=High	R	W	
13-6	Unassigned. Fix to "0".				
5	SOFEA Port1 HOST SOF active monitor	Displays the status of UACT bit setting in response to Port1 operations 0: (micro) SOF issuance stopped 1: (micro) SOF issuance continued	R	W	
4-2	Unassigned. Fix to "0".				
1-0	LNST Port1 USB data line status monitor	Sets the Port1 USB line status. ※ Refer to the detailed explanation.	R	W	H (Read value is invalid when P)

Remarks
None

2.4.5 OVCUR1 pin monitor bit (OVCMON)

The controller sets the OVCUR1 pin status to bit 15 of this resister. Bit 14 is fixed to "0".

2.4.6 Port1 HOST SOF Active Monitor Bit (SOFEA)

When the **UACT** bit is set to “1” by software while the Host Controller function is valid, the controller displays “1” at this bit, puts PORT1 in the USB bus enabled status, and outputs SOF.

When the **UACT** bit is set to “0” by software, the controller goes to the idle status after SOF is output, and displays “0” at this bit.

When a suspend is executed, after the UAC bit is cleared to “0” by software, this bit can be used to confirm that the controller outputs the last SOF to Port1

2.4.7 Line status monitor bit (LNST)

The controller monitors the USB data bus line status (D+ line and D- line) of Port1 in the **SYSSTS1** register **LNST** bit. Each **LNST** bit consists of two bits. Refer to Table 2.9 for the meaning of each bit.

The Port1 **LNST** bit is valid only when the Host Controller function is selected. Refer to the **LNST** bit after pull-down is enabled (write "DRPD=1") while selecting the Host Controller function.

Downloaded from Elcodis.com electronic components distributor

2.5 USB Signal Control

♦ Device state control register [DVSTCTR0] <Address: 08H>

15	14	13	12	11	10	9	8	7	6	5	4	3	2	1	0
				HNPBTOA	EXTLP0	VBOUT	WKUP	RWUPE	USBRST	RESUME	UACT		RHST		
?	?	?	?	0	0	0	0	0	0	0	0	?	0	0	0
?	?	?	?	-	-	-	0	-	-	-	-	?	-	-	-

Bit	Name	Function	Software	Hardware	Remarks
15-12	Unassigned. Fix to "0".				
11	HNPBTOA HNP (Host Negotiation Protocol) B Device Host transition control bit	Used for HNP switch from Peripheral to Host when controller is used as On-The-Go (OTG) B-Device. 0: Normal operations 1: Enabled to from OTG Peripheral to Host			
10	EXTLP0 EXTLP0 pin output control	Controls the status to be output to the EXTLP0 pin. 0: EXTLP0 low output (default) 1: EXTLP0 high output	R/W	R	
9	VBOUT VBOUT0 pin output control	Controls the status to be output to the VBOUT0 pin. 0: VBOUT0=Low output (Default) 1: VBOUT0=High output	R/W	R	
8	WKUP Wakeup output	Specifies whether the remote wakeup (resume signal output) is disabled/enabled when the Peripheral Controller function is in use. 0: Remote wakeup signal not output 1: Remote wakeup signal output	R/W(1)	R/W(0)	P (Write to "0" when H)
7	RWUPE Remote wakeup detection disabled	Specifies whether detection of remote wakeup (resume signal output) from Peripheral Device connected to PORT0 is disabled/enabled when Host Controller function is in use. 0: Down port remote wakeup output disabled 1: Down port remote wakeup enabled	R/W	R	H (Write to "0" when P)
6	USBRST Port0 USB bus reset output	Controls the USB reset output control of Port0. 0: Not output 1: USB bus reset output signal output	R/W	R	H (Write to "0" when P)
5	RESUME Port0 resume output	Controls the resume output of Port0. 0: Not output 1: Resume signal output	R/W	R/W(1)	H (Write to "0" when P)
4	UACT Port0 USB bus enabled	Enables USB bus operations. 0: Down Port operations disabled (SOF/MicroSOF delivery disabled) 1: Down Port operations enabled (SOF/MicroSOF delivery enabled)	R/W	R/W(0)	H (Write to "0" when P)
3	Unassigned. Fix to "0".				
2-0	RHST Port0 reset handshake	Displays the Port0 reset handshake status. ※ Refer to the detailed explanation.	R	W	

Remarks
None

Downloaded from Elcodis.com electronic components distributor

2.5.1 HNP (Host Negotiation Protocol) B-Device Transition Control Bit (HNPBTOA)

When using the controller as the On-The-Go (OTG) B-Device, set this bit to “1” during the HNP switch from Peripheral to Host.
When this bit is “1”, the controller’s internal peripheral control circuit holds the suspend status until the HNP process is completed, regardless of “DPRPU=0” or “DCFM=1” software settings. In addition, the Resume (**RESM**) interrupt will not be generated even if a falling edge is detected on the D+ signal.

Only program this bit to “1” while operating the controller as an OTG B-Device and the Peripheral Controller Function is in the suspend status.

2.5.2 EXTLP0 Pin Output Control Bit (EXTLP0)

If “1” is written to this bit, the controller outputs High from the **EXTLP0** pin. If "0" is writthen to the bit, it outputs Low.

2.5.3 VBOUT Pin Output Control Bit (VBOUT0)

If “1” is written to this bit, the controller outputs High from the **VBOUT0** pin. If "0" is writthen to the bit, it outputs Low.

2.5.4 Remote wakeup (resume signal output) enabled/disabled bit for the Peripheral Controller function (WKUP)

If "1" is written to this bit while selecting the Peripheral Controller function, the controller outputs the remote wakeup signal to the Port0 USB bus. The controller manages the output time of the remote wakeup signal. If the software writes "1" to the **WKUP** bit, the controller outputs a "K-State" of 10ms and then changes the setting to "WKUP=0". According to the USB Specification Revision 2.0, the USB bus idle status should be maintained for at least 5ms until the remote wakeup signal is sent. Therefore, the controller outputs a K-State after waiting for 2ms, although "WKUP=1" is written immediately after detecting the suspend status.

Write "1" to the **WKUP** bit only when the device state is suspend ("DVSQ=1xx") and when the remote wakeup is enabled from the USB Host. Do not stop the internal clock when "1" is written to the **WKUP** bit, irrespective of the suspend status (write "WKUP=1" in the "SCKE=1" status).

2.5.5 Port0 remote wakeup detection disabled/enabled bit for the Host Controller function (RWUPE)

If "1" is written to this bit while selecting the Host Controller function, the controller detects the remote wakeup signal (K-State during 2.5µs) from the Peripheral device connected to the port and executes the resume process (K-State drive). When "0" is written to this bit, the controller ignores the remote wakeup signal (K-State) from the Peripheral device connected to the port, irrespective of detecting it.

When "1" is written to this bit, do not stop the internal clock even if it is in suspend status (keep in "SCKE=1" status). Do not reset the USB bus (write "USBRST=1") in suspend status. This is disabled in the USB Specification Revision 2.0.

2.5.6 Port0 USB bus reset output disabled/enabled bit for Host Controller function (USBRST)

If writing "1" to this bit while selecting the Host Controller function, the controller drives the port SE0 drive and executes the USB bus reset process. In this case, if the HSE bit compatible to Port0 is "1", execute the reset handshake protocol. This controller continues with the SE0 output when "USBRST=1" (until the software writes "USBRST=0"). While "USBRST=1" (USB bus reset time), write the time based on the USB Specification Revision 2.0.

The USB bus is not reset until this controller changes to "UACT=0" and "RESUME=0" when "1" is written to this bit in ("UACT=1") communicate or ("RESUME=1") resume status.

Write "1" to the **UACT** bit simultaneously with the USB bus reset termination (write "USBRST=0").

Downloaded from Elcodis.com electronic components distributor

2.5.7 Port0 resume signal output bit for the Host Controller function (RESUME)

If "1" is written to this bit while selecting the Host Controller function, the controller drives Port0 to the K-State and executes resume output. The controller sets this bit to “1” when “RWUPE=1” and the remote wakeup signal is detected in the USB suspend status. The controller continues with the K-State output when "RESUME=1" (until the software writes "RESUME=0"). While "RESUME=1" (resume time), write the time based on the USB Specification Revision 2.0.

Write "1" to this bit during the suspend process. Write "1" to the **UACT** bit and USB bus reset termination (write "USBRST=0") simultaneously.

2.5.8 Port0 USB bus operations enabled bit for the Host Controller function (UACT)

If "1" is written to this bit while selecting the Host Controller function, the controller changes the status of Port0 to USB bus enabled status, outputs SOF, and sends/receives the data. Once the software writes "UACT=1", SOF output starts within one (micro) frame time.

When the software writes "1" to this bit", the controller transfers to idle status after the (micro) SOF output.

The controller write "1" to this bit in the following cases:
(1) When the **DTCH** interrupt is detected during communication (if writing "UACT=1")
(2) When the **EOFERR** interrupt is detected during communication (if writing "UACT=1")

Write "1" to this bit while terminating the USB reset process (write "USBRST=0") or while terminating the suspension process (write "RESUME=0").

2.5.9 Port0 reset handshake status bit (RHST)

The controller sets the result of the Port0 reset handshake in this bit. The results of reset handshake are listed in Table 2.10.

Table 2.10 USB Data Bus Line Status

Bus Status	RHST	Bit Value
	While selecting the Peripheral Controller function	While selecting the Host Controller function
When powered or during disconnect	000	000
During reset handshake	100	1xx
When connecting to Low-Speed	-	001
When connecting to Full-Speed	010	010
When connecting to Hi-Speed	011	011

2.5.9.1 Selecting the Host Controller function

While selecting the Host Controller function, the bit sets "100" when the software writes "USBRST=1". When "HSE=1" is selected for the port, the bit setss "111" when the controller detects a Chirp K from the Peripheral device. The controller writes the **RHST** bit value when the software writes "USBRST=0" to the port, and when the controller terminates the SE0 drive.

When the software writes "UTST=1xxx" (when parameters are written for a host test), the bit sets "011".

Downloaded from Elcodis.com electronic components distributor

2.5.9.2 Selecting the Peripheral Controller function

When "HSE=1" is set for the port, the bit shows "100" when the controller detects a USB bus reset. The controller then outputs Chirp K, and this bit shows "011" when Chirp JK is detected three times from the USB Host. After Chirp K is output, if it is not set to Hi-Speed within 2.5ms, the bit shows "010".

When "HSE=0" is set for the port, the bit shows "010" when the controller detects the USB bus reset.

A **DVST** interrupt is generated when the **RHST** bit is set to "0101" or "011" after the USB bus reset is detected by the controller.

Downloaded from Elcodis.com electronic components distributor

♦ Device state control register [DVSTCTR1] <Address: 0AH>

15	14	13	12	11	10	9	8	7	6	5	4	3	2	1	0
						VBOUT		RWUPE	USBRST	RESUME	UACT		RHST		
? ?	? ?	? ?	? ?	? ?	? ?	0 -	? ?	0 -	0 -	0 -	0 -	? ?	0 -	0 -	0 -

Bit	Name	Function	Software	Hardware	Remarks
15-10	Unassigned. Fix to "0".				
9	VBOUT VBOUT pin output control	Controls the status output to the VBOUT1 pin. 0: VBOUT1=Low output (default) 1: VBOUT1=High output	R/W	R	
7	RWUPE Port1 remote wakeup detection allowed	Controls the remote wakeup detection allow/prohibited from the Peripheral device connected to Port1. 0: Down port wakeup prohibited 1: Down port wakeup allowed	R/W	R	H (Write to "0" when P)
6	USBRST Port1 USB bus reset output	Controls the USB bus reset output of Port1. 0: USB bus reset not output 1: USB bus reset signal output	R/W	R	H (Write to "0" whenP)
5	RESUME Port1 resume output	Controls the resume output of Port1. 0: Resume no signal output 1: Resume signal output	R/W	R/W(1)	H (Write to "0" when P)
4	UACT Port1 USB bus allowed	Enables USB bus of Port1. 0: Down port prohibited (SOF/µSOF delivery prohibited) 1: Down port allowed (SOF/µSOF delivery allowed)	R/W	R	H (Write to "0" when P)
3	Unassigned. Fix to "0".				
2-0	RHST Port1 reset handshake	Status or result of Port1 reset handshake of is set. 000: When powered or disconnected 1xx: During reset handshake 001: When connecting to Low-Speed 010: When connecting to Full-Speed 011: When connecting to Hi-Speed	R	W	H (Write to "0" when P)

Remarks
None

2.5.10 Port1 remote wakeup detection allowed/prohibited bit for the Host Controller function (RWUPE)

Refer to 2.5.5.

2.5.11 Port1 USB bus reset output disabled/enabled bit for the Host Controller function (USBRST)

Refer to 2.5.6.

2.5.12 Port1 resume signal output bit for the Host Controller function (RESUME)

Refer to 2.5.7.

2.5.13 USB bus operations enabled bit of Port1 for the Host Controller function (UACT)

Refer to 2.5.8.

Downloaded from Elcodis.com electronic components distributor

2.5.14 Reset handshake status bit of Port1 (RHST)

The controller displays the result of the Port1 reset handshake in this bit. The reset handshake results are shown in Table 2.10.

Table 2.11 USB Data Bus Line Status

Bus status	RHST	Bit value
	When the Peripheral Controller function is selected	When the Host Controller function is selected
When powered or disconnected	-	000
During reset handshake	-	1xx
When connecting to Low-Speed	-	001
When connecting to Full-Speed	-	010
When connecting to Hi-Speed	-	011

2.5.14.1 Selecting the Host Controller function

Refer to 2.5.9.1.

2.5.14.2 Selecting the Peripheral Controller function

The port cannot be used while selecting the Peripheral Controller function, so do not refer to the value of this bit.

Downloaded from Elcodis.com electronic components distributor

2.6 Test Mode

♦ Test Mode Register [TESTMODE] <Address: 0CH>

15	14	13	12	11	10	9	8	7	6	5	4	3	2	1	0
												UTST			
? ?	? ?	? ?	? ?	? ?	? ?	? ?	? ?	? ?	? ?	? ?	? ?	0 -	0 -	0 -	0 -

Bit	Name	Function	Software	Hardware	Remarks
15-4	Unassigned. Fix it to "0".				
3-0	UTST test mode	※ Refer to detailed description.	R/W	R	

Remarks
None

2.6.1 Test mode bit (UTST)

The controller writes the value to this bit to output the USB test signal during Hi-Speed operations. The test mode operations of the controller are given in Table 2.12.

Table 2.12 Test Mode Operations

Test mode	**UTST** bit settings	
	When the Peripheral Controller function is selected	When the Host Controller function is selected
Normal operations	0000	0000
Test_J	0001	1001
Test_K	0010	1010
Test_SE0_NAK	0011	1011
Test_Packet	0100	1100
Test_Force_Enable	-	1101
Reserved	0101-0111	1110-1111

Downloaded from Elcodis.com electronic components distributor

2.6.1.1 Selecting the Host Controller function

When the Host Controller function is selected, writing to the bit is possible after writing "DRPD=1" corresponding to the test target port from Port0 and Port1. This bit is the common register for Port0 and Port1. The controller outputs the wave for the port where "DRPD=1" and "UACT=1" are written. When the Host Controller function is selected, the controller stops Hi-Speed operations for Port0 and Port1 by writing to the bit.

Procedure to set the **UTST** bit in HOST mode is below:

(1) Hardware reset
(2) Clock activation (write to XTAL, wait until "XCKE=1" changes to "SCKE=1")
(3) "DCFM=1" and "DPRD=1" (not necessary to write "HSE=1")
(4) "USBE=1"
(5) Write the value corresponding to the test contents in the **UTST** bit.
(6) Write "1" to the **UACT** bit of the port to be tested

Procedure to modify the **UTST** bit in HOST mode is below:

(1) (In the status of above-mentioned (8)) "UACT=0" and "USBE=0"
(2) "USBE=1"
(3) Write the value corresponding to the test contents in the **UTST** bit.
(4) Write "1" to the **UACT** bit of the port to be tested

When writing "Test_SE0_NAK" ("1011"), the controller does not output the SOF packet related to the port for which "UACT=1" was written.

When writing "Test_Force_Enable" ("1101"), the controller outputs the SOF packet related to the port for which "UACT=1" is written. The controller does not control the hardware associated with the detection when the mode is set, irrespective of detecting a Hi-Speed disconnection (detecting **DTCH** interrupt).

When selecting the Host Controller function, set all pipe **PID** bits to "NAK" if writing to the **UTST** bit.

After setting the test mode, reset the hardware when using normal USB communication.

2.6.1.2 Selecting the Peripheral Controller function

When the Peripheral Controller function is selected, write this bit according to the set feature request from the USB Host during Hi-Speed communication.

The controller does not move to suspend status if "0001" ~ "0100" is written to the bit when the Peripheral Controller function is selected.

To perform normal USB communications after the test mode is set, execute a hardware reset first.

Downloaded from Elcodis.com electronic components distributor

2.7 Bus Interface Control

♦ Data pin configuration register [PINCFG] <Address: 0EH>

15	14	13	12	11	10	9	8	7	6	5	4	3	2	1	0
LDRV															INTA
0 -	? ?	? ?	? ?	? ?	? ?	? ?	? ?	? ?	? ?	? ?	? ?	? ?	? ?	? ?	0 -

Bit	Name	Function	Software	Hardware	Remarks
15	LDRV Output pin drive current control	0: When VIF=1.6-2.0V 1: When VIF=2.7-3.6V	R/W	R	
14-1	Unassigned. Fix to "0".				
0	INTA INT_N active settings	Sets active of interrupt output from INT_N pin. 0: Low active 1: High active	R/W	R	

Remarks

2.7.1 Output pin drive current control bit (LDRV)

For this bit, write the value that matches the VIF power supply. The following are the output pins to be controlled using the drive current according to this bit: **SD7-0**, **D15-0**, **INT_N**, **DREQx_N**, **DENDx_N** and **SOF_N** pins.

Write to this bit after resetting the hardware and do not modify it during controller operations.

2.7.2 INT_N active setting bit (INTA)

Set the active (low/high) for interrupt output from INT_N that matches the interrupt input specifications of the CPU for control.

Write to this bit after resetting the hardware, and do not modify it during controller operations.

Downloaded from Elcodis.com electronic components distributor

The **DMA0CFG** register is for the DMA0 interface input/output pin and to control the D0FIFO port. The **DMA1CFG** register is for the DMA1 interface input/output pin and to control the D1FIFO port.

♦ DMA0 pin configuration register [DMA0CFG] <Address: 10H>
♦ DMA1 pin configuration register [DMA1CFG] <Address: 12H>

15	14	13	12	11	10	9	8	7	6	5	4	3	2	1	0
	DREQA	BURST			DACKA	DFORM			DENDA	PKTM	DENDE		OBUS		
? ?	0 -	0 -	? ?	? ?	0 -	0 -	0 -	0 -	0 -	0 -	0 -	? ?	0 -	? ?	? ?

Bit	Name	Function	Software	Hardware	Remarks
15	Unassigned. Fix to "0".				
14	DREQA DREQx_N signal polarity selection	Indicates the active of the DREQx_N pin. 0: Low active 1: High active	R/W	R	
13	BURST Burst mode	For DxFIFO, specifies whether to access by cycle steal transfer or by burst transfer. 0: Cycle steal transfer 1: Burst transfer	R/W	R	
12-11	Unassigned. Fix to "0".				
10	DACKA DACKx_N signal polarity selection	Specifies active of the DACKx_N pin. 0: Low active 1: High active	R/W	R	
9-7	DFORM DMA transfer signal selection	Specifies the control signal while accessing the FIFO buffer by DMA. 000: Use address signal+RD_N/WRx_N signal (CPU bus) 010: Use DACKx_N+RD_N/WRx_N signal (CPU bus) 011: Use DACKx_N signal only (CPU bus) 100: Use DACKx_N signal (SPLIT bus) 001, 101, 110 and 111: Reserved	R/W	R	
6	DENDA DENDx_N signal polarity selection	Specifies active of DENDx_N pin 0: Low active 1: High active	R/W	R	
5	PKTM DEND output packet mode	Specifies DEND output timing. 0: Assert DENDx_N signal in the transfer unit 1: Assert DENDx_N signal for every data transfer of the given buffer size	R/W	R	
4	DENDE DENDx_N signal enabled	Enables the input/output of DENDx_N signal. 0: DENDx_N signal disabled (Hi-z output) 1: DENDx_N signal enabled	R/W	R	
3	Unassigned. Fix to "0".				
2	OBUS OBUS operations disabled	Disables the OBUS operations. 0: OBUS mode enabled 1: OBUS mode disabled	R/W	R	
1-0	Unassigned. Fix to "0".				

Remarks
None

Downloaded from Elcodis.com electronic components distributor

2.7.3 DMA signal control

If transferring data using the DMA interface, use the **DMAxCFG** register's **BURST** bit, **PKTM** bit, **DENDE** bit, and **OBUS** bit to select the DMA interface operation (assert/negate of **DREQx_N** /**DENDx_N** signal and DMA transfer mode settings) that is configured to the user system. The DMA signal is valid for access to the FIFO buffer assigned to the pipe selected by the **DxFIFOSEL** register **CURPIPE** bit (to be mentioned later). When the status of the pipe FIFO buffer changes to buffer ready (**BRDY**) status, this controller asserts the **DREQx_N** signal if "DREQE=1".

2.7.4 DREQx_N signal polarity selection bit (DREQA)

Set active of DREQx_N pin in this bit.

For the FIFO port, write to this bit when "CURPIPE=000".

2.7.5 Burst mode bit (BURST)

When the DMA controller executes a cycle steal transfer for DxFIFO, write "0" to this bit. The controller negates a DREQx_N signal for access to one word or one byte.

When the DMA controller executes a burst transfer for DxFIFO, write "1" to this bit. The controller negates the DREQx_N signal for accessing the last one word or one byte of FIFO buffer.

Do not modify the bit during pipe communication operations.

2.7.6 DACKx_N signal polarity selection bit (DACKA)

In this bit, set active the DACKx_N pin.

For the FIFO port, write to this bit when "CURPIPE=000".

2.7.7 DMA transfer signal selection bit (DFORM)

In this bit, set the control signal while accessing the FIFO buffer with the DMA controller.

For the FIFO port, write to this bit when "CURPIPE=000"

2.7.8 DENDx_N signal polarity selection bit (DENDA)

In this bit, set active the DENDx_N pin.

For the FIFO port, write to this bit when "CURPIPE=000".

2.7.9 DEND output packet mode bit (PKTM)

Write the DEND output timing in this bit.

When "0" is written to this bit, the controller asserts the DENDx_N signal when any of the following conditions are fulfilled:
(1) During the last read access while reading the short packet data
(2) During the last read access while reading the data completed at the transaction counter (**TRNCNT**)
(3) If a zero-length packet is received when the FIFO buffer is empty

When "1" is written to this bit, the controller asserts a DENDx_N output for every data transfer of the given FIFO buffer size.

For the FIFO port, write to this bit when "CURPIPE=000".

Downloaded from Elcodis.com electronic components distributor

2.7.10 Input/Output enabled bit of the DENDx_N signal (DENDE)

Set I/O enabled/disabled for the DENDx_N pin in this bit.

For the FIFO port, write to this bit when "CURPIPE=000".

2.7.11 OBUS operation disabled bit (OBUS)

In this bit, write OBUS operations to be enabled/disabled.

When "0" is written to this bit, theSD7-0 of the split bus and DEND is always input/output enabled".
When "1" is written to this bit, the SD7-0 of the split bus and DENDx_N are are enabled only when DACKx_N is active.

While commonly using D0FIFO and D1FIFO in the split bus, write "1" to all the **OBUS** bits.

Downloaded from Elcodis.com electronic components distributor

2.8 FIFO Port

♦ CFIFO Port register [CFIFO] <Address: 14H>
♦ D0FIFO Port register [D0FIFO] <Address: 18H>
♦ D1FIFO Port register [D1FIFO] <Address: 1CH>

15	14	13	12	11	10	9	8	7	6	5	4	3	2	1	0
FIFOPORT															
0 -	0 -	0 -	0 -	0 -	0 -	0 -	0 -	0 -	0 -	0 -	0 -	0 -	0 -	0 -	0 -

Bit	Name	Function	Software	Hardware	Remarks
15-0	FIFOPORT FIFO port	Reads the received data from the FIFO buffer by accessing this bit, or writes the being transmitted data to the FIFO buffer.	R/W	R/W	

Remarks
None

2.8.1 FIFO port control

The Rx/Tx buffer memory of this controller is made up of a FIFO structure (FIFO buffer). Use the FIFO port register to access the FIFO buffer. The CFIFO port, D0FIFO port and D1FIFO port are the types of FIFO ports. Each FIFO port consists of port registers (**CFIFO**, **D0FIFO** and **D1FIFO**) that read or write the data from or to the FIFO buffer, registers (**CFIFOSEL**, **D0FIFOSEL** and **D1FIFOSEL**) that select the pipes assigned to FIFO port, and control registers (**CFIFOCTR, D0FIFOCTR** and **D1FIFOCTR**).

The features of each FIFO port are as follows:

(1) Access the FIFO buffer for DCP using the CFIFO port.
(2) The FIFO buffer access using the DMA transfer can be done through the DxFIFO port.
(3) DxFIFO port access by the CPU is also possible.
(4) While using functions specific to the FIFO port, the pipe number (selected pipe) to be written to the **CURPIPE** bit cannot be modified (signal input/output to the pin related to DMA, etc.).
(5) Registers containing the FIFO port do not affect the other FIFO ports.
(6) Do not assign the same pipe to separate FIFO ports.
(7) In the FIFO buffer status, there are two types of access rights: one assigned to the CPU, and the other to SIE. Access from the CPU is not possible when SIE has the rights to access the buffer memory.

Downloaded from Elcodis.com electronic components distributor

2.8.2 **FIFO port bit** (CFIFO, D0FIFO and D1FIFO)

The controller accesses the FIFO buffer assigned to the pipe number written to the **CURPIPE** bit of various selected registers (**CFIFOSEL, D0FIFOSEL** or **D1FIFOSEL**).

Access to this register is possible only when the **FRDY** bit of each control register (**CFIFOCTR**, **D0FIFOCTR** or **D1FIFOCTR**) shows "1" (or while this controller asserts DREQx_N). The valid bits of this register differ according to the setup value of the **MBW** and **BIGEND** bits. The valid bits are shown in Table 2.13.

Table 2.13 FIFO Port Valid Bits

MBW SetupValue	BIGEND Setup Value	b15-b8	b7-b0
0	0	Invalid	N+0 byte
0	1	N+0 byte	Invalid
1	0	N+1 byte	N+0 byte
1	1	N+0 byte	N+1 byte

If writing "**MBW** =0", the N+0 byte as shown in Table 2.13 can be accessed. During read, access the 16-bit width for addresses 1H, 18 H and 1AH and use them as 8-bit data on N+0 byte as shown in Table 2.13. During write, access the 16-bit width for addresses 14H, 18H and 1AH (access by asserting both WR0_N and WR1_N. In this case, the controller ignores the N+1 byte as shown in Table 2.13), or access the 8-bit width for addresses 14H, 18H and 1AH (assert only WR0_N).

If writing "**MBW**=1", the N+0 byte shown in Table 2.13 can be accessed. During read, access the 16-bit width for addresses 14H, 18H and 1AH. During write, access the 16-bit width for addresses 14H, 18H and 1AH (access by asserting WR0_N and WR1_N).

Do not access the address for 15H, 19H and 1BH.

Downloaded from Elcodis.com electronic components distributor

♦ FIFO port selection register [CFIFOSEL] <Address: 20H>

15	14	13	12	11	10	9	8	7	6	5	4	3	2	1	0
RCNT	REW				MBW		BIGEND			ISEL			CURPIPE		
0 -	0 -	? ?	? ?	? ?	0 -	? ?	0 -	? ?	? ?	0 -	? ?	? ?	0 -	0 -	0 -

Bit	Name	Function	Software	Hardware	Remarks
15	RCNT Read count mode	Specify read mode of CFIFOCTR DTLN. 0: DTLN bit clear by read of all the data received 1: DTLN bit count down for read of all the received data	R/W	R	
14	REW Buffer pointer rewind	Specify "1" while rewinding the buffer pointer. 0: Do not rewind the buffer pointer 1: Rewind buffer pointer	R(0)/W	R/W(0)	
13-11	Unassigned. Fix to "0".				
10	MBW CFIFO port access bit width	Specify the CFIFO port access bit width. 0: 8-bit width 1: 16-bit width	R/W	R	
9	Unassigned. Fix to "0".				
8	BIGEND FIFO port endian control	Specify the CFIFO port byte endian. 0: Little endian 1: Big endian	R/W	R	
7-6	Unassigned. Fix to "0".				
5	ISEL Access direction of the FIFO port when DCP is selected	Specify access direction of the FIFO port when DCP is selected in CURPIPE bit. 0: This selects read from the buffer memory 1: This selects write to the buffer memory	R/W	R	
4-3	Unassigned. Fix to "0".				
2-0	CURPIPE FIFO port access pipe specification	Specify the pipe number to access the CFIFO port. 0000: DCP 0001: Pipe1 0010: Pipe2 1000: Pipe8 1001: Pipe9	R/W	R	

Remarks
None

Downloaded from Elcodis.com electronic components distributor

2.8.3 Read count mode (RCNT)

When "0" is written to this bit, if all reception data of the FIFO buffer assigned to the pipe specified in the **CURPIPE** bit is read (when the data is read on one side of a double buffer), the controller clears the **CFIFOCTR** register **DTLN** bit to "0".

When "1" is written to this bit, the controller counts the **CFIFOCTR** register **DTLN** bit whenever the data received from the FIFO buffer assigned to the specified bit is read.

2.8.4 Buffer pointer rewind (REW)

When the the specified pipe is receiving, if "1" is written to this bit during the FIFO buffer read, the initial data of the FIFO buffer can be read (for a double buffer, the initial data on one side can be read again during the read process). When the software writes "1" to this bit, the controller again writes "0" to this bit.

Do not modify the "REW=1" and **CURPIPE** bit settings at the same time. First confirm that "FRDY=1" and then write "REW=1".

Use the **BLCR** bit while rewriting the initial data of the FIFO buffer for the transmission pipe.

2.8.5 CFIFO Port access bit width (MBW)

In this bit, set the CFIFO port access bit width.

When the pipe specified in the **CURPIPE** bit is receiving, if read is started after writing "1" to this bit, modify the **MBW** bit from "1" to "0" only after all the data is read. When the **DTLN** bit is an odd number, write "MBW=0" and read with the variable having an 8-bit length, or read with a 16-bit maintaining "MBW=1", delete the excess byte, and then read the last byte.

When the specified pipe is receiving, set the **CURPIPE** bit and **MBW** bit simultaneously.

When the the specified pipe is transmitting, to start writing the data having an odd number of bytes by writing "1" to this bit, write "MBW=0" and write with the variable having a 16-bit length (refer to 2.8.2 for the data to be written), or write with the variable having an 8-bit length maintaining "MBW=1", and then write the last byte (write with the WR0_N strobe if "BIGEND=0", and with the WR1_N strobe if "BIGEND=1").

2.8.6 Control bit of CFIFO port byte endian (BIGEND)

In this bit, write the CFIFO port byte endian. Refer to 2.8.2 for details.

2.8.7 FIFO port access direction specification bit when selecting DCP (ISEL)

To change this bit when the specified pipe is DCP, first write the data to this bit and then read it. Proceed to the next process after checking if the written values match with the read values.

When the settings of this bit are modified during access to the FIFO buffer, access up to then is saved. Access to the buffer can be continued after rewriting the settings.

Write to this bit and the **CURPIPE** bit simultaneously.

2.8.8 FIFO port access byte specification bit (CURPIPE)

Write the pipe number for the data to be read or written through the CFIFO port. When modifying this bit, first write the data and then read it. Check that the written values and the read values match, and then proceed to the next process.

Do not write to the same pipe to **CURPIPE** of **CFIFOSEL**, **D0FIFOSEL**, and **D1FIFOSEL** registers.

When the settings of this bit are modified during access to the FIFO buffer, access up to then is saved. Access to the buffer can be continued after rewriting the settings.

Downloaded from Elcodis.com electronic components distributor

♦ D0FIFO port selection register [D0FIFOSEL] <Address: 28H>
♦ D1FIFO port selection register [D1FIFOSEL] <Address: 2CH>

15	14	13	12	11	10	9	8	7	6	5	4	3	2	1	0
RCNT	REW	DCLRM	DREQE		MBW		BIGEND						CURPIPE		
0 -	0 -	0 -	0 -	? ?	0 -	? ?	0 -	? ?	? ?	? ?	? ?	? ?	0 -	0 -	0 -

Bit	Name	Function	Software	Hardware	Remarks
15	RCNT Read count mode	Specify the read mode of Dx_FIFOCTR DTLN. 0: The DTLN bit is cleared when all the reception data has been read 1: The DTLN bit is decremented when the reception data is read	R/W	R	
14	REW Buffer pointer rewind	Specify "1" to rewind the buffer pointer. 0: Invalid 1: The buffer pointer is rewound	R(0)/W	R/W(0)	
13	DCLRM This is the auto buffer memory clear mode accessed after the data for the specified pipe has been read.	Specify whether auto buffer memory clear is disabled/enabled after the data for the specified pipe has been read. 0: Auto buffer clear mode is disabled 1: Auto buffer clear mode is enabled	R/W	R	
12	DREQE DREQ signal output enabled	Specify whether the DREQ signal is disabled/enabled. 0: Output is disabled 1: Output is enabled	R/W	R	
11	Unassigned. Fix to "0".				
10	MBW FIFO port access bit width	Specify the FIFO port access bit width. 0: 8-bit width 1: 16-bit width	R/W	R	
9	Nothing is assigned. Fix to "0".				
8	BIGEND FIFO port endian control	Specify the byte endian of each FIFO port. 0: Little endian 1: Big endian	R/W	R	
7-4	Unassigned. Fix to "0".				
3-0	CURPIPE FIFO port access pipe specification	0000: No specification 0001: Pipe1 0010: Pipe2 1000: Pipe8 1001: Pipe9	R/W	R	

Remarks
None

2.8.9 Read count mode (RCNT)

When "1" is written to this bit, if all reception data of the FIFO buffer assigned to the pipe specified in the **CURPIPE** bit is read (for a double buffer, when the data on one side is read), the controller clears the **DxFIFOCTR** register **DTLN** bit to "0".

When "1" is written to this bit, the controller counts the **DxFIFOCTR** register **DTLN** bits each time during the reception data read of the FIFO buffer assigned to the specified pipe.

Write "0" to this bit to access **DxFIFO** by writing "1" to the **BFRE** bit.

Downloaded from Elcodis.com electronic components distributor

2.8.10 Buffer pointer rewind (REW)

When the specified pipe is receiving, if "1" is written to this bit during the FIFO buffer read, the read can be started from the initial data of the FIFO buffer (for a double buffer, during the read process, the initial data on one side can be read again). When the software writes "1" to this bit, the controller again writes "0" to this bit.

Do not write "REW=1" and modify the **CURPIPE** bit. First check "FRDY=1" and then write "REW=1". While accessing **DxFIFO** by writing "1" to the **BFRE** bit, do not write "1" to this bit when the short packet data is read.

Use the **BLCR** bit while rewriting the initial data of the FIFO buffer for the transmission pipe.

2.8.11 Auto FIFO buffer clear disabled/enabled bit (DCLRM)

After reading the specified pipe data, set disabled/enabled for the auto FIFO buffer clear. When "1" is written to this bit, the controller executes a "BCLR=1" process of the FIFO buffer if a zero-length packet is received when the FIFO buffer assigned to the specified pipe is empty, or when the short packet reception data is read if writing "BFRE=1".

If "BRDYM=1" is written when using this controller, make sure to write "0" to this bit.

2.8.12 DREQx_N output disabled/enabled bit (DREQE)

Write this bit so that the DxREQ_N signal output can be disabled/enabled.

When the **DxREQ_N** signal output is enabled, write "1" to this bit after writing to the **CURPIPE** bit. Write "0" to this bit and then modify the **CURPIPE** bit.

2.8.13 DxFIFO port access bit width (MBW)

Write the DxFIFO port access bit width in this bit. Refer to 2.8.5 for details.

2.8.14 Control bit of DxFIFO port byte endian (BIGEND)

Write the DxFIFO port byte endian in this bit. Refer to 2.8.2 for details.

2.8.15 FIFO port access pipe specification bit (CURPIPE)

Write the pipe number for the data to be read or written through the DxFIFO port.

To modify this bit, first write the data to this bit and then read it. Check if the write value matches the read value and then proceed to the next process.

Do not write the same pipe to the **CFIFOSEL**, **D0FIFOSEL**, and **D1FIFOSEL** registers' **CURPIPE**.

When this bit is modified during access to the FIFO buffer, access up to then is saved. Access to the buffer can be continued after rewriting.

Downloaded from Elcodis.com electronic components distributor

♦ CFIFO port control register [CFIFOCTR] <Address: 22H>
♦ D0FIFO port control register [D0FIFOCTR] <Address: 2AH>
♦ D1FIFO port control register [D1FIFOCTR] <Address: 2EH>

15	14	13	12	11	10	9	8	7	6	5	4	3	2	1	0
BVAL	BCLR	FRDY		DTLN											
0 -	0 -	0 -	? ?	0 -	0 -	0 -	0 -	0 -	0 -	0 -	0 -	0 -	0 -	0 -	0 -

Bit	Name	Function	Software	Hardware	Remarks
15	BVAL Buffer memory valid flag	Specify "1" when write of the FIFO buffer ends on the CPU side of pipe specified in CURPIPE. 0: Invalid 1: Writing ended	R/W(1)	R/W	
14	BCLR CPU buffer clear	Specify "1" to clear the FIFO buffer on the CPU side of the pipe. 0: Invalid 1: Clears the CPU buffer memory	R(0)/W(1)	R/W(0)	
13	FRDY FIFO port ready	Indicates whether the FIFO port can be accessed. 0: FIFO port access disabled 1: FIFO port access enabled	R	W	
12	Unassigned. Fix to "0".				
11-0	DTLN Reception data length	Displays reception data length of FIFO buffer for corresponding PIPE.	R	W	

Remarks
None

2.8.16 Buffer memory valid flag (BVAL)

When the pipe specified in the **CURPIPE** bit is transmitting, write "1" to this bit in the cases below. The controller writes the FIFO buffer from the CPU side to the SIE side to make transmission possible.
(1) To transmit the short packet, write "1" to this bit after the data is written.
(2) To transmit a zero-Length packet, write "1" to this bit before writing the data to FIFO.
(3) For the pipe in continuous transfer mode, write "1" to this bit after writing the maximum packet size in multiples of natural integers and data less than the buffer size.

If the data of the maximum packet size is written for the pipe in continuous transfer mode, the controller writes "1" to this bit, sets the CPU FIFO buffer to the SIE side, and changes to transmission possible status.

When the controller indicates "FRDY=1", write "1" to this bit.

When the specified pipe is receiving, do not write "1" to this bit.

Downloaded from Elcodis.com electronic components distributor

2.8.17 CPU buffer clear bit (BCLR)

If "1" is written to this bit, the controller clears the FIFO buffer on the CPU side from the FIFO buffers assigned to the specified pipe.

When the setting of the FIFO buffer assigned to the specified pipe is a double buffer, the controller clears the FIFO buffer only on one side, though the buffers on both sides can be read.

When the specified pipe is DCP, the controller clears the FIFO buffer when "BCLR=1", irrespective of the CPU or SIE side. To clear the buffer on the SIE side, write "BCLR=1" after writing "NAK" to the **PID** bit.

When the specified pipe is transmitting, if "1" is written simultaneously to the **BVAL** and **BCLR** bits, the controller clears the data written previously and changes the status of the zero-length packet to transmission possible.

If the specified pipe is not DCP, write "1" to this bit when the controller sets "FRDY=1".

2.8.18 FIFO port ready bit (FRDY)

In this bit, the controller shows if access is possible to the FIFO port from the CPU (DMAC).

In the following cases, the controller sets "FRDY=1", but cannot read the data from the FIFO port since the data is not available. In these cases, write "BCLR=1", clear the FIFO buffer, and then change the status to Data Send/Receive.
(1) If a zero-length packet is received when the FIFO buffer assigned to the specified pipe is empty.
(2) If "BFRE=1" is written, when the short packet is received and the data is read.

2.8.19 Reception data length bit (DTLN)

The controller sets the reception data length in this bit. The value of this bit changes according to the setup value of the **RCNT** bit during the FIFO buffer read.

(1) When "RCNT=0":
The controller sets the reception data length in this bit until the CPU (DMAC) reads all the reception data on one side of the FIFO buffer. When "BFRE=1", the controller holds the reception data length until "BCLR=1", although the data is read.

(2) When "RCNT=1":
The controller counts the **DTLN** bit display during each data read (counts down by -1 when "MBW=0", and by -2 when "MBW=1").

When the data on one side of the FIFO buffer is read, the controller sets "DTLN=0". However, when the double buffer is set, and when data is received in the FIFO buffer on one side before reading the reception data on other FIFO buffer, the reception data on one side is set in the DTLN bit when read on the first side is being completed.

When "RCNT=1", while reading the value of this bit during FIFO buffer read, the controller sets the updated value of this bit up to150ns after the read cycle of the FIFO port.

Downloaded from Elcodis.com electronic components distributor

2.9 Interrupts Enabled

♦ Interrupt enabled register 0 [INTENB0] <Address: 30H>

15	14	13	12	11	10	9	8	7	6	5	4	3	2	1	0
VBSE	RSME	SOFE	DVSE	CTRE	BEMPE	NRDYE	BRDYE								
0	0	0	0	0	0	0	0	?	?	?	?	?	?	?	?
-	-	-	-	-	-	-	-	?	?	?	?	?	?	?	?

Bit	Name	Function	Software	Hardware	Remarks
15	VBSE VBUS interrupts enabled	Specify INT_N disabled/enabled while detecting VBINT interrupts. 0: Interrupt output disabled 1: Interrupt output enabled	R/W	R	
14	RSME Resume interrupts enabled	Specify INT_N assert disabled/enabled while detecting RESM interrupt. 0: Interrupt output disabled 1: Interrupt output enabled	R/W	R	P (Write to "0" when H)
13	SOFE Frame number update interrupts enabled	Specify INT_N assert disabled/enabled while detecting SOF interrupt. 0: Interrupt output disabled 1: Interrupt output enabled	R/W	R	
12	DVSE Device state transition interrupts enabled	Specify INT_N assert disabled/enabled while detecting DVST interrupt. 0: Interrupt output disabled 1: Interrupt output enabled	R/W	R	P (Write to "0" when H)
11	CTRE Control transfer stage transition interrupts enabled	Specify INT_N assert disabled/enabled while detecting CTRT interrupt. 0: Interrupt output disabled 1: Interrupt output enabled	R/W	R	P (Write to "0" when H)
10	BEMPE Buffer empty interrupts enabled	Specify INT_N assert disabled/enabled while detecting BEMP interrupt. 0: Interrupt output disabled 1: Interrupt output enabled	R/W	R	
9	NRDYE Buffer not ready response interrupts enabled	Specify INT_N assert disabled/enabled while detecting NRDY interrupt. 0: Interrupt output disabled 1: Interrupt output enabled	R/W	R	
8	BRDYE Buffer ready interrupts enabled	Specify INT_N assert disabled/enabled while detecting BRDY interrupt. 0: Interrupt output disabled 1: Interrupt output enabled	R/W	R	
7-0	Unassigned. Fix to "0".				

Remarks
*** RESM**, **DVSE** and **CTRE** bits can be written to only when the Peripheral Controller function is selected. Do not enable when the Host Controller function is selected.

Downloaded from Elcodis.com electronic components distributor

♦ Interrupt enabled register 1 [INTENB1] <Address: 32H>

15	14	13	12	11	10	9	8	7	6	5	4	3	2	1	0
OVRCRE	BCHGE		DTCHE	ATTCHE					EOFERRE	SIGNE	SACKE				
0 -	0 -	? ?	0 -	0 -	? ?	? ?	? ?	? ?	0 -	0 -	0 -	? ?	? ?	? ?	? ?

Bit	Name	Function	Software	Hardware	Remarks
15	OVRCRE Port0 OVRCR interrupt enabled	Specify INT_N assert disabled/enabled while detecting Port0 OVRCR interrupt. 0: Interrupt output disabled 1: Interrupt output enabled	R/W	R	H (Write to "0" when P)
14	BCHGE Port0 USB bus change interrupt enabled	Specify INT_N assert disabled/enabled while detecting Port0 BCHG interrupt. 0: Interrupt output disabled 1: Interrupt output enabled	R/W	R	H (Write to "0" when P)
13	Unassigned. Fix to "0".				
12	DTCHE Port0 detach detect interrupt enabled	Specify INT_N assert disabled/enabled while detecting Port0 DTCH interrupt (enabled only if HOST). 0: Interrupt output disabled 1: Interrupt output enabled	R/W	R	H (Write to "0" when P)
11	ATTCHE Port0 attach detect interrupt enabled	Specify INT_N assert disabled/enabled while detecting Port0 ATTCH interrupt. 0: Interrupt output disabled 1: Interrupt output enabled	R/W	R	H (Write to "0" when P)
10-7	Unassigned. Fix to "0".				
6	EOFERRE Port0 EOF error detect interrupt enabled	Specify INT_N assert disabled/enabled while detecting Port0 EOFERR interrupt. 0: Interrupt output disabled 1: Interrupt output enabled	R/W	R	H (Write to "0" when P)"
5	SIGNE Port0 Setup transaction error interrupt enabled	Specify INT_N assert disabled/enabled while detecting Port0 SIGN interrupt. 0: Interrupt output disabled 1: Interrupt output enabled	R/W	R	H (Write to "0" when P)"
4	SACKE Port0 Setup transaction complete interrupt enabled	Specify INT_N assert disabled/enabled while detecting Port0 SACK interrupt. 0: Interrupt output disabled 1: Interrupt output enabled	R/W	R	H (Write to "0" when P)"
3-0	Unassigned. Fix to "0".				

Remarks

* The interrupt enabled by the **INTENB1** register except the **OVRCRE** bit can be written to only when the Host Controller function is selected. Do not enable it when the Peripheral Controller function is selected.
* The interrupt enabled by the **OVRCRE** bit can be written to only when the Host Controller function is selected or operate the controller as an OTG A-Device.

Downloaded from Elcodis.com electronic components distributor

♦ Interrupt enabled register 2 [INTENB2] <Address: 34H>

15	14	13	12	11	10	9	8	7	6	5	4	3	2	1	0
OVRCRE	BCHGE		DTCHE	ATTCHE					EOFERRE						
0 -	0 -	? ?	0 -	0 -	? ?	? ?	? ?	? ?	0 -	? ?	? ?	? ?	? ?	? ?	? ?

Bit	Name	Function	Software	Hardware	Remarks
15	OVRCRE Port1 OVRCR interrupt enabled	Specify INT_N assert disabled/enabled while detecting Port1 OVRCR interrupt. 0: Interrupt output disabled 1: Interrupt output enabled	R/W	R	H (Write to "0" when P)"
14	BCHGE Port1 USB bus change interrupt enabled	Specify INT_N assert disabled/enabled while detecting Port1 BCHG interrupt. 0: Interrupt output disabled 1: Interrupt output enabled	R/W	R	H (Write to "0" when P)"
13	Unassigned. Fix to "0".				
12	DTCHE Port1 detach detect interrupt enabled	Specify INT_N assert disabled/enabled while detecting Port1 DTCH interrupt (enabled only if HOST). 0: Interrupt output disabled 1: Interrupt output enabled	R/W	R	H (Write to "0" when P)"
11	ATTCHE Port1 attach detect interrupt enabled	Specify INT_N assert disabled/enabled while detecting Port1 ATTCH interrupt. 0: Interrupt output disabled 1: Interrupt output enabled	R/W	R	H (Write to "0" when P)"
10-7	Unassigned. Fix to "0".				
6	EOFERRE Port1 EOF error detect interrupt enabled	Specify INT_N assert disabled/enabled while detecting Port1 EOFERR interrupt. 0: Interrupt output disabled 1: Interrupt output enabled	R/W	R	H (Write to "0" when P)"
5-0	Unassigned. Fix to "0".				

Remarks
* The interrupt enabled by the **INTENB2** register can be written to only when the Host Controller function is selected. Do not enable it when the Peripheral Controller function is selected.

2.9.1 Interrupt enabled registers 0, 1, 2 (INTENB0, INTENB1, INTENB2)

When the controller detects the interrupt corresponding to the bit for which the software has written "1" to the register, the controller asserts an interrupt from the INT_N pin.

The controller sets "1" to this status bit corresponding to the **INTSTS0, INTSTS1** and **INTSTS2** registers when the detection conditions of each interrupt factor are satisfied, irrespective of the setup value of the register (interrupt notification disabled/enabled).

When the status bit of the **INTSTS0, INTSTS1** and **INTSTS2** registers corresponding to each interrupt factor are set to "1", if the software modifies the interrupt enabled bit corresponding to the register from "0" to "1", the controller asserts the interrupt from the INT_N pin.

Downloaded from Elcodis.com electronic components distributor

♦ BRDY interrupt enabled register [BRDYENB] <Address: 36H>

15	14	13	12	11	10	9	8	7	6	5	4	3	2	1	0
						PIPEBRDYE									
? ?	? ?	? ?	? ?	? ?	? ?	0 -	0 -	0 -	0 -	0 -	0 -	0 -	0 -	0 -	0 -

Bit	Name	Function	Software	Hardware	Remarks
15-10	Unassigned. Fix to "0".				
9-0	PIPEBRDYE Interrupts for each pipe are enabled	Specify whether it is possible to write "1" to the BRDY bit while detecting the BRDY bit of each pipe. 0: Interrupt output disabled 1: Interrupt output enabled	R/W	R	

Remarks
* The bit number corresponds to the pipe number.

2.9.2 BRDY interrupt enabled bit of each pipe (PIPEBRDYE)

When the controller detects the **BRDY** interrupt for the pipe for which the software has written "1" in this bit, it sets "1" to the **BRDYSTS** register **PIPEBRDY** bit and to the **INTSTS0** register **BRDY** bit, and asserts an interrupt from the **INT_N** pin.

When at least one bit from the **BRDYSTS** register **PIPEBRDY** bit sets "1", if the software modifies the register interrupt enabled bit from "0" to "1", the controller asserts an interrupt from the **INT_N** pin.

♦ NRDY interrupt enabled register [NRDYENB] <Address: 38H>

15	14	13	12	11	10	9	8	7	6	5	4	3	2	1	0
						PIPENRDYE									
? ?	? ?	? ?	? ?	? ?	? ?	0 -	0 -	0 -	0 -	0 -	0 -	0 -	0 -	0 -	0 -

Bit	Name	Function	Software	Hardware	Remarks
15-10	Unassigned. Fix to "0".				
9-0	PIPENRDYE NRDY interrupt for each pipe is enabled	Specify whether it is possible to write "1" to the NRDY bit while detecting the BRDY interrupt of each pipe. 0: Interrupt output disabled 1: Interrupt output enabled	R/W	R	

Remarks
* Bit number corresponds to the pipe number.

2.9.3 NRDY interrupt enabled bit of each pipe (PIPENRDYE)

When the controller detects the **NRDY** interrupt for the pipe for which the software has written "1" to this bit, it sets "1" to the **NRDYSTS** register **PIPEBRDY** bit and to the **INTSTS0** register **NRDY** bit, and asserts an interrupt from the **INT_N** pin.

When at least one bit from the **NRDYSTS** register **PIPENRDY** bit sets "1", if the software modifies the interrupt enabled bit of the register from "0" to "1", the controller asserts an interrupt from the **INT_N** pin.

Downloaded from Elcodis.com electronic components distributor

♦ BEMP interrupt enabled register [BEMPENB] <Address: 3AH>

15	14	13	12	11	10	9	8	7	6	5	4	3	2	1	0
						PIPEBEMPE									
? ?	? ?	? ?	? ?	? ?	? ?	0 -	0 -	0 -	0 -	0 -	0 -	0 -	0 -	0 -	0 -

Bit	Name	Function	Software	Hardware	Remarks
15-10	Unassigned. Fix to "0".				
9-0	PIPEBEMPE BEMP interrupt for each pipe is enabled	Specify whether it is possible to write "1" to the BEMP bit while detecting the BEMP interrupt of each pipe. 0: Interrupt output disabled 1: Interrupt output enabled	R/W	R	

Remarks
* Bit number corresponds to the pipe number.

2.9.4 BEMP interrupt enabled bit of each pipe (PIPEBEMPE)

When the controller detects the **BEMP** interrupt for the pipe for which the software has written "1" to this bit, it sets "1" to the **PIPEBEMP** register **PIPEBEMP** bit and to the **INTSTS0** register **BEMP** bit, and asserts an interrupt from the **INT_N** pin.

When at least one bit from the **BEMPSTS** register **PIPEBEMP** bit sets "1", if the software modifies the register interrupt enabled bit from "0" to "1", the controller asserts an interrupt from the **INT_N** pin.

Downloaded from Elcodis.com electronic components distributor

2.10 SOF Control Register

♦ SOF pin configuration register [SOFCFG] <Address: 3CH>

15	14	13	12	11	10	9	8	7	6	5	4	3	2	1	0
							TRNENSEL		BRDYM	INTL	EDGESTS	SOFM			
?	?	?	?	?	?	?	0	?	0	0	0	0	0	?	?
?	?	?	?	?	?	?	-	?	-	-	-	-	-	?	?

Bit	Name	Function	Software	Hardware	Remarks
15-9	Unassigned. Fix to "0".				
8	TRNENSEL Transaction validity switchover bit	This controller specifies the time period (transaction validity) for issuing the token within one frame for the port during Full-/Low-Speed communication. 0: Not compatible with Low-Speed 1: Compatible with Low-Speed	R/W	R	H (Write to "0" when P)
7	Unassigned. Fix to "0".				
6	BRDYM PIPEBRDY interrupt status clear timing setting	Specify the timing for clearing the PIPEBRDY interrupt status. 0: Software clears the status 1: Hardware clears the status by read operation of the FIFO buffer or by write operation to the FIFO buffer	R/W	R	
5	INTL Interrupt output sense setting	Specify interrupt output sense of the INT_N pin. 0: Edge sense 1: Level sense	R/W	R	
4	EDGESTS Interrupt edge process status	Interrupt edge process status is set. 0: Interrupt edge non-active 1: Interrupt edge active	R/W	R	
3-2	SOFM SOF pin settings	Select SOF pulse output mode. 00: SOF output disabled 01: SOF output in 1ms unit 10: µSOF output in 125µs unit 11: Reserved	R/W	R	
1-0	Unassigned. Fix to "0".				

Remarks

* Writing to the **TRNENSEL** bit is valid only when the Host Controller function is selected. The transaction validity of Hi-Speed is not affected, although the Host Controller function is selected. This bit is common for two ports.
* While writing "BRDYM=1", write "INTL=1" (level sense).
* While writing "INTL=0", clear interrupt status, confirm "EDGESTS=0" to stop the system clock (write "SCKE=0") and then write "SCKE=0".

Downloaded from Elcodis.com electronic components distributor

2.11 Interrupt Statuses

♦ Interrupt status register 0 [INTSTS0] <Address: 40H>

15	14	13	12	11	10	9	8	7	6	5	4	3	2	1	0
VBINT	RESM	SOFR	DVST	CTRT	BEMP	NRDY	BRDY	VBSTS	DVSQ			VALID	CTSQ		
0	0	0	0	0	0	0	0	?	0	0	0	0	0	0	0
-	-	-	1	-	-	-	-	-	0	0	1	-	-	-	-

Bit	Name	Function	Software	Hardware	Remarks
15	VBINT VBUS change detect interrupt status	VBUS change detection interrupt status is set. 0: VBUS interrupts not issued 1: VBUS interrupts issued	R/W(0)	W	
14	RESM Resume interrupt status	Resume detection interrupt status is set. 0: Resume interrupts not issued 1: Resume interrupts issued	R/W(0)	W	P (Read value invalid when H)
13	SOFR Frame number update interrupt status	Frame number refresh interrupt status is set. 0: SOF interrupts not issued 1: SOF interrupts issued	R/W(0)	W	
12	DVST Device state transition interrupt status	Device state transition interrupt status is set. Status 0: Device state transition interrupts not issued 1: Device state transition interrupts issued	R/W(0)	W	P (Read value invalid when H)
11	CTRT Control transfer stage transition interrupt status	Control transfer stage transition interrupt status is set. Status 0: Control transfer stage transition interrupts not issued 1: Control transfer stage transition interrupts issued	R/W(0)	W	P (Read value invalid when H)
10	BEMP BEMP interrupt status	BEMP interrupt status is set. 0: BEMP interrupts not issued 1: BEMP interrupts issued	R	W	
9	NRDY NRDY interrupt status	NRDY interrupt status is set. 0: NRDY interrupts not issued 1: NRDY interrupts issued	R	W	
8	BRDY BRDY interrupt status	BRDY interrupt status is set. 0: BRDY interrupts not issued 1: BRDY interrupts issued	R	W	
7	VBSTS VBUS input status	Input status of VBUS pin is set. 0: VBUS pin is "L" level 1: VBUS pin is "H" level	R	W	
6-4	DVSQ Device state	Device state is set. 000: Powered state 001: Default state 010: Address state 011: Configured state 1xx: Suspended state	R	W	P (Read value invalid when H)
3	VALID USB request reception	USB request reception detection valid/invalid is set. 0: Not detected 1: Setup packet reception	R/W(0)	W	P (Read value invalid when H)

Downloaded from Elcodis.com electronic components distributor

Bit	Name	Function	Software	Hardware	Remarks
2-0	CTSQ Control transfer stage	Control transfer stage is set. 000: Idle or Setup stage 001: Control read data stage 010: Control read status stage 011: Control write data stage 100: Control write status stage 101: Control write (no data) status stage 110: Control transfer sequence error 111: Reserved	R	W	P (Read value invalid when H)

Remarks
* To clear the status indicated by the **VBINT**, **RESM**, **SOFR**, **DVST** or **CTRT** bits, write "0" only for the bit to be cleared, and write "1" for other bits. Do not write "0" to the status bit set to "0".
* The controller detects the change in status indicated by the **VBINT** and **RESM** bits of this register, even while the clock is being stopped ("SCKE=0"), and notifies the interrupt if the corresponding interrupt is enabled. When the clock is enabled, clear the status using software.
* The statuses of the **RESM**, **DVST** and **CTRT** bits change only when the Peripheral Controller function is selected. When the Host Controller function is selected, write "0" to the corresponding interrupt enabled bit in order to disablethe the interrupt.
* The **DVSQ**, **VALID** and **CTRQ** bits are valid only when the Peripheral Controller function is selected.

2.11.1 VBUS conversion interrupt status bit (VBINT)

When the controller detects the change in the **VBUS** pin input value (from High to Low and from Low to High), "1" is written to this bit. The controller writes the input value of the **VBUS** pin to the **VBSTS** bit. When the **VBINT** interrupt occurs, use the software to execute a consistency check several times during the **VBSTS** bit read, and reject the chattering.

2.11.2 Resume interrupt status bit (RESM)

When writing to the Peripheral Controller function, the controller is in suspend status (DVSQ=1XX), and "1" is set to this bit when the DP pin falling edge is detected.

2.11.3 Frame number update interrupt status bit (SOFR)

The conditions when the controller sets "1" in this bit are below.

2.11.3.1 When the Host Controller function is set

This controller sets "1" for this bit in the condition where at least one of the UACT bits corresponding to Port0 or Port1 writes "1" by the software, during the timing when the frame number is updated (this interrupt is detected every 1ms).

2.11.3.2 When the Peripheral Controller function is set

While updating the frame number, the controller sets "1" to this bit (this interrupt is detected every 1ms). The controller detects the SOFR interrupt by internal interpolation even if the SOF packet from the USB Host is corrupted.

2.11.4 Device state transition interrupt status bit (DVST)

When the Peripheral Controller function is set, if the controller detects a change in the device state, it updates the **DVSQ** value and sets "1" to this bit.

When this interrupt occurs, clear the status before the controller detects the next device status state transition.

Downloaded from Elcodis.com electronic components distributor

2.11.5 Control transfer and stage transition interrupt status bit (CTRT)

When writing the Peripheral Controller function, if the controller detects the stage transition of control transfer, it updates the **CTSQ** value and sets "1" to this bit.

When this interrupt occurs, clear the status before the controller detects stage transition after the control transfer.

2.11.6 Buffer empty interrupt status bit (BEMP)

The controller sets "1' in the interrupt when, among the **BEMPSTS** register **PIPEBEMP** bits corresponding to the pipe for which "1" is written to the **BEMPENB** register **PIPEBEMPE** bit (when the controller detects the **BEMP** interrupt status for at least one pipe from the pipes for which the software has enabled the **BEMP** interrupt notification), at least one bit is "1".

Refer to the **PIPEBEMP** register for assert conditions of the **PIPEBEMP** status.

If the software writes "0" for all the **PIPEBEMP** bits corresponding to the pipe that is enabled by the **PIPEBEMPE** bit, the controller clears this bit to "0'. This bit cannot be cleared to "0" even if "0" is written to this bit by the software.

2.11.7 Buffer not ready interrupt status bit (NRDY)

The controller sets "1" in the interrupt when, among the **BNRDYSTS** register **PIPENRDY** bits corresponding to the pipe for which "1" is written to the **NRDYENB** register **PIPENRDYE** bit (when the controller detects the **NRDY** interrupt status for at least one pipe from the pipes for which the software has enabled the **NRDY** interrupt notification), at least one bit is "1".

Refer to the **PIPENRDY** register for assert conditions of the **PIPENRDY** status.

If the software writes "0" to all the **PIPENRDY** bits corresponding to the pipe that is enabled by the **PIPENRDYE** bit, the controller clears this bit to "0". This bit cannot be cleared to "0' even if the software writes "0" to this bit.

2.11.8 Buffer ready interrupt status bit (BRDY)

The controller sets "1" in the interrupt when, among the **BRDYSTS** register **PIPEBRDY** bits corresponding to the pipe for which "1" is written in the **BRDYENB** register **PIPEBRDYE** bit (when the controller detects the **BRDY** interrupt status for at least one pipe from the pipes for which the software has enabled the **BRDY** interrupt notification), at least one bit is "1".

Refer to the **PIPEBRDY** register for the assert conditions of the **PIPEBRDY** status.

If the software writes "0" to all the **PIPEBRDY** bits corresponding to the pipe that is enabled by the **PIPEBRDYE** bit, the controller clears this bit to "0". This bit cannot be cleared to "0" even if the software writes "0" to this bit.

Downloaded from Elcodis.com electronic components distributor

♦ Interrupt status register 1 [INTSTS1] <Address: 42H>

15	14	13	12	11	10	9	8	7	6	5	4	3	2	1	0
OVRCR	BCHG		DTCH	ATTCH					EOFERR	SIGN	SACK				
0 -	0 -	? ?	0 -	0 -	? ?	? ?	? ?	? ?	0 -	0 -	0 -	? ?	? ?	? ?	? ?

Bit	Name	Function	Software	Hardware	Remarks
15	OVRCR Port0 OVRCR interrupt status	Port0 OVRCR interrupt status is set. This interrupt is issued when the input status of OVCUR0A pin or OVCUR0B pin is modified. 0: OVRCR interrupt not issued 1: OVRCR interrupt issued	R/W(0)	W	H (Read value invalid when P)
14	BCHG Port0 USB bus modify interrupt status	Port0 USB bus change interrupt status is set. 0: BCHG interrupt not issued 1: BCHG interrupt issued	R/W(0)	W	H (Read value invalid when P)
13	Unassigned. Fix to "0".				
12	DTCH Port0 USB detach detect interrupt status	Port0 USB detach detect interrupt status is set. 0: DTCH interrupt not issued 1: DTCH interrupt issued	R/W(0)	W	H (Read value invalid when P)
11	ATTCH Port0 USB attach detect interrupt status	Port0 ATTCH interrupt status is set. 0: ATTCH interrupt not issued 1: ATTCH interrupt issued	R/W(0)	W	H (Read value invalid when P)
10-7	Unassigned. Fix to "0".				
6	EOFERR Port0 EOF error detect interrupt status	Port0 EOFERR interrupt status is set. 0: EOFERR interrupt not issued 1: EOFERR interrupt issued	R/W(0)	W	H (Read value invalid when P)
5	SIGN Setup transaction error interrupt status	Setup transaction error interrupt status is set. 0: SIGN interrupt not issued 1: SIGN interrupt issued	R/W(0)	W	H (Read value invalid when P)
4	SACK Setup transaction normal response interrupt status	Setup transaction normal response interrupt status is set. 0: SACK interrupt not issued 1: SACK interrupt issued	R/W(0)	W	H (Read value invalid when P)
3-0	Unassigned. Fix to "0".				

Remarks

* Enable the interrupt caused by the status changes indicated by each bit of this register, only when the Host Controller function is selected.
* To clear the status of each bit of this register, use the software to write "0" only to the bit which is to be cleared, and "1" to other bits.
* The controller detects the change in status indicated by the **OVRCR** and **BCHG** bits of this register even while the clock is being stopped ("SCKE=0"), and notifies the interrupt if the corresponding interrupt is enabled. When the clock is enabled, use the software to clear the status. Interrupt for bits other than the **OVRCR** and **BCHG** bits cannot be detected while the clock is being stopped ("SCKE=0").

Downloaded from Elcodis.com electronic components distributor

2.11.9 Port0 OVRCR Interrupt status bit (OVRCR)

When input status of the **OVCUR0A** or **OVCUR0B** pin is modified (from Low to High, or from High to Low), this controller detects the Port0 **OVRCR** interrupt and sets "1" to this bit. Here, if "1" has been written to the applicable interrupt permitted bit by the software, this controller asserts the INT_N pin and notifies that the interrupt is issued. This controller shows the present input status for the **OVCUR0A** and **OVCUR0B** pins in the **SYSSTS0** register **OVCMON** bit.

When selecting the Host Controller function, it is possible to detect the occurrence of the software over-current if the over-current notification signal from the power supply IC, which supplies the VBUS for the devices to be connected to the USB on Port0, is written to the **OVCUR0A** or **OVCUR0B** pin. When the **OVRCR** interrupt is issued, use the software several times to check the consistency in read of the **OVCMON** bit and reject the chattering.

2.11.10 Port0 USB bus change interrupt status bit (BCHG)

When a state change for Full-/Low-Speed signal level of Port0 is issued (modify from J-State, K-State, or SE0 State to J-State, K-State or SE0 State), this controller detects the Port0 **BCHG** interrupt and sets "1" to this bit. Here, if "1" has been written to the applicable interrupt permitted bit by the software, this controller asserts the INT_N pin and notifies that the interrupt is issued. This controller displays the present input status of Port0 in the **SYSSTS0** register **LNST** bit.

Enable the **BCHG** interrupt under the following conditions:

(1) When enabling remote wakeup to enter the suspend status
(2) When stopping the clock to enter the suspend status (necessary in order to detect detach during suspend status)
(3). When clock is stopped because no Peripheral Devices is connected (necessary to detect attach)

When a **BCHG** interrupt occurs in condition (1), confirm the remote wakeup of the Peripheral Device with the **DVSTCTR** register **RESUME** bit. When a **BCHG** interrupt occurs under conditions (2) or (3), eliminate chattering on the **LNST** bit with software, and check for attach/detach to/from the Peripheral Device.

2.11.11 Port0 USB detach detection interrupt status bit for the Host Controller function (DTCH)

When the USB bus detach for Port0 is detected, this controller detects the Port0 **DTCH** interrupt and sets "1" to this bit. Here, if "1" has been written to the applicable interrupt permitted bit by the software, this controller asserts the INT_N pin and notifies that the interrupt is issued.

This controller detects the bus detach using the standards as given in the USB Specification Revision 2.0.

This controller controls the hardware given below after detecting the **DTCH** interrupt (irrespective of the setting value of the applicable interrupt permitted bit). The software closes all communication by the pipe for all applicable ports. Then, modify the status to attach wait (issue **ATTCH** interrupt) for the applicable ports.
(1) Modify the **UACT** bit of the port where the **DTCH** interrupt has been detected to "0" and set.
(2) Modify the status of the port where the **DTCH** interrupt was issued to "idle".

2.11.12 Port0 USB attach detection interrupt status bit for the Host Controller function (ATTCH)

When selecting the Host Controller function, and when this controller detects the J-State or K-State of Full-/Low-Speed signal level on Port0 within 2.5µs, it detects the Port0 **ATTCH** interrupt and sets "1" to this bit. Here, if "1" has been written to the applicable interrupt permitted bit by the software, this controller asserts the INT_N pin and notifies that the interrupt is issued.

The specific **ATTCH** interrupt detection conditions for this controller are given below:
(1) When modified from K-State, SE0 or SE1 to J-State and continued in the J-State for 2.5µs
(2) When modified from J-State, SE0 or SE1 to K-State and continued in the K-State for 2.5µs

Downloaded from Elcodis.com electronic components distributor

2.11.13 Port0 EOF error interrupt status bit for the Host Controller function (EOFERR)

When this controller detects that communication for Port0 is not closed at the point of EOF2 timing as defined in the USB Specification Revision 2.0, it detects the Port0 **EOFERR** interrupt and sets "1" to this bit. Here, if "1" has been written to the applicable interrupt permitted bit by the software, this controller asserts the INT_N pin and notifies that the interrupt is generated.

This controller controls the hardware shown below after detecting the **EOFERR** interrupt (regardless of the written value to the applicable interrupt permitted bit). The software closes all communication by the pipe for all applicable ports. Then, re-enumerate the applicable ports.
(1) Modify the port **UACT** bit where the **EOFERR** interrupt has been detected to "0" and set.
(2) Modify the status of the port where the **EOFERR** interrupt was issued to "idle".

2.11.14 Setup transaction error interrupt status bit for the Host Controller function (SIGN)

When the Setup transaction is issued by this controller, and is issued three times consecutively, in the state where no ACK response is received from the Peripheral device, this controller detects the Port0 **SIGN** interrupt and sets "1" to this bit. Here, if "1" has been written to the applicable interrupt permitted bit by the software, this controller asserts the INT_N pin and notifies that the interrupt is generated.

The specific **SIGN** interrupt detection conditions for this controller when one of the three responses given below are received for the Setup transaction issued three times consecutively:
(1) When a timeout is detected in the state when the Peripheral device does not respond
(2) When the ACK packet is corrupt
(3) When a handshake (NAK, NYET, or STALL) other than ACK is received

2.11.15 Setup transaction normal acknowledgement interrupt status bit for the Host Controller function (SACK)

When the Setup transaction is issued by this controller and the ACK response is received from the Peripheral device, this controller detects the Port0 **SACK** interrupt and sets "1" to this bit. Here, if "1" has been written to the applicable interrupt permitted bit by the software, this controller asserts the INT_N pin and notifies that the interrupt is generated.

Downloaded from Elcodis.com electronic components distributor

♦ Interrupt status register 2 [INTSTS2] <Address: 44H>

15	14	13	12	11	10	9	8	7	6	5	4	3	2	1	0
OVRCR	BCHG		DTCH	ATTCH					EOFERR						
0 -	0 -	? ?	0 -	0 -	? ?	? ?	? ?	? ?	0 -	? ?	? ?	? ?	? ?	? ?	? ?

Bit	Name	Function	Software	Hardware	Remarks
15	OVRCR Port1 OVRCR interrupt status	Port1 OVRCR interrupt status is set. When the input status of the OVCUR1 pin is modified, this interrupt is issued. 0: OVRCR interrupt not issued 1: OVRCR interrupt issued	R/W(0)	W	H (Read value invalid when P)
14	BCHG Port1 USB bus modify interrupt status	Port1 USB bus modify interrupt status is set. 0: BCHGinterrupt not issued 1: BCHGinterrupt issued	R/W(0)	W	H (Read value invalid when P)
13	Unassigned. Fix to "0".				
12	DTCH Port1 detach detect interrupt status	Port1 detach detect interrupt status is set. 0: DTCHinterrupt not issued 1: DTCHinterrupt issued	R/W(0)	W	H (Read value invalid when P)
11	ATTCH Port1 attach detect interrupt status	Port1 ATTCH interrupt status is set. 0: ATTCH interrupt not issued 1: ATTCH interrupt issued	R/W(0)	W	H (Read value invalid when P)
10-7	Unassigned. Fix to "0".				
6	EOFERR Port1 EOF error detect interrupt status	Port1 EOFERR interrupt status is set. 0: EOFERR interrupt not issued 1: EOFERR interrupt issued	R/W(0)	R	H (Read value invalid when P)
5-0	Unassigned. Fix to "0".				

Remarks

* Enable the interrupt caused by the changes in status shown by each bit of the register, only when the Host Controller function is selected.
* To clear the status of each bit of this register, use the software to write "0" only to the bit which is to be cleared, and "1" to the other bits.
* The controller detects the change in status indicated by the **OVRCR** and **BCHG** bits of this register, even while the clock is being stopped ("SCKE=0"), and notifies the interrupt if the corresponding interrupt is enabled. When the clock is enabled, use the software to clear the status. Interrupt for the bits other than the **OVRCR** and **BCHG** bits cannot be detected while the clock is being stopped ("SCKE=0").

Downloaded from Elcodis.com electronic components distributor

2.11.16 Port1 OVRCR interrupt status bit (OVRCR)

When input status of the **OVCUR1** pin is modified (from High to Low, or from Low to High), this controller detects the Port1 **OVRCR** interrupt and setss "1" to this bit. Here, if "1" has been written to the applicable interrupt permitted bit by the software, this controller asserts the INT_N pin and notifies that the interrupt is issued. This controller shows the present status of the **OVCUR1** pin in the **SYSSTS1** register **OVCMON** bit.

When selecting the Host Controller function, it is possible to detect the software over-current occurrence if the over-current notification signal from the power supply IC that supplies to the VBUS for the devices to be connected to the USB on Port1 is set to the **OVCUR1** pin. When the **OVRCR** interrupt is issued, use the software to check the consistency in reading of **OVCMON** bit several times and reject the chattering.

2.11.17 Port1 USB bus change interrupt status bit (BCHG)

When a state change for the Port1 Full-/Low-Speed signal level is issued (from J-State, K-State, or SE0 State to J-State, K-State or SE0 State), this controller detects the Port1 **BCHG** interrupts and sets "1" to this bit. Here, if "1" has been written to the applicable interrupt permitted bit by the software, this controller asserts the INT_N pin and notifies that the interrupt is issued. This controller displays the present input status of Port0 in the **SYSSTS1** register **LNST** bit. Refer to 2.11.10.

2.11.18 Port1 USB detach detection interrupt status bit for the Host Controller function (DTCH)

When the USB bus detach for Port1 is detected, this controller detects the Port1 **DTCH** interrupt and sets "1" to this bit. Here, if "1" has been written to the applicable interrupt permitted bit by the software, this controller asserts the INT_N pin and notifies that the interrupt is issued. Refer to 2.11.11.

2.11.19 Port1 USB attach detection interrupt status bit for the Host Controller function (ATTCH)

When selecting the Host Controller function, and when this controller detects the J-State or K-State of the Full-/Low-Speed signal level on Port0 within 2.5µs, this controller detects the Port1 **ATTCH** interrupt and sets "1" to this bit. Here, if "1" has been written to the applicable interrupt permitted bit by the software, this controller asserts the INT_N pin and notifies that the interrupt is issued. Refer to 2.11.12.

2.11.20 Port1 EOF error interrupt status bit for the Host Controller function (EOFERR)

When this controller detects that the communication for Port1 is not closed at the point of EOF2 timing as defined in the USB Specification Revision 2.0, this controller detects the Port1 **EOFERR** interrupt and sets "1" to this bit. Here, if "1" has been written to the applicable interrupt permitted bit by the software, this controller asserts the INT_N pin and notifies that the interrupt is issued. Refer to 2.11.13.

Downloaded from Elcodis.com electronic components distributor

♦ BRDY interrupt status register [BRDYSTS] <Address: 46H>

15	14	13	12	11	10	9	8	7	6	5	4	3	2	1	0
						PIPEBRDY									
? ?	? ?	? ?	? ?	? ?	? ?	0 -	0 -	0 -	0 -	0 -	0 -	0 -	0 -	0 -	0 -

Bit	Name	Function	Software	Hardware	Remarks
15-10	Unassigned. Fix to "0".				
9-0	PIPEBRDY BRDY interrupt status of each pipe	BRDY interrupt status of each pipe is set. 0: Interrupt not issued 1: Interrupt issued	R/W(0)	W	

Remarks
* Bit number corresponds to the pipe number.
* If writing "BRDYM=0", to clear the status of each bit of this register, write "0" only to the bit that is to be cleared and "1" to other bits.
* If writing "BRDYM=0", clear this interrupt before accessing the FIFO.

2.11.21 BRDY interrupt status bit of each pipe (PIPEBRDY)

When the **BRDY** interrupt is detected for the pipe with the controller, the controller sets "1" in the BRDYSTS register PIPEBRDY bit. Here, by using the software when "1" is written to the bit corresponding to BRDYENB register, the controller sets "1" to the **INTSTS0** register **BDY bit** and asserts the interrupt from the INT_N pin.

For the **BRDY** interrupt, occurrence conditions and clearing method change according to the **BRDYM** and **BFRE** bits of each pipe.

2.11.21.1 Writing "BRDYM=0" and "BFRE=0"

For these, the **BRDY** interrupt indicates the possibility of access to the FIFO port. In the following conditions, the controller issues the internal **BRDY** interrupt request trigger and sets "1" in the **PIPEBRDY** bit corresponding to the pipe for which a request trigger was issued.

(1) When the pipe is set to transmit
(a) When the software has modified the **DIR** bit from "0" to "1".
(b) When the controller ends the packet transmission of the pipe in the condition where write is not possible from the CPU to the FIFO buffer that has been assigned to the pipe (when the **BSTS** bit read value is "0"). When set to continuous transmission/reception, the request trigger is issued when transmission of one FIFO buffer is complete.
(c) When the FIFO buffer is set to double buffer, one side of the FIFO buffer is empty even if writing to other side is completed. During writing to the FIFO buffer, the request trigger is not issued until write on other side is completed, even if write on one side is completed.
(d) In an isochronous transfer type pipe, when the hardware causes a buffer flash.
(e) When the status of the FIFO bit has been modified from "write disabled" to "write enabled" by writing "1" to the **ACLRM** bit.

Request trigger is not issued for DCP (in other words, in data transmission of control transfer).

(2) When the pipe is set to receive
(a) When the controller ends the packet transmission of the pipe in the condition where write is not possible from the CPU to the FIFO buffer that has been assigned to the pipe (when the **BSTS** bit read value is "0"). A request trigger is not issued for the transaction of data PID mismatch. When set to continuous transmission/reception mode, the request trigger is issued when transmission of one FIFO buffer is complete. When a short packet is received, the request trigger is issued even if space is available in the FIFO buffer. While using the transaction counter, a request trigger is issued when a packet of setup value is received. Here, the request trigger is issued even if space is available in the FIFO buffer.
(b) When the FIFO buffer is set to double buffer, if the FIFO buffer read is complete, one more FIFO buffer read becomes possible. If one more buffer is received during read, the request trigger is not issued until the read of the current buffer is completed.

When the Peripheral Controller function is selected, this interrupt is not issued during communication with the control

Downloaded from Elcodis.com electronic components distributor

transfer status stage.

The software can write to (clear) the PIPEBRDY interrupt status of the pipe to "0" by writing "0" to the bit corresponding to the pipe of this bit. Here, write "0" to the bits corresponding to other pipes. Clear the interrupt status before accessing the FIFO buffer.

2.11.21.2 Writing "BRDYM=0" and "BFRE=1"

If writing these, when the controller reads all the data of one transfer in reception pipe, it is determined that a BRDY interrupt was issued and "1" is set in the bit corresponding to the pipe of register. In either of the following conditions, it is determined that the controller receives the final data in one transfer:
(1) When a short packet, including a zero-length packet, is received
(2) When a packet of **TRNCNT** bit setup value is received by using transaction counter (**TRNCNT** bit)

When this data is read after fulfilling the above-mentioned determination conditions, the controller concludes that the entire data of one transfer is read.

If a zero-length packet is received when the FIFO buffer is empty, the controller concludes that the entire data of one transfer is read when a zero-length packet on CPU side is toggled. In this case, to start the next transfer by using the software, write "1" to the **BCLR** bit of corresponding **FIFOCTR** register.

If writing these, the controller does not detect **BRDY** interrupt for the transmission pipe.

The software can write to (clear) the **PIPEBRDY** interrupt status of the pipe to "0" by writing "0" to the bit corresponding to the pipe of this bit , and by writing "1" to the bit corresponding to other pipe.

While using this mode, do not modify the setup value of **BFRE** bit until the transfer process is completed. While modifying **BFRE** bit during the process, clear all the FIFO buffers of the corresponding pipe by **ACLRM** bit.

2.11.21.3 Writing "BRDYM=1" and "BFRE=0"

If writing these, the bit value is coupled with the pipe's **BSTS** bit. In other words, the controller sets "1" or "0" depending on the FIFO buffer status of **BRDY** interrupt status.
(1) When the pipe is set to transmit. Sets "1" when the data can be written in the FIFO port, otherwise sets "0". However, the **BRDY** interrupt is not asserted even if the DCP transmission pipe can be written to.
(2) When the pipe is set to receive. Sets "1" when the data can be written in the FIFO port, and "0" when all the data is read (status changed to "Read disabled" status).

When the FIFO buffer is empty and a zero-length packet is received, "1" is set in the corresponding bit until the software writes "BCLR=1", and the BRDY interrupt is asserted."

If writing these, the software cannot write "0" to this bit.

If writing "BRDYM=1", write "0" to all the **BFRE** bits (all pipes). If writing "BRDYM=1", write "1" to the **INTL** bit (level control).

Downloaded from Elcodis.com electronic components distributor

♦ NRDY Interrupt status register [NRDYSTS] <Address: 48H>

15	14	13	12	11	10	9	8	7	6	5	4	3	2	1	0
						PIPENRDY									
? ?	? ?	? ?	? ?	? ?	? ?	0 -	0 -	0 -	0 -	0 -	0 -	0 -	0 -	0 -	0 -

Bit	Name	Function	Software	Hardware	Remarks
15-10	Unassigned. Fix to "0".				
9-0	PIPENRDY NRDY interrupt status of each pipe	NRDY interrupt status of each pipe is set. 0: Interrupt not issued 1: Interrupt issued	R/W(0)	W(1)	

Remarks
* Bit number corresponds to the pipe number.
* To clear the status indicated by each bit of the register, write "0"only the bit to be cleared and other bits to "1".

2.11.22 NRDY interrupt status bit of each pipe (PIPENRDY)

For the pipe set to "PID=BUF" by the software, when the internal **NRDY** interrupt request is issued by the controller, it sets "1" to the bit corresponding to the **NRDYSTS** register **PIPENRDY** bit. Here, when the software is used to write "1" to the bit corresponding to the **NRDYENB** register, the controller sets "1" in the **INTSTS0** register **NRDY** bit and asserts the interrupt from the INT_N pin.

Conditions for the internal **NRDY** interrupt request for the pipe that is issued by the controller are given in 2.11.22.1, 2.11.22.2 and 2.11.22.3. However, while executing the Setup transaction when the Host Controller function is selected, the above-mentioned conditions do not correspond to the conditions for issuing the interrupt. When the Host Controller function is selected, a SACK interrupt or SIGN interrupt is detected in the Setup transaction. When the Peripheral Controller function is selected, an interrupt request is not issued while executing the control transfer status stage.

Downloaded from Elcodis.com electronic components distributor

2.11.22.1 If the Host Controller function is selected, and the connection where a split transaction does not occur

(1) When the pipe is transmitting: When any of the conditions from (a) to (c) are fulfilled, the controller detects the **NRDY** interrupt.

(a) In an isochronous transfer type pipe, when the time reaches the Out-token issue timing where transmission data does not exist in the FIFO buffer. Here, the controller sends a zero-length packet in continuation with the Out-token, sets "1" to the bit corresponding to the **PIPENRDY** bit, and also sets "1" to the **OVRN** bit.

(b) In a transfer type pipe that is not isochronous, and in communications other than a Setup transaction, when a case occurs continuously three times in any combination where a Peripheral device is idle (no response) (detected timeout without detecting a handshake packet from the Peripheral device) or an error has been detected in the Peripheral device packet. Here, the controller sets "1" to the **PIPENRDY** bit and modifies the **PID** bit of the corresponding pipe to "NAK".

(c) In communications other than a Setup transaction, when a stall handshake is received from the Peripheral device (STALL is related to OUT as well as PING). Here, the controller sets "1" to the bit corresponding to the **PIPENRDY** bit, and modifies the PID bit of corresponding pipe to "STALL(11)".

(2) When the pipe is receiving:

(a) In an isochronous transfer type pipe, the time reaches the In-token issue timing when there is no space in the FIFO buffer. Here, the controller deletes the reception data related to the In-token, sets "1" to the **PIPENRDY** bit corresponding to the pipe, and also sets "1" in the **OVRN** bit. Moreover, when a packet error is detected in the reception data related to the In-token, "1" is also set to the **CRCE** bit.

(b) In a transfer type pipe that is not isochronous, when a case occurs continuously three times in any combination where the Peripheral device does not respond to the In-token issued by the controller (detected a timeout without detecting a handshake packet from the Peripheral device) or an error is detected in the Peripheral device packet. The controller sets "1" to the **PIPENRDY** bit corresponding to the pipe, and modifies the **PID** bit of the corresponding pipe to "NAK".

(c) In an isochronous transfer type pipe, when the Peripheral device does not respond to the In-token (a timeout is detected without detecting a data packet from the Peripheral device), or when an error occurs in the Peripheral device packet. In this case, the controller sets "1" to the **PIPENRDY** bit corresponding to the pipe (the PID bit of the corresponding pipe is not modified).

(d) In an isochronous transfer type pipe, when a CRC error or bit stuffing error is detected in the received packet. In this case, the controller sets "1" to the **PIPENRDY** bit corresponding to the pipe and sets "1" to the CRCE bit.

(e) When a STALL handshake is received. In this case, the controller sets "1" in the **PIPENRDY** bit corresponding to the pipe, and modifies the **PID** bit of the corresponding pipe to "1".

Downloaded from Elcodis.com electronic components distributor

2.11.22.2 When the Host Controller function is selected, and the connection where a split transaction occurs

(1) When the pipe is transmitting

(a) In an isochronous transfer type pipe, when the time reaches the Out-token issue timing where transmission data does not exist in the FIFO buffer. Here, while issuing the Start-Split (S-Split) transaction, it sets "1" to the **PIPENRDY** bit corresponding to the pipe, and sets "1" in the **OVRN** bit. It also sends a zero-length packet in continuation with the Out-token.

(b) In a transfer type pipe that is not isochronous, when a case occurs continuously three times in any combination where the Hub does not respond to S-Split or Complete-Split (C-Split) transactions (detected timeout without detecting a handshake packet from the hub) or an error has been detected in the hub packet. Here, the controller sets "1" to the bit corresponding to the **PIPENRDY** bit and modifies the **PID** bit of the corresponding pipe to "NAK". When a **NRDY** interrupt is detected during a C-Split issue, the controller clears the **CSSTS** bit to "0" and sets it.

(c) When a STALL handshake is received for the C-Split. In this case, the controller sets "1" to the **PIPENRDY** bit corresponding to the pipe, modifies the **PID** bit of the corresponding file to "STALL(11)", and clears the **CSSTS** bit to "0" and sets it.

(d) In an interrupt transfer type pipe, when a NYET is received for the C-Split and the microFrame number is "4". This controller sets "1" to the **PIPENRDY** bit corresponding to the pipe, it clears the **CSSTS** bit to "0" and sets it (the **PID** bit of the corresponding pipe is not modified).

(2) When the pipe is receiving

(a) In an isochronous transfer type pipe, the time reaches the In-token issue timing when there is no space in the FIFO buffer. Here, the controller sets "1" to the **PIPENRDY** bit corresponding to the pipe when a C-Split or S-Split is issued, and sets "1" to the **OVRN** bit. It also deletes the reception data related to the In-token.

(b) In pipe transfer of bulk transfer type or in transfer other than Setup transaction of DCP, when a C-Split or S-Split is issued, and when a case occurs continuously three times in any combination where the Hub does not respond to the In-token issued by the controller (detected timeout without detecting Hub DATA packet), or an error has been detected in the Hub packet. Here the controller sets "1" to the **PIPENRDY** bit corresponding to the pipe and modifies the **PID** bit of the corresponding pipe to "NAK". When these conditions occur in a C-Split, the controller clears the **CSSTS** bit to "0" and sets it.

(c) In C-Split of pipe of isochronous transfer type or Interrupt, when a case occurs continuously three times in any combination where the Hub does not respond to the In-token issued by the controller (a detected timeout without detecting the DATA packet from the Hub), or an error has been detected in the Hub packet. In the pipe of Interrupt transfer type, when these conditions occur, the controller sets "1" to the **PIPENRDY** bit corresponding to the pipe, modifies the **PID** bit of the corresponding pipe to "NAK", and clears the **CSSTS** bit to "0". In the pipe of isochronous transfer type, when these conditions occur, the controller sets "1" to the **PIPENRDY** bit corresponding to the pipe, sets "1" to the **CRCE** bit, clears the **CSSTS** bit to "0" and sets it (the **PID** bit of the pipe is not modified).

(d) In a C-Split of pipe of transfer type other than isochronous, when a STALL handshake is received, the controller sets "1" to the **PIPENRDY** bit corresponding to the pipe, modifies the **PID** bit of the orresponding pipe to "STALL(11)", clears the **CSSTS** bit to "0" and sets it.

(e) In a C-Split of pipe of transfer type isochronous/Interrupt, when a NYET handshake is received when Microframe is "4". The controller sets "1' in the **PIPENRDY** bit corresponding to the pipe, sets "1" to the **CRCE** bit, clears the **CSSTS** bit to "0" and sets it (the **PID** bit of the pipe is not modified).

Downloaded from Elcodis.com electronic components distributor

2.11.22.3 Peripheral Controller function selection

(1) When the pipe is transmitting:

(a) When an IN Token is received while there is no transmission data in the FIFO buffer and the corresponding PIPE **PID** bit is set to “BUF” (“01”):
While receiving the In-token, the controller issues an **NRDY** interrupt and sets "1" to the **PIPENRDY** bit. If the interrupt pipe transfer type is isochronous, the controller sends a zero-length packet and sets "1" to the **OVRN** bit.

(2) When the pipe is receiving:

(a) When the corresponding PIPE **PID** bit is set to “BUF” (“01”) and an OUT Token is received while there is no open space in the FIFO buffer:
If an interrupt pipe transfer type is isochronous, when the Out-token is received, the controller issues a **NRDY** interrupt, sets "1" to the **PIPENRDY** bit and sets "1" to the **OVRN** bit. If the interrupt pipe transfer type is not isochronous, the controller issues a **NRDY** interrupt request while sending a NAK handshake after receiving the data in continuation with an Out-token, and sets "1" to the **PIPENRDY** bit. However, while resending (when DATA-PID mismatch occurs), a **NRDY** interrupt request is not issued. If there is a data packet error, the request is not issued.

(b) When the corresponding PIPE **PID** bit is set to “BUF” (“01”) and a PING token is received while there is no open space in the FIFO buffer:
While receiving the PING-token, the controller issues **NRDY** interrupt and sets "1" to the **PIPENRDY** bit.

(c) In an Isochronous transfer PIPE, when the **PID** bit is set to “BUF” (“01”) and data is not received successfully within the interval frame:
The controller issues **NRDY** interrupt request and sets "1" to the **PIPENRDY** bit in the SOF reception timing.

Downloaded from Elcodis.com electronic components distributor

♦ BEMP interrupt status register [BEMPSTS] <Address: 4AH>

15	14	13	12	11	10	9	8	7	6	5	4	3	2	1	0
						PIPEBEMP									
? ?	? ?	? ?	? ?	? ?	? ?	0 -	0 -	0 -	0 -	0 -	0 -	0 -	0 -	0 -	0 -

Bit	Name	Function	Software	Hardware	Remarks
15-10	Unassigned. Fix to "0".				
9-0	PIPENRDY BEMP interrupt status of each pipe	BEMP interrupt status of each pipe is set. 0:interrupt not issued 1:interrupt issued	R/W(0)	W(1)	

Remarks
* Bit number corresponds to the pipe number.
To clear the status shown by each bit of this register, write "0" only for the bit to be cleared and "1" for the other bits.

2.11.23 BEMP interrupt status bit of each pipe (PIPEBEMP)

For the pipe set as "PID=BUF" by the software, when the controller uses the software to detect the **BEMP** interrupt, it sets "1" to the bit corresponding to the BEMPENB register. In this case, when using the software to write "1" to the bit corresponding to the BEMPENB register, the controller sets "1" to the **INTSTS0** register **BEMP** bit and asserts the interrupt from the INT_N pin.

The controller issues an internal BEMP interrupt request in the following cases:

(1) In the transmission pipe, when the FIFO buffer of the corresponding pipe is empty on completion of transmission (including transmission of the zero-length packet). When it is a single buffer setting, for the pipe other than the DCP, the internal **BEMP** interrupt request is issued simultaneously with the **BRDY** interrupt.

However, the internal **BEMP** interrupt request is not issued in the following cases:
(a) If writing to a double buffer, when the software (DMAC) starts the data write for the FIFO buffer on the CPU side after completion of data transmission on one side.
(b) Buffer clear by writing "1" to the ACLRM bit or BCLR bit (empty).
(c) If writing to the Peripheral Controller function, IN transfer of control transfer status stage (zero-length packet transmission)

(2) In the receiving pipe
When the data size greater than the setup value of the maximum packet size is received normally. In this case, the controller issues the **BEMP** interrupt request, sets "1" in the bit corresponding to the PIPEBEMP bit, deletes the reception data, and modifies the **PID** bit to "STALL"("11")". The controller does not give any response if writing to the Host Controller function, and gives a STALL response if writing to the Peripheral Controller function.

However, the internal **BEMP** interrupt request is not issued in the following cases:
(a) When a CRC error or bit stuffing error, etc., have been detected in the reception data
(b) While executing a Setup transaction

The status can be cleared by writing "0" to this bit. No process is executed even if "1" is written to this bit.

Downloaded from Elcodis.com electronic components distributor

2.12 Frame Number Register

♦ Frame number register [FRMNUM] <Address: 4CH>

15	14	13	12	11	10	9	8	7	6	5	4	3	2	1	0
OVRN	CRCE				FRNM										
0 -	0 -	? ?	? ?	? ?	0 -	0 -	0 -	0 -	0 -	0 -	0 -	0 -	0 -	0 -	0 -

Bit	Name	Function	Software	Hardware	Remarks
15	OVRN Overrun/Underrun detect status	Whether Overrun/Underrun error is detected or not is set for the pipe transferred isochronously. 0: No error 1: Error	R/W(0)	W	
14	CRCE CRC error detect status	Whether CRC error is detected or not is set for the pipe transferred isochronously. 0: No error 1: Error	R/W(0)	W	
13-11	Unassigned. Fix to "0".				
10-0	FRNM Frame number	Latest frame number is displayed.	R	W	

Remarks
* The **OVRN** bit is used for debugging. Set the timing so that an Overrun/Underrun error does not occur in the system.

2.12.1 Overrun/Underrun detection status bit (OVRN)

In an isochronous transfer type pipe, the controller sets "1" to this bit when an Overrun/Underrun is detected. When an Overrun/Underrun is detected, the controller issues an internal **NRDY** request. Refer to 2.11.22 for details.

The software can clear this bit to "0" by writing "0" to this bit. In this case, write "1" to other bits of this register".

2.12.1.1 Host Controller function selection

The controller sets "1" to this bit in either of the following cases:
(1) When data has not been written completely to the FIFO buffer despite transmission, and the Out-token issued timing has been attained in the isochronous transfer type transmission pipe.
(2) When at least one part of the FIFO buffer is not free, and the In-token issued timing has been attained in the isochronous transfer transmission pipe.

2.12.1.2 Peripheral Controller function selection

The controller sets "1" to this bit in either of the following cases:
(1) When data has not been written completely to the FIFO buffer despite transmission, and the Out-token is received in the isochronous transfer type transmission pipe.
(2) When at least one part of the FIFO buffer is not free, and the Out-token is received in the isochronous transfer receiving pipe.

2.12.2 CRC error detection status bit (CRCE)

In an isochronous transfer pipe, the controller sets "1" to the bit when a CRC error or bit stuffing error has been detected.

The software can clear this bit to "0" by writing "0" to this bit. In this case, write "1' to other bits of this register".

When a CRC error or bit stuffing error is detected, the controller issues an internal **NRDY** request. Refer to 2.11.22 for details.

Downloaded from Elcodis.com electronic components distributor

2.12.3 Frame number bit (FRNM)

The controller updates the SOF issue timing every 1ms or updates this bit during SOF reception, and sets the frame number. Check the consistency twice during read of this bit by the software.

Downloaded from Elcodis.com electronic components distributor

♦µframe number register [UFRMNUM] <Address: 4EH>

15	14	13	12	11	10	9	8	7	6	5	4	3	2	1	0
													UFRNM		
? ?	? ?	? ?	? ?	? ?	? ?	? ?	? ?	? ?	? ?	? ?	? ?	? ?	0 -	0 -	0 -

Bit	Name	Function	Software	Hardware	Remarks
15-3	Unassigned. Fix to "0".				
2-0	UFRNM Microframe	Microframe number is set.	R	W	

Remarks
None

2.12.4 Microframe number bit (UFRMNUM)

When the speed of either Port0 or Port1 is Hi-Speed, the controller displays the Microframe number in this bit. When the speed of both Port0 and Port1 is other than Hi-Speed, the controller sets 0x00 to this bit.

Use software to check the consistency twice when this bit is being read.

Downloaded from Elcodis.com electronic components distributor

2.13 USB Address When the Peripheral Controller Function is Selected

♦ USBAddress register [USBADDR] <Address: 50H>

15	14	13	12	11	10	9	8	7	6	5	4	3	2	1	0
									USBADDR						
? ?	? ?	? ?	? ?	? ?	? ?	? ?	? ?	? ?	0 0	0 0	0 0	0 0	0 0	0 0	0 0

Bit	Name	Function	Software	Hardware	Remarks
15-7	Unassigned. Fix to "0".				
6-0	USBADDR USBAddress	When Peripheral Controller function is selected, USB address confirmation assigned from the host is set.	R	R/W	P (Read value invalid when H)

Remarks

2.13.1 USB address bit (USBADDR)

When the Peripheral Controller function is selected, the USB address received in this bit is set when the set address request is processed normally by the controller. When the Peripheral Controller function is selected, if a USB reset is detected by the controller, 0x00 is set to this bit.

When the Host Controller function is selected, the controller does not use this bit.

Downloaded from Elcodis.com electronic components distributor

2.14 USB Request Register

The USB request register is the register for saving the control transfer Setup request. When the Peripheral Controller function is selected, the received USB request value is stored. When the Host Controller function is selected, set the USB request to be sent.

♦ USB request type register [USBREQ] <Address: 54H>

15	14	13	12	11	10	9	8	7	6	5	4	3	2	1	0
bRequest								bmRequestType							
0	0	0	0	0	0	0	0	0	0	0	0	0	0	0	0
0	0	0	0	0	0	0	0	0	0	0	0	0	0	0	0

Bit	Name	Function	Software	Hardware	Remarks
15-8	bRequest request	USB request bRequest value	When P:R When H:R/W	When P:W When H:R	
7-0	bmRequest type request type	USB request bmRequest type value	When P:R When H:R/W	When P:W When H:R	

Remarks
None

2.14.1 USB request bit (bRequest)

2.14.1.1 Selecting the Host Controller function

Use the software to write to the USB request data value of the Setup transaction to be sent.

Use the software to write "SUREQ=1", but do not write the bit for the period until "SUREQ=0" is set by the controller.

2.14.1.2 Selecting the Peripheral Controller function

The USB request data value received in the Setup transaction by the controller is displayed in this bit. It is not possible (invalid) to write to this bit using the software.

2.14.2 USB request bit (bRmRequestType)

2.14.2.1 Selecting the Host Controller function

Use the software to write to the USB request data value of the Setup transaction to be sent.

Use the software to write "SUREQ=1", but do not write the bit for the period until "SUREQ=0" is set by the controller.

2.14.2.2 Selecting the Peripheral Controller function

The USB request data value received in the Setup transaction by the controller is set to this bit. It is not possible (invalid) to write to this bit using the software.

Downloaded from Elcodis.com electronic components distributor

♦ USB request value register [USBVAL] <Address: 56H>

15	14	13	12	11	10	9	8	7	6	5	4	3	2	1	0
wValue															
0 0	0 0	0 0	0 0	0 0	0 0	0 0	0 0	0 0	0 0	0 0	0 0	0 0	0 0	0 0	0 0

Bit	Name	Function	Software	Hardware	Remarks
15-0	wValue Value	USB request wValue value	When P:R When H:R/W	When P:W When H:R	

Remarks
None

2.14.3 Value bit (wValue)

This is the bit to write and read the value of the USB request wValue. b7-0 is a lower byte.

2.14.3.1 Selecting the Host Controller function

Use the software to write the value of the USB request wValue of the Setup transaction to be sent.

Use the software to write "SUREQ=1", but do not rewrite this bit until "SUREQ=0" is set by the controller.

2.14.3.2 When the Peripheral Controller function is selected

The USB request wValue value received in the Setup transaction by the controller is set in this bit. It is not possible (invalid) to write to this bit using the software.

♦ USB request index register [USBINDX] <Address: 58H>

15	14	13	12	11	10	9	8	7	6	5	4	3	2	1	0
wIndex															
0 0	0 0	0 0	0 0	0 0	0 0	0 0	0 0	0 0	0 0	0 0	0 0	0 0	0 0	0 0	0 0

Bit	Name	Function	Software	Hardware	Remarks
15-0	wIndex Index	USB request wIndex value	When P:R When H:R/W	When P:W When H:R	

Remarks
None

2.14.4 Index bit (wIndex)

This is the bit to write and read the value of the USB request wIndex. b7-0 is a lower byte.

2.14.4.1 Selecting the Host Controller function

Use the software to write the value of the USB request wIndex of the Setup transaction to be sent.

Use the software to write "SUREQ=1", but do not rewrite this bit until "SUREQ=0" is set by the controller.

2.14.4.2 Selecting the Peripheral Controller function

The USB request wIndex value received in the Setup transaction by the controller is set in this bit. It is not possible (invalid) to write to this bit using the software.

Downloaded from Elcodis.com electronic components distributor

♦ USB request index register [USBLENG] <Address: 5AH>

15	14	13	12	11	10	9	8	7	6	5	4	3	2	1	0
wLength															
0 0	0 0	0 0	0 0	0 0	0 0	0 0	0 0	0 0	0 0	0 0	0 0	0 0	0 0	0 0	0 0

Bit	Name	Function	Software	Hardware	Remarks
15-0	wLength Length	USB request wLength value	When P:R When H:R/W	When P:W When H:R	

Remarks
None

2.14.5 Length bit (wLength)

This is the bit to write and read the value of the USB request wLength. b7-0 is a lower byte.

2.14.5.1 Selecting the Host Controller function

Use the software to write the value of the USB request wIndex of the Setup transaction to be sent.

Use the software to write "SUREQ=1", but do not rewrite this bit until "SUREQ=0" is set by the controller.

2.14.5.2 Selecting the Peripheral Controller function

The USB request wLength value received in Setup transaction by the controller is set in this bit. It is not possible to write to this bit using the software.

Downloaded from Elcodis.com electronic components distributor

2.15 DCP Configuration

When using the control transfer for data communication, use the default control pipe (DCP).

♦ DCP configuration register [DCPCFG] <Address: 5CH>

15	14	13	12	11	10	9	8	7	6	5	4	3	2	1	0
							CNTMD	SHTNAK			DIR				
? ?	? ?	? ?	? ?	? ?	? ?	? ?	0 -	0 -	? ?	? ?	0 -	? ?	? ?	? ?	? ?

Bit	Name	Function	Software	Hardware	Remarks
15-5	Unassigned. Fix to "0".				
8	CNTMD Continuous transfer mode	Specifies whether to connect the pipe in continuous transfer mode. 0: Non-continuous transfer mode 1: Continuous transfer mode	R/W	R	
7	SHTNAK Pipe disabled at the end of transfer	For pipe reception direction, specifies whether to modify PID to NAK during transfer end. 0: Pipe continued at end of transfer 1: Pipe disabled at end of transfer	R/W	R	
3-0	Unassigned. Fix to "0".				
4	DIR Transfer register	Set transfer direction of data stage and status stage of control when the Host Controller function is selected. 0: Data reception direction 1: Data transmission direction	R/W	R	H (Write to "0" when P)
3-0	Unassigned. Fix to "0".				

Remarks
None

2.15.1 Transfer direction bit (DIR)

Set transfer direction of data stage and status stage of control when the Host Controller function is selected.

When the Peripheral Controller function is selected, write "0" to this bit.

2.15.2 Continuous transfer mode bit (CNTMD)

According to the setup value of this bit, this controller determines transmission/reception completion for the FIFO buffer assigned to the selected pipe, as shown in Table 2.14.

Table 2.14 Relation Between Transmission/Reception Completion Determination for the CNTMD Setup Value and the FIFO Buffer

CNTMD bit Setup value	Read Possible status and method to determine transmission possibility
0	If the transfer direction has been set to reception, the condition when the status of the FIFO buffer changes to Read Possible. When the controller has received one packet.
	If the transfer direction has been set to transmission, the condition when the status of the FIFO buffer changes to Transmission Possible. When following conditions are fulfilled: (1) The software has written the data of maximum packet size in the FIFO buffer. (2) The software has written the data of short packet (including the case of 0 byte) and "BVAL=1".
1	If the transfer direction has been set to reception, conditions for the FIFO buffer to change to Read Enabled status are: (1) When 256bytes of received data in the specified FIFO buffer (2) When the controller receives a short packet other than a zero-length packet (3) When the contoller receives a Zero-Length packet even though data is already stored in the specified FIFO buffer of the selected PIPE0.
	If the transfer direction has been set to transmission, the condition when the status of the FIFO buffer changes to Transmission Possible. When (1), or (2) from the following conditions is fulfilled: (1) When the data count written by the software does not match with one side of FIFO buffer size assigned to the selected pipe. (2) When the software writes the data (including 0 bytes) smaller than the data on one side of FIFO buffer

Downloaded from Elcodis.com electronic components distributor

assigned to the selected pipe0 and "BVAL=1".

※ When the Host Controller function is selected, if the **DIR** bit is set to "0" the transfer direction is reception and If the **DIR** bit is set to "1" it is transmission.
※ When the Peripheral Controller function is selected, if the **ISEL** bit is set to "0" the transfer direction is reception and If the **ISEL** bit is set to "1" it is transmission.

This bit can be modified when "CSSTS=0", "PID=NAK", and when the pipe in the CURPIPE bit is not written to. Execute USB communication using the selected pipe, use the software to continuously write "ACLRM=1" and "ACLRM=0", clear the FIFO buffer assigned to the selected pipe, and then modify this bit in addition to the status of the above three registers. To modify this bit after changing the **PID** bit of the corresponding pipe from "BUF" to "NAK", check that "CSSTS=0" and "PBUSY=0", and modify the bit. However, when the controller has modified the **PID** bit to "NAK", it is not necessary tto check the **PBUSY** bit.

2.15.3 Pipe disabled at the end of transfer bit (SHTNAK)

This bit is valid when DCP is receiving. When the software has set "1" to this bit for the receiving pipe, when the transfer end, the controller modifies the **PID** bit of the DSP to "NAK". The controller determines transfer end when the following conditions are fulfilled:
(1) When a short packet data (including a zero-length packet) is received normally.

This bit can be modified when "CSSTS=0" and "PID=NAK". To modify this bit after changing the **PID** bit of the DCP from "BUF" to "NAK", check that "CSSTS=0" and "PBUSY=0", and modify the bit. However, when the controller has modified the **PID** bit to "NAK", it is not necessary to check the **PBUSY** bit.

Write "0" to this bit for the transmission direction pipe".

2.15.4 Transfer direction bit (DIR)

Set transfer direction of data stage and status stage of control when the Host Controller function is selected.

When the Peripheral Controller function is selected, write "0" to this bit.

Downloaded from Elcodis.com electronic components distributor

♦ DCP maximum packet size register [DCPMAXP] <Address: 5EH>

15	14	13	12	11	10	9	8	7	6	5	4	3	2	1	0
DEVSEL									MXPS						
0 -	0 -	0 -	0 -	? ?	? ?	? ?	? ?	? ?	1 -	0 -	0 -	0 -	0 -	0 -	0 -

Bit	Name	Function	Software	Hardware	Remarks
15-12	DEVSEL Device select	When the Host Controller function is selected, specify the Peripheral device address of the communication partner of control transfer. 0000: Address"0000" 0001: Address"0001" ... 1001: Address"1001" 1010: Address"1010" 1011-1111: Reserved	R/W	R	H (Write all "0" when P)
11-7	Unassigned. Fix to "0".				
6-0	MXPS Maximum packet size	This specifies the maximum payload (maximum packet size) for the DCP.	R/W	R	

Remarks
None

2.15.5 Device select bit (DEVSEL)

When the Host Controller function is selected, write to the USB device address of the communication partner in this bit.

Write to this bit after writing to the **DEVADDx** register corresponding to the setup value of this bit. For example, while writing "DEVSEL=0010", write the **DEVADD2** address of the H'D4 address.

Not write to this bit except when "CSSTS=0", "PID=NAK", and "SUREQ=0". To modify this bit after changing the**PID** bit of the DCP from "BUF" to "NAK", check that "CSSTS=0" and "PBUSY=0" and then modify the bit. However, when the controller modifies the **PID** bit to "NAK", it is not necessary to check the **PBUSY** bit.

When the Peripheral Controller function is selected, write "0000" to this bit.

2.15.6 Maximum packet size bit (MXPS)

Write the maximum data payload of the DCP (maximum packet size) to this bit. 0x40 (64 bytes) is the default value.

Set the values according to the USB Specification Revision 2.0 while writing the **MXPS** bit. Not write to the **MXPS** bit except when "CSSTS=0", "PID=NAK", and when the pipe in the **CURPIPE** bit is not written. To modify this bit after changing the **PID** bit of the corresponding pipe from "BUF" to "NAK", check that "CSSTS=0" and "PBUSY=0", and then modify the bit. However, when the controller modifies the **PID** bit to "NAK", it is not necessary to check the **PBUSY** bit.

When "MXPS=0" is written, do not write to the FIFO buffer or write "PID=BUF".

Downloaded from Elcodis.com electronic components distributor

♦ DCP control register [DCPCTR] <Address: 60H>

15	14	13	12	11	10	9	8	7	6	5	4	3	2	1	0
BSTS	SUREQ	CSCLR	CSSTS	SUREQCLR			SQCLR	SQSET	SQMON	PBUSY	PINGE		CCPL	PID	
0 -	0 -	0 -	0 -	0 -	? ?	? ?	0 -	0 -	1 -	0 -	0 -	? ?	0 0	0 0	0 0

Bit	Name	Function	Software	Hardware	Remarks
15	BSTS Buffer status	Access possibility status of DCP FIFO buffer is set. 0: Buffer access is disabled 1: Buffer access is enabled	R	W	
14	SUREQ Setup token transmit	When the Host Controller function is selected, the Setup packet is transmitted by writing "1" to this bit. 0: Invalid 1: Transmit Setup packet	R/W(1)	R/W(0)	H (Write to "0" when P)
13	CSCLR CSPLIT status clear of split transaction	When the Host Controller function is selected, regarding the transfer using Split Transaction, the CSSTS bit can be cleared to "0" by writing "1" to this bit. In this case, the next DCP transfer restarts from SSPLIT. 0: Invalid 1: Clear CSSTS bit	R(0)/W(1)	R/W(0)	H (Write to "0" when P")
12	CSSTS Complete split (C-SPLIT) status of split transaction	When the Host Controller is selected, the split transaction C-SPLIT status is set. 0: During the Start-Split (S-SPLIT) transaction process or during the process of the device in which the split transaction is not used 1: During the C-SPLIT transaction process	R	R/W	H (Invalid read value when P)
11	SUREQCLR SUREQ bit clear	When the Host Controller is selected, the SUREQ bit can be cleared by writing "1" to this bit. 0: Invalid 1: Clear SUREQ bit to "0"	R(0)/W(1)	R/W(0)	H (Write to "0" when P")
10-9	Unassigned. Fix to "0".				
8	SQCLR Toggle bit clear	In DCP transfer, the expected value of sequence toggle bit of next transaction can be written to DATA0. 0: Invalid 1: Specifies DATA0	R(0)/W(1)	R	
7	SQSET Toggle bit set	In the DCP transfer, the expected value of the sequence toggle bit of the next transaction can be written to DATA1. 0: Invalid 1: Specifies DATA1	R(0)/W(1)	R	
6	SQMON Sequence toggle bit monitor	In the DCP transfer, the expected value of the sequence toggle bit of the next transaction is set. 0: DATA0 1: DATA1	R	W	
5	SPBUSY Pipe busy	When the PID bit of the DCP is modified from BUF to NAK, it is written to whether the actual communication of the DCP is transited to NAK status or not. 0: Transition to NAK is incomplete 1: Transition to NAK is complete	R	W	
4	PINGE PING token issue enabled	When the Host Controller function is selected, the PING token can be used in an OUT transaction by writing "1" to this bit. 0: PING token issue disabled 1: Normal PING operation	R/W	R	H (Write to "0" when P")
3	Unassigned. Fix to "0".				
2	CCPL Control transfer end enabled	When the Peripheral Controller function is selected, status stage end of control transfer is enabled by writing "1" to this bit. 0: Invalid 1: Control transfer end enabled	R(0)/W(1)	R/W(0)	P (Write to "0" when P")

Downloaded from Elcodis.com electronic components distributor

Bit	Name	Function	Software	Hardware	Remarks
1-0	PID Response PID	This bit controls the controller response in the control transfer. 00: NAK response 01: BUF response (conforms with the buffer state) 10: STALL response 11: STALL response	R/W	R/W	

Remarks
None

2.15.7 Buffer status bit (BSTS)

The controller indicates by this bit whether access of the FIFO buffer assigned to the DCP is possible from the CPU. The meaning of this bit differs according to the setup value of the **ISEL** bit as follows:
(1) When "ISEL=0": Indicates whether read of reception data is possible.
(2) When "ISEL=1": Indicates whether write of transmission data is possible.

2.15.8 Setup token transmission bit (SUREQ)

When the Host Controller function is selected, the controller transmits a Setup packet by using the software to write "1" to this bit.

After the Setup transaction process is completed, the controller issues a **SACK** interrupt or a **SIGN** interrupt and writes "0" to this bit. The controller writes "0" to this bit using the software to write "1" to the **SUREQCLR** bit.

Set the USB request to be transmitted to the **DEVSEL** bit, **USBREQ** register, **USBVAL** register, **USBINDX** register and **USBLENG** register, and then write "1" to this bit. Check whether the **PID** bit of the DCP is set to "NAK", and then write "SUREQ=1". Thereafter, do not modify the values of the **DEVSEL** bit, **USBREQ** register, **USBVAL** register, **USBINDX** register and **USBLENG** register until the Setup transaction is completed ("SUREQ=1").

Write "1" to this bit only while transmitting the Setup token. In other cases, always write it to "0".

When the Peripheral Controller function is selected, write "0" to this bit.

Downloaded from Elcodis.com electronic components distributor

2.15.9 C-SPLIT status clear bit of split transaction (CSCLR)

When the Host Controller function is selected, if the software writes "1" to this bit, the controller clears the **CSSTS** bit to "0". In transfer using Split Transaction, to restart the next transfer forcefully from S-Split, write "1" to this bit. In normal Split Transactions, since the controller clears the **CSSTS** bit automatically to "0" when the C-Split ends, the clear process by the software is not required.

Control the **CSSTS** bit by using it when the communication is stopped by "UACT=0" or when it is confirmed that transfer is not complete due to detach detection.

When "CSSTS=0", it remains "CSSTS=0" even if "1" is written to this bit.

When the Peripheral Controller function is selected, write "0" to this bit.

2.15.10 C-SPLIT status bit of split transaction (CSSTS)

When the Host Controller function is selected, the controller sets the C-Split status of the split transaction to this bit.

The controller sets "1" to this bit while starting the C-Split, and sets "0" when the C-Split end is detected.

Setting this bit sets a valid value only when the Host Controller function is selected.

2.15.11 SUREQ clear bit (SUREQCLR)

When the Host Controller function is selected, if the software writes "1" to this bit, the controller clears the **SUREQ** bit to "0". The controller always sets this bit to "0". In the Setup transaction, when communication is stopped by writing "SUREQ=1" without modifications, use the software to write "1" to this bit. In the usual Setup transaction, since the controller clears the **SUREQ** bit automatically to "0" when the transaction ends, the clear process by the software is not required.

Control the **SUREQ** bit by using this bit when the communication is stopped by "UACT=0", or when it is confirmed that transfer is not complete due to detach detection.

When the Peripheral Controller function is selected, write "0" to this bit.

2.15.12 Clear bit of sequence toggle bit (SQCLR)

If the software writes "1" to this bit, the controller writes the expected value of the sequence toggle bit of the pipe to DATA0. The controller always sets "0" to this bit. Do not write "1" to the **SQCLR** bit and **SQSET** bit simultaneously.

Write "1" to this bit when "CSCTS=0", "PID=NAK" and "when not set to CURPIPE".

To write "1" to this bit after modifying the **PID** bit of the corresponding pipe from "BUF" to "NAK", check that "CSSTS=0" and "PBUSY=0", and then write the bit. However, since the controller has modified the **PID** bit to "NAK", it is not necessary to check the **PBUSY** bit.

Downloaded from Elcodis.com electronic components distributor

2.15.13 Sequence toggle bit set bit (SQSET)

If the software writes "1" to this bit, the controller writes the expected value sequence toggle bit of the pipe to DATA1. The controller always sets "0" to this bit.

Do not write "1" to the **SQCLR** bit and **SQSET** bit simultaneously.

Write "1" to this bit when "CSCTS=0", "PID=NAK" and "when not set to CURPIPE". To write "1" to this bit after the **PID** bit of the corresponding pipe is modified from "BUF" to "NAK", check that "CSSTS=0" and "PBUSY=0" and then modify the bit. However, if the controller modifies the **PID** bit to "NAK", it is not necessary to check the **PBUSY** bit.

2.15.14 Sequence toggle bit monitor bit (SQMON)

The controller sets the expected value of the sequence toggle bit of the pipe in this bit.

If a normal process is executed for the transaction, the controller toggles this bit. However, the bit is not toggled when a DATA-PID mismatch occurs during reception transfer.

When the Peripheral Controller function is selected, the controller writes "1" to this bit (writes the expected value to "1") when the Setup packet is received normally. When the Peripheral Controller function is selected, the controller does not refer to this bit during IN/OUT transaction of the status stage. It does not toggle the bit even if the process is completed normally.

2.15.15 Pipe busy bit (PBUSY)

The controller modifies this bit from "0" to "1" when the USB transaction of the pipe is started. This bit is modified from "1" to "0' when one transaction is complete.

When the software has written "PID=NAK", it is possible to check whether the pipe setting can be modified by reading this bit.

2.15.16 PING token issue enabled bit (PINGE)

When the Host Controller function is selected, if the software writes "1" to this bit, the controller issues a PING token during the transmission transfer. The transmission transfer starts from the PING transaction. When an ACK handshake is detected in the PING transaction, an OUT transaction is executed in the next transaction. When a NAK handshake is detected in the OUT transaction, a PING transaction is executed in the next transaction.

When the Host Controller function is selected, if the software writes "0" to this bit, the controller does not execute the PING token in the transmission transfer. The entire transmission transfer is executed in the OUT transaction.

This bit can be modified when "CSSTS=0" and "PID=NAK". To write "1" to this bit after modifying the **PID** bit of the corresponding pipe from "BUF" to "NAK", check that "CSSTS=0" and "PBUSY=0", and then write the bit. However, when the controller modifies the **PID** bit to "NAK", is it not necessary to check the **PBUSY** bit.

Downloaded from Elcodis.com electronic components distributor

2.15.17 Control transfer end enabled (CCPL)

When the Peripheral Controller function is selected, if the corresponding **PID** bit is "BUF" and the software writes "1" to this bit, the controller completes the control transfer stage. In other words, it transmits an ACK handshake for the OUT transaction from the USB Host during a Control Read Transfer, and transmits a zero-length packet for an IN transaction from the USB Host during a Control Write and No Data Control Transfer. However, irrespective of the setup value of this bit, the controller responds automatically from the Setup stage until the status stage is complete when a SET_ADDRESS request is detected.

When a new Setup packet is received, the controller modifies this bit from "1" to "0".

When "**VALID**=1", the software cannot write "1" to this bit.

When the Host Controller function is selected, write "0" to this bit.

2.15.18 Response PID bit (PID)

For this bit, while executing data stage or status stage of control transfer, use the software to modify this bit from "NAK" to "BUF".

2.15.18.1 When the Host Controller function is selected

Use the procedure below to modify this bit from "NAK" to "BUF":
(1) When setting transmission direction
When "UACT=1" and "PID=NAK", complete the write of transmission data in the FIFO buffer and then write "PID=BUF". Thereafter, the controller executes an OUT transaction (or PING transaction).
(2) When setting reception direction
When "UACT=1" and "PID=NAK", check to see that the FIFO buffer is empty (change the status to empty) and write "PID=BUF". Thereafter, the controller executes an IN transaction.

The controller changes the value of this bit in any of the following cases:
(1) When the software has written "BUF" to this bit and the controller receives the data exceeding the maximum packet size, the controller sets "PID=STALL(11)".
(2) When a reception error such as a CRC error has been detected three times continuously, the controller sets "PID=NAK".
(3) When a STALL handshake is received, the controller sets "PID=STALL(11)".

After an S-Split execution of a Split transaction in the pipe (when the controller sets CSSTS="1"), the controller executes the transaction until the C-Split ends, even if the software has modified this bit to "NAK". The controller sets "PID=NAK" when the C-Split ends.

2.15.18.2 When the Peripheral Controller function is selected

The controller modifies the bit value in the following cases:
(1) When the controller receives the Setup packet, the controller modifies this bit to "NAK" ("00"). Here, the controller sets "VALID=1" and the software cannot modify this bit until it writes "VALID=0".
(2) When the software writes "BUF" to this bit and the controller receives the data exceeding the maximum packet size, the controller sets "PID=STALL(11)".
(3) When the controller detects a control transfer sequence error, it sets "PID=STALL(1x)".
(4) When the controller detects a USB bus reset, it sets "PID=NAK".

During a SET_ADDRESS request process (auto process), the controller does not refer to the setup value of this bit.

Downloaded from Elcodis.com electronic components distributor

2.16 Pipe Configuration Register

Pipe1 - Pipe9 should be written to using the **PIPESEL**, **PIPECFG**, **PIPEBUF**, **PIPEMAXP**, **PIPEPERI**, **PIPExCTR**, **PIPExTRE** and **PIPExTRN** registers. After selecting the pipe using the **PIPESEL** register, write to the pipe functions using the **PIPECFG**, **PIPEBUF**, **PIPEMAXP** and **PIPEPERI** registers. The **PIPExCTR**, **PIPExTRE** and **PIPExTRN** registers can be written to separately from the pipe selection specified with the **PIPESEL** register, with no relation between them.

♦ Pipe window selection register [PIPESEL] <Address: 64H>

15	14	13	12	11	10	9	8	7	6	5	4	3	2	1	0
												PIPESEL			
? ?	? ?	? ?	? ?	? ?	? ?	? ?	? ?	? ?	? ?	? ?	? ?	0 -	0 -	0 -	0 -

Bit	Name	Function	Software	Hardware	Remarks
15-4	Unassigned. Fix to "0".				
3-0	PIPESEL Pipe window selection	Specifies pipe related to Address68H-6EH register. 0000: Not selected 0001: Pipe1 0010: Pipe2 0011: Pipe3 0100: Pipe4 0101: Pipe5 0110: Pipe6 0111: Pipe7 1000: Pipe8 1001: Pipe9	R/W	R	

Remarks
* When "PIPESEL=0000", "0" is read from all of the bits of the related registers noted above. When "PIPESEL=0000", write to the pipe related to Address68H-6EH register is invalid.

2.16.1 Pipe window selection bit (PIPESEL)

If the software writes "0001" to "1001" to this bit, the controller displays the pipe information and the setup value corresponding to the registers from address H68 to H6C. After pipe specification writing of this bit, the value written by the software in address H68 to H6C is reflected in the corresponding pipe transfer method.

If the software writes "0000" to this bit, the controller setss all "0" in the register from address H68 to H6C. Using software to write to address H68 to H6C is invalid.

Downloaded from Elcodis.com electronic components distributor

♦ Pipe configuration register [PIPECFG] <Address: 68H>

15	14	13	12	11	10	9	8	7	6	5	4	3	2	1	0
TYPE					BFRE	DBLB	CNTMD	SHTNAK			DIR	EPNUM			
0	0	?	?	?	0	0	0	0	?	?	0	0	0	0	0
-	-	?	?	?	-	-	-	-	?	?	-	-	-	-	-

Bit	Name	Function	Software	Hardware	Remarks
15-14	TYPE Transfer type	Specifies transfer type of pipe specified in PIPESEL bit. 00: Pipe use disabled 01: Bulk transfer 10: Interrupt transfer 11: Isochronous transfer	R/W	R	
13-11	Unassigned. Fix to "0".				
10	BFRE BRDY interrupt operation specified	Specifies the notification timing related to the pipe from the controller. 0: BRDY interrupt notification upon sending or receiving data 1: BRDY interrupt notification upon reading data	R/W	R	
9	DBLB Double buffer mode	Specifies whether the FIFO buffer used by the pipe is single buffer or double buffer. 0: Single buffer 1: Double buffer	R/W	R	
8	CNTMD Continuous transfer mode	Specifies whether to connect the pipe in continuous transfer mode. 0: Non-continuous transfer mode 1: Continuous transfer mode	R/W	R	
7	SHTNAK Pipe disabled at the end of transfer	For pipe reception direction, specifies whether to modify PID to NAK during transfer end. 0: Pipe continued at end of transfer 1: Pipe disabled at end of transfer	R/W	R	
6-5	Unassigned. Fix to "0".				
4	DIR Transfer direction	Specifies pipe transfer direction. 0: Receive 1: Transmit	R/W	R	
3-0	EPNUM Endpoint number	Specifies endpoint number of pipe.	R/W	R	

Remarks
None

Downloaded from Elcodis.com electronic components distributor

2.16.2 Transfer type bit (TYPE)

For this bit, write to USB transfer type of pipe (selected pipe) written to the PIPESEL bit. A list of transfer types that can be written to the selected pipe and this bit are shown in Table 2.15.

Table 2.15 List of Transfer Types That Can Be Written To The Selected Pipe & TYPE bit

Selected Pipe	TYPE Bit	USB Transfer Type
Pipe1 or Pipe2	"01" or "11"	Bulk or isochronous transfer
Pipe3 ~ Pipe5	"01"	Bulk transfer
Pipe6 ~ Pipe9	"10"	Interrupt transfer

Write a value other than "00" to this bit and then write "PID=BUF" (USB communication is started by writing "PID=BUF" when using the selected pipe).

This bit can be modified when the **PID** bit of the selected pipe is in "NAK" status. To modify this bit after chenging the PID bit of the selected pipe from "BUF" to "NAK", check that "CSSTS=0" and "PBUSY=0", and then modify the bit. However, when the controller modifies the **PID** bit to "NAK", it is not necessary to check the PBUSY bit.

2.16.3 BRDY interrupt operation specification bit (BFRE)

This bit is valid when the selected pipes are Pipe1 to Pipe5.

When the software has written "1" to this bit and the selected pipe is used in reception, (i.e. when "DIR bit=0" is written), the controller detects transfer completion and issues a **BRDY** interrupt when that packet is completely read. When the BRDY interrupt is issued with these settings, the software need not write "BCLR=1". The status of the FIFO buffer assigned to the selected pipe does not change to receive status until "BCLR=1".

The software writes "1" to this bit and the selected pipe is used in transmission, (in other words when "DIR bit=1" is written) the controller does not issue the **BRDY** interrupt. Refer to the **PIPEBRDY** interrupt register for details.

This bit can be modified when "CSSTS=0", "PID=NAK", and when the pipe is in the CURPIPE bit is not written. Execute USB communication by using the selected pipe, use the software to continuously write "ACLRM=1" and "ACLRM=0", clear the FIFO buffer assigned to the selected pipe, and then modify this bit in addition to the status of the above three registers.

To modify this bit after chenging the **PID** bit of the selected pipe from "BUF" to "NAK", check that "CSSTS=0" and "PBUSY=0", and modify the bit. However, when the controller has modified the **PID** bit to "NAK", it is not necessary to check the **PBUSY** bit.

Downloaded from Elcodis.com electronic components distributor

2.16.4 Double buffer mode bit (DBLB)

This bit is valid when the selected pipe is Pipe1 to Pipe5.

When the software writes "1" to this bit, for the selected pipe the controller assigns the FIFO buffer size equal to two sides specified by the **PIPEBUF** register **BUFSIZE** bit. In other words, the size of the FIFO buffer that is assigned by the controller to the selected pipe is given below.

(BUFSIZE+1)*64*(DBLB+1) [Byte]

When the software writes "1" to this bit, and the selected pipe is used in transmission (written to "DIR bit=1"), the controller does not issue a BRDY interrupt. Refer to the **PIPEBRDY** interrupt register for details.

This bit can be modified when "CSSTS=0", "PID=NAK", and when the pipe in the CURPIPE bit is not written. Execute USB communication using the selected pipe, use the software to continuously write "ACLRM=1" and "ACLRM=0", clear the FIFO buffer assigned to the selected pipe, and then modify this bit in addition to the status of the above three registers.

Check that "CSSTS=0" and "PBUSY=0", modify the **PID** bit of the selected pipe from "BUF" to "NAK" and then modify this bit. However, when the controller has modified the **PID** bit to "NAK", it is not necessary to use the software to check the **PBUSY** bit.

2.16.5 Continuous transfer mode bit (CNTMD)

This bit is valid when Pipe1 to Pipe5 are selected and the transfer type of the selected pipe is set to bulk.

According to the setup value of this bit, this controller determines transmission/reception completion for the FIFO buffer assigned to the selected pipe, as shown in Table 2.16.

Table 2.16 Relation Between Transmission/Reception Completion Determination for the CNTMD Setup Value and the FIFO Buffer

CNTMD bit Setup value	Read Possible status and method to determine transmission possibility
0	If the reception has been written ("DIR=0"), the condition when the status of the FIFO buffer changes to Read Possible. When the controller has received one packet.
	If transmission direction has been written ("DIR=1"), the condition when the status of the FIFO buffer changes to Transmission Possible. When following conditions are fulfilled: (1) The software (or DMAC) has written the data of maximum packet size in the FIFO buffer. (2) The software (or DMAC) has written the data of short packet (including the case of 0 byte) and "BVAL=1".
1	If the reception direction has been written ("DIR=0"), conditions for the FIFO buffer to change to Read Enabled status are: (1) When the number of bytes of received data in the specified FIFO buffer of the selected PIPE matches the set number of bytes ((BUFSIZE+1)*64) (2) When the controller receives a short packet other than a zero-length packet (3) When the contoller receives a Zero-Length packet even though data is already stored in the specified FIFO buffer of the selected PIPE. (4) When the controller receives packets as many as the transaction counter set for the selected pipe.
	If the transmission direction has been written ("DIR=1"), the condition when the status of the FIFO buffer changes to Transmission Possible. When (1), (2) or (3) from the following conditions is fulfilled: (1) When the data count written by the software (or DMAC) does not match with one side of FIFO buffer size assigned to the selected pipe. (2) When the software (or DMAC) writes the data (including 0 bytes) smaller than the data on one side of FIFO buffer assigned to the selected pipe and "BVAL=1". (3) When the software writes the data (including 0 bytes) smaller than the data on one side of FIFO buffer assigned to the selected pipe and asserts the DENDx_N signal simultaneously with write of the data for the last time.

This bit can be modified when "CSSTS=0", "PID=NAK", and when the pipe in the CURPIPE bit is not written to.

Downloaded from Elcodis.com electronic components distributor

Execute USB communication using the selected pipe, use the software to continuously write "ACLRM=1" and "ACLRM=0", clear the FIFO buffer assigned to the selected pipe, and then modify this bit in addition to the status of the above three registers.

To modify this bit after changing the PID bit of the corresponding pipe from "BUF" to "NAK", check that "CSSTS=0" and "PBUSY=0", and modify the bit. However, when the controller has modified the PID bit to "NAK", it is not necessary tto check the PBUSY bit.

Downloaded from Elcodis.com electronic components distributor

2.16.6 Pipe disabled at the end of transfer bit (SHTNAK)

This bit is valid when Pipe1 to Pipe5 are selected and is receiving. When the software has set "1" to this bit for the receiving pipe, when the transfer end is determined for the selected pipe, the controller modifies the **PID** bit of the selected pipe to "NAK". The controller determines transfer end when either one of the following conditions are fulfilled:
(1) When a short packet data (including a zero-length packet) is received normally.
(2) When a transaction counter is used and a packet of transaction counter portion is received normally.

This bit can be modified when "CSSTS=0" and "PID=NAK".

To modify this bit after changing the PID bit of the corresponding pipe from "BUF" to "NAK", check that "CSSTS=0" and "PBUSY=0", and modify the bit. However, when the controller has modified the PID bit to "NAK", it is not necessary to check the PBUSY bit.

Write "0" to this bit for the transmission direction pipe".

2.16.7 Transfer direction bit (DIR)

When the software has written "0" to this bit and the controller has set the selected pipe to receive and "1" is written to this bit, the controller uses the selected pipe in transmission.

This bit can be modified when "CSSTS=0", "PID=NAK", and when the pipe in the CURPIPE bit is not written. Execute USB communication using the selected pipe, use the software to continuously write "ACLRM=1" and "ACLRM=0", clear the FIFO buffer assigned to the selected pipe, and then modify this bit in addition to the status of the above three registers.

To modify this bit after changing the PID bit of the corresponding pipe from "BUF" to "NAK", check that "CSSTS=0" and "PBUSY=0", and modify the bit. However, when the controller has modified the PID bit to "NAK", it is not necessary to check the PBUSY bit.

2.16.8 Endpoint number bit (EPNUM)

In this bit, use the software to write the endpoint number related to the selected pipe. However, writing "0000" indicates that the pipe is not being used.

This bit can be modified when "CSSTS=0", "PID=NAK", and when the in the **CURPIPE** bit is not written.

To modify this bit after changing the PID bit of the corresponding pipe from "BUF" to "NAK", check that "CSSTS=0" and "PBUSY=0", and modify the bit. However, when the controller has modified the PID bit to "NAK", it is not necessary to check the **PBUSY** bit.

Set the combination of the **DIR** bit and **EPNUM** bit so that they are not duplicated with the other pipe settings ("EPNUM=000" (selected pipe not used) settings can be duplicated).

Downloaded from Elcodis.com electronic components distributor

♦ Pipe buffer specification register [PIPEBUF] <Address: 6AH>

15	14	13	12	11	10	9	8	7	6	5	4	3	2	1	0
	BUFSIZE							BUFNMB							
? ?	0 -	0 -	0 -	0 -	0 -	? ?	? ?	0 -	0 -	0 -	0 -	0 -	0 -	0 -	0 -

Bit	Name	Function	Software	Hardware	Remarks
15	Unassigned. Fix to "0".				
14-10	BUFSIZE Buffer size	Specifies the FIFO buffer size of pipe specified in PIPESEL bit. 0x00: 64 bytes 0x01: 128 bytes ... 0x1F: 2Kbytes)	R/W	R	
9-8	Unassigned. Fix to "0".				
7-0	BUFNMB Buffer number	Specifies the pipe FIFO buffer number. (0x4 - 0x87)	R/W	R	

Remarks
* Not modify each bit in the register except when the status of the software is "CSSTS=0", "PID=NAK" and the pipe is not set in the CURPIPE bit.
* To modify each bit in the register after changing the PID bit of the selected pipe from "BUF" to "NAK" check that "CSSTS=0" and "PBUSY=0", and modify the bit. However, when the controller has modified the PID bit to "NAK", it is not necessary to check the PBUSY bit.

2.16.9 Buffer size bit (BUFSIZE)

In this bit, write to the FIFO buffer size to be assigned to the pipe. It is measured in blocks, and one block is 64 bytes. When the software has written "DBLB=1", the controller assigns two sides of the FIFO buffer specified by this bit for the selected pipe. The size of the FIFO buffer that is assigned by the controller to the selected pipe is given below:
(BUFSIZE+1)*64*(DBLB+1) [Byte]

For this bit, set the values in the following range:
(1) When Pipe1 to Pipe5 are selected, the value from 0x0 to 0x1F can be written.
(2) When Pipe6 to Pipe9 are selected, only 0x0 can be written.

If writing "CNTMD=1", write the value of the integral multiple of the maximum packet size in the BUFSIZE bit.

2.16.10 Buffer number bit (BUFNMB)

Specify the first block number from the FIFO buffer to be assigned to the pipe. The block of the FIFO buffer assigned for the selected pipe by the controller is given below:

Block number: BUFNMB~block number: BUFNMB+(BUFSIZE+1)*(DBLB+1)-1

For this bit, write the values within the range from 0 (0x00) to 8640 (0x87). However, observe the following conditions:
0x00-0x03 are exclusive to DCP.
0x04 is the dedicated Pipe6. However, when Pipe6 is not used, it can be used by other pipes. When the selected pipe is Pipe6, write to this bit is disabled. The controller automatically assigns "BUFNMB=0x04" to Pipe6.
0x05 is the dedicated Pipe7. However, when Pipe7 is not used, it can be used by other pipes. When the selected pipe is Pipe7, write to this bit is disabled. The controller automatically assigns "BUFNMB=0x05" to Pipe7.
0x06 is the dedicated Pipe8. However, when Pipe8 is not used, it can be used by other pipes. When the selected pipe is Pipe8, write to this bit is disabled. The controller automatically assigns "BUFNMB=0x06" to Pipe8.
0x07 is the dedicated Pipe9. However, when Pipe9 is not used, it can be used by other pipes. When the selected pipe is Pipe9, write to this bit is disabled. The controller automatically assigns "BUFNMB=0x07" to Pipe9.

Downloaded from Elcodis.com electronic components distributor

♦ Pipe maximum packet size register [PIPEMAXP] <Address: 6CH>

15	14	13	12	11	10	9	8	7	6	5	4	3	2	1	0
DEVSEL					MXPS										
0 -	0 -	0 -	0 -	? ?	0 -	0 -	0 -	0 -	0(1) -	0 -	0 -	0 -	0 -	0 -	0 -

Bit	Name	Function	Software	Hardware	Remarks
15-12	DEVSEL Device select	Specifies the device address of the Peripheral when the Host Controller function is selected. 0000:Address"0000" 0001:Address"0001" ... 1001:Address"1001" 1010:Address"1010" 1011 – 1111: Reserved	R/W	R	H (Write all "0" when P)
11	Unassigned. Fix to "0".				
10-0	MXPS Maximum packet size	Specifies maximum data payload (maximum packet size) of the pipe. Pipe6 – Pipe9 can be written from 0x1 to 0x40 bytes.	R/W	R	

Remarks
* The default value of the **MXPS** bit is "0x00" when the **PIPESEL** register **PIPESEL** pipe is not selected, and "0x40" when selected.

2.16.11 Device select bit (DEVSEL)

When the Host Controller function is selected, set the USB device address of the communication partner in this bit.

Before write to this bit, the **DEVADDx** register corresponding to the setup value of this bit is written to. For example, write to the **DEVADD2** address of the H'D4 address in order to write "DEVSEL=0010".

Not write to this bit except when "CSSTS=0" and "PID=NAK". To modify this bit after changing the **PID** bit of the pipe from "BUF" to "NAK", check that "CSSTS=0" and "PBUSY=0", and then modify the bit. However, when the controller has modified the PID bit to "NAK", it is not necessary to check the **PBUSY** bit.

When the Peripheral Controller function is selected, write "0000" to this bit.

2.16.12 Maximum packet size bit (MXPS)

In this bit, write the maximum data payload (maximum packet size) of the selected pipe. For Pipe1 and Pipe2, the value from 1 byte (0x1) to 1024 bytes (0x400) can be written. For Pipe3 to Pipe5, values of 8 bytes (0x8), 16 bytes (0x10), 32 bytes (0x20), 64 bytes (0x40) and 512 bytes (0x200) can be written (the [2:0] bit does not exist). For Pipe6 to Pipe9, values from 1 byte (0x1) to 64 bytes (0x40) can be written.

The default value is 0x40 (64 bytes).

In the **MXPS** bit, write the values based on the USB Specification Revision 2.0 for each transfer type. While transmitting isochronous pipe in Split-Transaction, write the value to less than 188 bytes in the **MXPS** bit. Not write the **MXPS** bit except when "CSSTS=0", "PID=NAK" and values are not set in the **CURPIPE** bit. To modify this bit after chenging the PID bit of the pipe from "BUF" to "NAK", check that "CSSTS=0" and "PBUSY=0", and modify the bit. However, when the controller has modified the PID bit to "NAK", it is not necessary to check the PBUSY bit.

When "MXPS=0", do not write anything in the FIFO buffer and do not write "PID=BUF".

Downloaded from Elcodis.com electronic components distributor

♦ Pipe timing control register [PIPEPERI] <Address: 6EH>

15	14	13	12	11	10	9	8	7	6	5	4	3	2	1	0
			IFIS										IITV		
? ?	? ?	? ?	0 -	? ?	? ?	? ?	? ?	? ?	? ?	? ?	? ?	? ?	0 -	0 -	0 -

Bit	Name	Function	Software	Hardware	Remarks
15-13	Unassigned. Fix to "0".				
12	IFIS Isochronous IN buffer flush	Specifies buffer flushed/not-flushed when the transfer type of pipe specified in PIPESEL bit is isochronous IN. 0: The buffer is not flushed 1: The buffer is flushed	R/W	R	P (Write to "0" when H)
11-3	Unassigned. Fix to "0".				
2-0	IITV Interval error detection spacing	Specifies the transfer interval timing of pipe as second power frame timing.	R/W	R	

Remarks
None

2.16.13 Isochronous IN buffer flush bit (IFIS)

This is the function in which the controller automatically clears the FIFO buffer when the Peripheral Controller function is selected, if transfer type isochronous pipe, transfer is IN transfer, and when the controller has not received the In-token from the USB Host in the (micro) frame for each interval specified in IITV bit. In the double buffer setting (write "DBLB=1"), the controller clears only the data on one side of the previous buffer. The FIFO buffer is cleared when the SOF packet is received immediately after the (micro) frame receives the In-token. It is cleared also when the SOF packet is corruped when the SOF is to be received by an internal interpolation function.

When the Host Controller function is selected, write "0" to this bit. If the selected pipe of other than transfer type isochronous, write "0" to this bit.

2.16.14 Interval error detection spacing bit (IITV)

In this bit, specify the interval error detection spacing to frame timing squared. The functional details differ when the Host Controller function and Peripheral Controller function are selected (to be mentioned later).

Not write to this bit except when "CSSTS=0", "PID=NAK", and when the pipe in the **CURPIPE** bit is not written. To modify this bit after chenging the **PID** bit of the pipe from "BUF" to "NAK", check that "CSSTS=0" and "PBUSY=0", and then modify the bit. However, when the controller has modified the **PID** bit to "NAK", it is not necessary to check the **PBUSY** bit.

When modifying the bit value, after execute USB communication, write "ACLRM=1" after writing "PID=NAK", and initialize the interval timer.

This bit does not exist in Pipe3 to Pipe5. Set "0" in the position of the bit corresponding to Pipe3 to Pipe5.

Downloaded from Elcodis.com electronic components distributor

2.16.14.1 When the Host Controller function is selected

In case of isochronous or Interrupt transfer type of the selected pipe, values can be written to this bit. The controller controls the token issue interval by the setup value of this bit. The controller issues a token for the selected pipe in one interval with a (micro) frame for 2^IITV times.

The controller counts the interval in 1ms frames for the pipe used during the communication between Full-/Low-Speed Peripheral Devices connected to a Hi-Speed HUB.

The controller starts counting the token issue spacing from the next (micro) frame after the software writes the **PID** bit to "BUF".

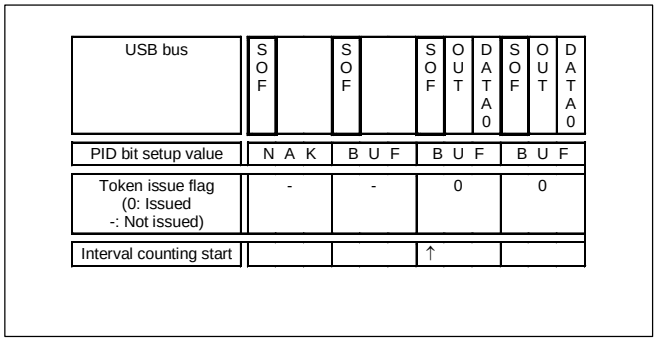

Figure 2.1 Token issue flag when "IITV=0"

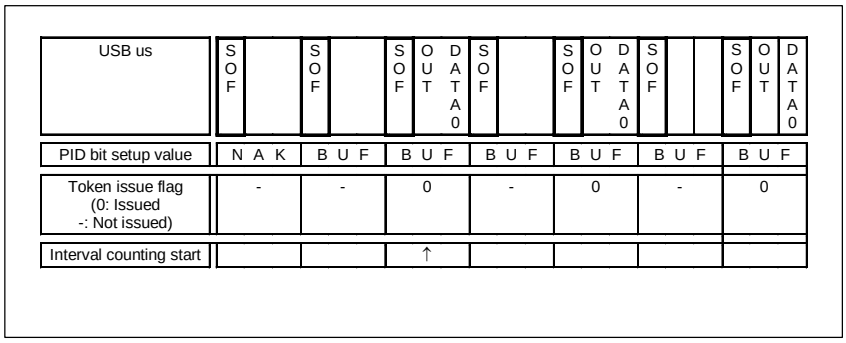

Figure 2.2 Token issue flag when "IITV=1"

If the transfer type of the selected pipe is an isochronous or interrupt, the controller executes the following operations along with the control of the token issue interval. If the transfer type is isochronous, the controller also issues the token when the **NRDY** interrupt issue conditions are fulfilled.

(1) If the selected pipe is isochronous-IN transfer pipe

When an In-token is issued and the packet is not received normally from the Peripheral device (if there is no response or packet error), an **NRDY** interrupt is issued.

Since the FIFO buffer is full (due to reasons like the reading of data from FIFO buffer by the software (DMAC) is slow), the controller sets "1" to the **OVRN** bit and issues the **NRDY** interrupt when it cannot receive the data and reaches the In-token issue timing.

(2) If the selected pipe is an isochronous-Out transfer pipe

When the FIFO buffer contains no data that can be sent (due to reasons like the writing of data in FIFO buffer by the software (DMAC) is slow) and it reaches the Out-token issue timing, the controller displays "1" in the OVRN bit, issues the NRDY interrupt and a zero-length packet is sent.

Downloaded from Elcodis.com electronic components distributor

The following are the conditions for resetting the token issuing interval:
(1) When the controller is hardware reset (the setup value of **IITV** is also cleared to"0".)
(2) When the software writes "ACLRM=1".

Downloaded from Elcodis.com electronic components distributor

2.16.14.2 When the Peripheral Controller function is selected

If the selected pipe transfer type is isochronous, this bit can be written to.

(1) If the selected pipe is an isochronous-OUT transfer pipe
When the data packet is received in the (micro) frame for each interval set in **IITV** bit, the controller issues a **NRDY** interrupt. A **NRDY** interrupt is also issued when the data packet is not received due to errors such as a CRC error or (due to reasons like the reading of data from FIFO buffer by the software (DMAC) is slow) when the controller cannot receive the data because the FIFO buffer is full. A **NRDY** interrupt is issued when the SOF packet is received.

Also, when the SOF packet is corrupted, the interrupt is issued when the SOF packet is to be received by an internal interpolation function. However, if other than "IITV=0", a **NRDY** interrupt is to be issued when the SOF packet is received for each interval after starting interval counting.

After activating the interval timer, when the PID bit is written to "NAK" by the software, the controller does not issue the NRDY interrupt even if the SOF packet is received.

The count start conditions of the interval differ according to the setup value of the **IITV** bit

(a) If "IITV=0": Counting of the interval is started from the next (micro) frame after modifying the PID bit of the selected pipe to "BUF".

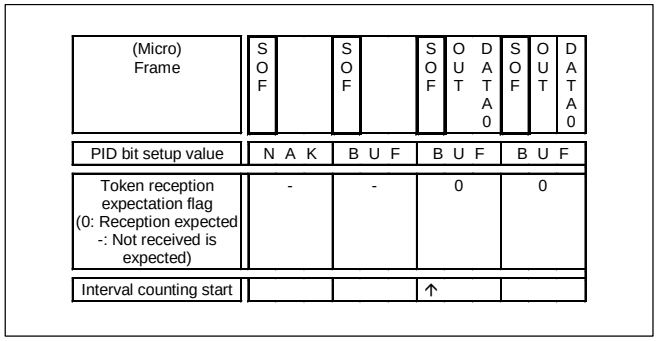

Figure 2.3 Correlation between (micro) frame and token reception expectation flag when "IITV=0"

(b) If other than "IITV=0": Counting of interval is started when the initial DATA packet is received normally after modifying the PID bit of the selected pipe to "BUF".

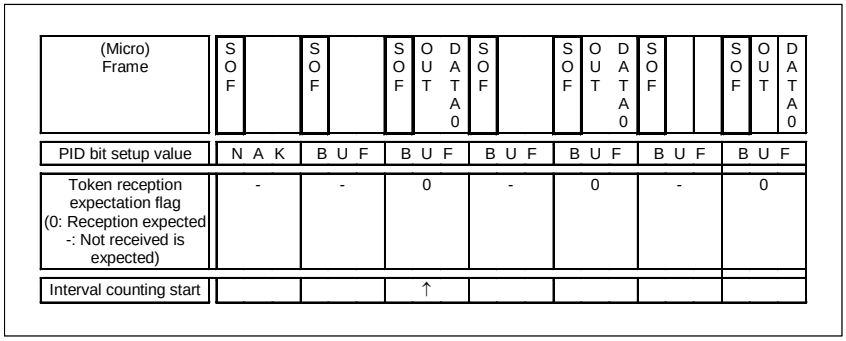

Figure 2.4 Correlation between (micro) frame and token reception expectation flag when "IITV=0"

Downloaded from Elcodis.com electronic components distributor

(2) When the selected pipe is an isochronous IN transfer pipe
It is used in combination with "IFIS="1". If "IFIS=0", a data packet is sent as a response to the received token, irrespective of the setup value of the IITV bit.

If "IFIS=1" is written, the controller clears the FIFO buffer when the FIFO buffer does not contain the data that can be sent, and the In-token is not received in the (micro) frames of each interval set in the IITV bit. It also clears the buffer when the In-token is not received normally due to bus errors, such as a CRC error. The FIFO buffer is cleared when the SOF packet is received. Also, when the SOF packet is corrupted, the FIFO buffer is cleared when the SOF packet is to be received by internal interpolation function.

Conditions to start the interval counting differ according to the setup value of IITV bit (similar for OUT).

The following are the conditions for counting the interval when the Peripheral Controller function is selected:
(a) When this controller is hardware reset (at this point, the setup value of the **IITV** bit is also cleared to"0").
(b) When the software writes "ACLRM=1".
(c) When the controller detects a USB reset.

Downloaded from Elcodis.com electronic components distributor

2.17 Pipe Control Register

- ♦ Pipe1 control register [PIPE1CTR] <Address: 70H>
- ♦ Pipe2 control register [PIPE2CTR] <Address: 72H>
- ♦ Pipe3 control register [PIPE3CTR] <Address: 74H>
- ♦ Pipe4 control register [PIPE4CTR] <Address: 76H>
- ♦ Pipe5 control register [PIPE5CTR] <Address: 78H>

15	14	13	12	11	10	9	8	7	6	5	4	3	2	1	0
BSTS	INBUFM	CSSLR	CSSTS		ATREPM	ACLRM	SQCLR	SQSET	SQMON	PBSY				PID	
0	0	0	0	?	0	0	0	0	0	0	?	?	?	0	0
-	-	-	-	?	-	-	-	-	-	-	?	?	?	0	0

Bit	Name	Function	Software	Hardware	Remarks
15	BSTS Buffer status	The FIFO buffer status of the pipe is shown. 0: Buffer access is disabled 1: Buffer access is enabled	R	W	
14	INBUFM Sending buffer monitor	When the pipe is transmitting, the FIFO buffer status of the pipe is shown. 0: FIFO buffer contains no transmittable data 1: FIFO buffer contains transmittable data	R	W	
13	CSCLR CSPLIT status clear bit	Write CSCLR=1 to clear the CSSTS bit of the pipe. 0: Write invalid 1: Clear CSSTS bit	R/W(1)	R/W(0)	H (Set to "0" when P)
12	CSSTS CSSTS status bit	C-Split status of split transaction of the pipe is shown. 0: During the S-Split transaction process or transfer without using a split transaction 1: During the C-Split transaction process	R	R/W	H
11	Unassigned. Fix to "0".				
10	ATREPM Auto response mode	Specifies auto response is disabled/enabled for the pipe. 0: disabled 1: enabled (irrespective of the FIFO buffer status of the pipe, a zero-length packet response while sending, NAK response and a NRDY interrupt is issued while receiving)	R/W	R	P (Set to "0" when H)
9	ACLRM Auto buffer clear mode	Specifies auto buffer clear mode is disabled/enabled of the pipe. 0: Disabled 1: Enabled (all buffers are initialized)	R/W	R	
8	SQCLR Toggle bit clear	Specifies "1" while clearing the expected value of the sequence toggle bit in the next transaction of the pipe, to DATA0. 0: Write invalid 1: Specifies DATA0	R(0)/W(1)	R	
7	SQSET Toggle bit set	Specifies "1" while clearing the expected value of the sequence toggle bit in the next transaction of the pipe, to DATA1. 0: Write iis nvalid 1: Specifies DATA1	R(0)/W(1)	R	
6	SQMON Toggle bit confirm	Sets the expected value of the sequence toggle bit in the next transaction of the pipe. 0: DATA0 1: DATA1	R	W	
5	PBUSY Pipe busy	Sets whether the pipe is being used by the current USB bus. 0: Pipe not used in the USB bus 1: Pipe used in the USB bus	R	W	
4-2	Unassigned. Fix to "0".				
1-0	PID Response PID	Specifies the response method in the next transaction of the pipe. 00: NAK response 01: BUF response (maintaining the buffer state) 10: STALL response 11: STALL response	R/W	R/W	

Remarks
None

Downloaded from Elcodis.com electronic components distributor

2.17.1 Buffer status bit (BSTS)

This is the bit by which the controller displays whether access from the CPU to the FIFO buffer assigned to the pipe is possible. The meaning of this bit differs according to the setup value of the **DIR**, **BFRE** and **DCLRM** bits.

Table 2.17 BSTS Bit Operations

DIR Bit Setup Value	BFRE bit Setup Value	DCLRM Bit Setup Value	Meaning of BSTS bit
0	0	0	Sets "1" "when reading of the reception data of the FIFO buffer is possible" and sets "0" when the data is read completely.
		1	This combination cannot be written.
	1	0	Sets "1" "when reading of the reception data of the FIFO buffer is possible" and sets "0" when the software writes "BCLR=1" after reading the data completely.
		1	Sets "1" "when reading of the reception data of the FIFO buffer is possible" and sets "0" when the data is read completely.
1	0	0	Sets "1" "when writing of the transmission data to the FIFO buffer is possible" and sets "0" when the data is written completely.
		1	This combination cannot be written.
	1	0	This combination cannot be written.
		1	This combination cannot be written.

2.17.2 Sending buffer monitor bit (INBUFM)

When the pipe is set to transmit ("DIR=1"), the controller sets "1" to this bit when the software (or DMAC) writes the data on at least one side in the FIFO buffer. The controller sets "0" in this bit when all the written data is transmitted from the FIFO buffer. When the double buffer is used (if "DBLB=1" is written), "0" is displayed in this bit when the controller has transmitted the data on both the sides and the software (or DMAC) has not completely written the data on one side.

When the pipe is set to receive ("DIR=0"), this bit shows a value similar to the **BSTS** bit.

2.17.3 CSPLIT status clear of split transaction bit (CSCLR)

When the Host Controller function is selected, if the software writes "1" to this bit, the controller clears the CSSTS bit to "0". In using the Split Transaction transfer, if the next transfer is restarted forcefully from the S-Split, use the software to write "1" to this bit. Normally in a Split Transaction, since the controller automatically clears the CSSTS bit to "0" when the C-Split is completed, software is not necessary for the clear process.

Not modify the **CSSTS** bit by using this bit except when the communication is stopped by "UACT=0" or when confirmed that transfer is not complete due to detach detection.

"CSSTS=0" is not modified even if writing "1" to this bit when "CSSTS=0".

When the Peripheral Controller function is selected, write "0" to this bit.

2.17.4 CSPLIT status of split transaction bit (CSSTS)

When the Host Controller function is selected, the controller displays the C-Split status of the Split transaction in this bit.

The controller sets "1" in this bit while starting the C-Split and sets "0" in this bit when the C-Split end is detected.

The setting of this bit shows the valid values only when the Host Controller function is selected.

Downloaded from Elcodis.com electronic components distributor

2.17.5 Auto response mode bit (ATREPM)

If the Peripheral Controller function is selected, when the transfer type of thepipe is written to "BULK", "1" can be written to this bit. When "1" is written to this bit, the controller responds as shown below for the token from the USB Host.

(1) If pipe of Bulk-IN transfer (write "TYPE=01" and "DIR=1")
If writing "ATREPM=1" and "PID=BUF", the controller sends a zero-length packet for the token. Whenever an acknowledgement is received from the USB Host (If there is one transaction, the token received → zero-length packet sent → ACK received), the controller updates the sequence toggle bit (DATA-PID). **BRDY** and **BEMP** interrupts do not occur.

(2) If pipe of Bulk-OUT transfer (set "TYPE=01" and "DIR=0")
If writing "ATREPM=1" and "PID=BUF", the controller sends a NAK response for the OUT-token (or PING-token) and issues an **NRDY** interrupt.

This bit can be modified when "CSSTS=0" and "PID=NAK". To modify this bit after modifying the **PID** bit of the pipe from "BUF" to "NAK", check that "CSSTS=0" and "PBUSY=0" and then modify the bit. However, when the controller has modified the **PID** bit to "NAK", it is not necessary to check the **PBUSY** bit.

When writing "1" to this bit to execute USB communication, the FIFO buffer should be empty. While "1" is written to this bit to execute USB communication, do not write to the FIFO buffer.

If the transfer type of the pipe is isochronous,write "0" to this bit.

When the Host Controller function is selected, write "0" to this bit.

2.17.6 Auto buffer clear mode bit (ACLRM)

To delete all content from the FIFO buffer allocated to the pipe, write "1" and "0" sequentially in the **ACLRM** bit. When "1" and "0" are written sequentially in this bit, the contents to be cleared by the controller and the instances when the items need to be cleared are shown in Table 2.18.

Table 2.18 Contents Cleared by the Controller if writing "ACLRM=1" settings

No.	Contents cleared by ACLRM bit operation	Instances when clearing the contents is necessary
(1)	All contents of the FIFO buffer allocated to the pipe (clear both sides of the FIFO buffer while settingto the double buffer)	
(2)	Interval count value, if transfer type of the pipe is isochronous	To reset the interval count value
(3)	Internal flag related to **BFRE** bit	When modifying the **BFRE** bit setup value
(4)	FIFO buffer toggle control	When modifying the **DBLB** bit setup value
(5)	Internal flag related to the transaction count	If there is a forceful termination of transaction count function

This bit can be modified when "CSSTS=0", "PID=NAK", and when the pipe in the **CURPIPE** bit is not written. To modify this bit after modifying the pipe **PID** bit from "BUF" to "NAK", check that "CSSTS=0" and "PBUSY=0", and then modify it. However, when the controller has modified the **PID** bit to "NAK", it is not necessary to check the **PBUSY** bit.

Downloaded from Elcodis.com electronic components distributor

2.17.7 Clear bit of sequence toggle bit (SQCLR)

If the software writes "1" to this bit, the controller writes the expected value of the sequence toggle bit of the pipe to DATA0. The controller always sets "0" to this bit.

When the Host Controller function is selected, if "1" is written to this bit for the Bulk-Out transfer pipe, the controller starts the next transfer of the pipe from the PING-token. Not write "1" to the **SQCLR** bit except when "CSSTS=0" and "PID=NAK". To write "1" to this bit after the **PID** bit of the PIPE is modified from "BUF" to "NAK", check that "CSSTS=0" and "PBUSY=0" and then modify the bit. However, when the controller has modified the PID bit to "NAK", it is not necessary to check the **PBUSY** bit.

2.17.8 Write bit of sequence toggle bit (SQSET)

If the software writes "1" to this bit, the controller sets the expected value sequence toggle bit of the pipe to DATA1. The controller always sets "0" to this bit.

Not write "1" to the **SQSET** bit except when "CSSTS=0" and "PID=NAK". To write "1" to this bit after the **PID** bit of the PIPE is modified from "BUF" to "NAK", check that "CSSTS=0" and "PBUSY=0", and then modify the bit. However, when the controller has modified the PID bit to "NAK", it is not necessary to check the **PBUSY** bit.

2.17.9 Monitor bit of sequence toggle bit (SQMON)

In this bit, the controller displays the expected value of the sequence toggle bit of the pipe.

If the selected pipe other than transfer type isochronous, the controller toggles this bit if the transaction is executed normally. However, this bit is not toggled if there is a DATA-PID mismatch during reception direction transfer.

2.17.10 Pipe busy bit (PBUSY)

The controller modifies this bit from "0" to "1" when the USB transaction of the pipe is started. When one transaction is completed, the bit is modified from "1" to "0".

When the software has set "PID=NAK", possibility of pipe modification can be checked by reading this bit.

Downloaded from Elcodis.com electronic components distributor

2.17.11 Response PID bit (PID)

For this bit, set a response of the controller in each pipe by the software.

The default value of this bit is "NAK". While executing a USB transfer by the pipe, modify this bit to "BUF". The basic operations (operations when there is no error in the communication packet) of this controller for each setup value of the PID bit are given in Table 2.19 and Table 2.20.

If the pipe is in USB communication, when this bit is modified from "BUF" to "NAK" by the software, after writing "NAK", to check whether the USB transfer of pipe is actually shifted to "NAK" status, and check whether "PBUSY=1". However, when the controller modifies this bit to "NAK", it is not necessary to use the software to check the **PBUSY** bit.

In following cases, the controller modifies the value of this bit:
(1) When the pipe is receiving and when the software has written "1" to the **SHTNAK** bit of the pipe, the controller sets "PID=NAK" upon identifying the transfer end.
(2) For the pipe, when the data packet of payload exceeding the maximum packet size is received, the controller sets "PID=STALL(11)".
(3) When the Peripheral Controller function is selected and when the USB bus reset is detected, the controller sets "PID=NAK".
(4) When the Host Controller function is detected and when a reception error such as a CRC error is detected continuously three times, the controller sets "PID=NAK".
(5) When the Host Controller function is selected and when a STALL handshake is received, the controller sets "PID=STALL(11)".

Write "10" to shift from "PID=NAK("00")" status to "PID=STALL" status. Write "11" to shift from BUF("01") status to STALL status. First write "10" and then write "00" to shift form "STALL(11)" to NAK status. First, shift to NAK status and then to BUF status to shift from STALL status to BUF status.

Downloaded from Elcodis.com electronic components distributor

Table 2.19 List of Controller Operations According to the PID bit (When the Host Controller function is selected)

PID Bit Setup Value	Transfer TYPE (TYPE Bit Setup Value)	Controller Operations According Transfer Direction (DIR Bit Setup Value)	Controller Operations
"00 (NAK)"	Not dependent on setup value	Not dependent on setup value	Token not issued.
"01 (BUF)"	Bulk ("TYPE=01") or Interrupt ("TYPE=10")	Not dependent on setup value	Token is issued when "UACT=1" is written, and when the FIFO buffer of the pipe is in Send/Receive Enabled status. Token not issued when "UACT=0" or the status is other than Send/Receive Enabled.
	Isochronous ("TYPE=11")	Not dependent on setup value	A token is issued when "UACT=1" is written, regardless of the state of the FIFO buffer that corresponds to the selected PIPE. A token is not issued if "UACT=0".
"10 (STALL)" or "11 (STALL)"	Not dependent on setup value	Not dependent on setup value	Token not issued

Table 2.20 List of Controller Operations According to the PID bit (When the Peripheral Controller function is selected)

PID Bit Setup Value	Transfer TYPE (TYPE Bit Setup Value)	Transfer Direction (DIR Bit Setup Value)	Controller Operations
"00 (NAK)"	Bulk ("TYPE=01") or Interrupt ("TYPE=10")	Not dependent on setup value	NAK response is sent to the token from the USB Host. However, when "ATREPM=1", operations mentioned in 2.17.5 are executed.
	Isochronous ("TYPE=11")	Not dependent on setup value	Does not respond to the token from the USB Host
	Pipe use disabled ("TYPE=00")	Not dependent on setup value	Does not respond to the token from the USB Host
"01 (BUF)"	Bulk ("TYPE=01")	Receive ("DIR=0")	When an OUT token is sent from the USB Host, if the FIFO buffer for the selected PIPE is in the receive-enabled state, the data is received and an ACK or NYET response is returned. If not, a NAK response is returned. When a PING token is sent from the USB Host, if the FIFO buffer of the selected PIPE is in the receive-enabled state, an ACK response is returned. If not, a NAK response is returned.
	Interrupt ("TYPE=10")	Receive ("DIR=0")	For the Out-token from the USB Host, if the FIFO buffer of the pipe is in Receive Enabled status, the data is received and an ACK response is sent. Otherwise the NAK response is sent.
	Bulk ("TYPE=01") or Interrupt ("TYPE=10")	Transmit ("DIR=1")	If the corresponding FIFO buffer is in Send Possible status, the data is sent for the token from the USB. Otherwise a NAK response is sent.
	Isochronous ("TYPE=11")	Receive ("DIR=0")	For the Out-token from the USB Host, if the FIFO buffer of the pipe is in Receive Enabled status, the data is received. Otherwise, the data is deleted.
		Transmit ("DIR=1")	If the corresponding FIFO buffer is in Send Possible status, the data is sent for the token from the USB. Otherwise, a zero-length packet is sent.
"10 (STALL)" or "11 (STALL)"	Bulk ("TYPE=01") or Interrupt ("TYPE=10")	Not dependent on setup value	A STALL response is sent to the token from the USB Host.
	Isochronous ("TYPE=11")	Not dependent on setup value	Does not respond to the token from the USB Host.

Downloaded from Elcodis.com electronic components distributor

♦ Pipe6 control register [PIPE6CTR] <Address: 7AH>
♦ Pipe7 control register [PIPE7CTR] <Address: 7CH>
♦ Pipe8 control register [PIPE8CTR] <Address: 7EH>
♦ Pipe9 control register [PIPE9CTR] <Address: 80H>

15	14	13	12	11	10	9	8	7	6	5	4	3	2	1	0
BSTS		CSSLR	CSSTS			ACLRM	SQCLR	SQSET	SQMON	PBSY				PID	
0 -	? ?	0 -	0 -	? ?	? ?	0 -	0 -	0 -	0 -	0 -	? ?	? ?	? ?	0 0	0 0

Bit	Name	Function	Software	Hardware	Remarks
15	BSTS Buffer status	FIFO buffer status of the pipe is displayed. 0: Buffer access is disabled 1: Buffer access is enabled	R	W	
14	Unassigned. Fix to "0".				
13	CSCLR CSPLIT status clear bit	Write CSCLR=1 to clear the CSSTS bit of the pipe. 0: Write disabled 1: Clear CSSTS bit	R/W(1)	R/W(0)	H (Write to "0" when P)
12	CSSTS CSSTS status bit	C-SPLIT status of Split transaction of the pipe is displayed. 0:During S-Split Transaction process or transfer without using Split Transaction 1: During C-Split Transaction process	R	R/W	H
11-10	Unassigned. Fix to "0".				
9	ACLRM Auto Buffer Clear mode	Specifies auto buffer clear mode disable/enable of the pipe. 0: Disabled 1: Enabled (all buffers are initialized)	R/ W	R/W	
8	SQCLR Toggle Bit Clear	Specifies "1" while clearing the expected value of the sequence toggle bit in the next transaction of the pipe to DATA0. 0: Invalid 1: Specifies DATA0	R(0)/ W(1)	R	
7	SQSET Toggle Bit Set	Specifies "1" while clearing the expected value of the sequence toggle bit in the next transaction of the pipe to DATA1. 0: Invalid 1: Specifies DATA1	R(0)/ W(1)	R	
6	SQMON Toggle Bit Confirm	Sets the expected value of the sequence toggle bit in the next transaction of the pipe. 0: DATA0 1: DATA1	R	W	
5	PBUSY Pipe busy	Displays whether the pipe is being used by the current USB bus. 0: Pipe not used in the USB bus 1: Pipe used in the USB bus	R	W	
4-2	Unassigned. Fix to "0".				
1-0	PID Response PID	Specifies the response method in the next transaction of the pipe. 00: NAK response 01: BUF response (in keeping with the buffer state) 10: STALL response 11: STALL response	R/W	R/W	

Remarks
None

Downloaded from Elcodis.com electronic components distributor

2.17.12 Buffer status bit (BSTS)

Refer to 2.17.1.

2.17.13 CSPLIT status clear bit of split transaction (CSCLR)

Refer to 2.17.3.

2.17.14 Split Transaction C-SPLIT status bit of split transaction (CSSTS)

Refer to 2.17.4.

2.17.15 Auto buffer clear mode (ACLRM)

To delete all content from the FIFO buffer allocated to the pipe, write "1" and "0" sequentially in the **ACLRM** bit. When "1" and "0" are written sequentially to this bit, the contents to be cleared by the controller and the cases when the items need to be cleared are shown in Table 2.21.

Table 2.21 Contents cleared by the controller if writing "ACLRM=1"

No.	Contents cleared by ACLRM bit operation	Instances when clearing the contents is necessary
(1)	All content from the FIFO buffer allocated to the pipe	
(2)	When the Host Controller function is selected, interval count value if the pipe of transfer type interrupt	To reset the value of interval count
(3)	Internal flag related to **BFRE** bit	While modifying the **BFRE** bit setup value
(4)	Internal flag related to transaction count	If there is a forceful termination of transaction count function

This bit can be modified when "CSSTS=0", "PID=NAK", and the pipe in the **CURPIPE** bit is not written. To modify this bit after modifying the **PID** bit of the pipe from "BUF" to "NAK" check that "CSSTS=0" and "PBUSY=0", and modify the bit. However, when the controller has modified the **PID** bit to "NAK", it is not necessary to check the **PBUSY** bit.

2.17.16 Clear bit of sequence toggle bit (SQCLR)

Refer to 2.17.7.

2.17.17 Set bit of sequence toggle bit (SQSET)

Refer to 2.17.8.

2.17.18 Monitor bit of sequence toggle bit (SQMON)

Refer to 2.17.9.

2.17.19 Pipe busy bit (PBUSY)

Refer to 2.17.10.

2.17.20 Response PID bit (PID)

Refer to 2.17.11.

Downloaded from Elcodis.com electronic components distributor

2.18 Transaction counter

- ♦ Pipe1 Transaction counter enabled register [PIPE1TRE] <Address: 90H>
- ♦ Pipe2 Transaction counter enabled register [PIPE2TRE] <Address: 94H>
- ♦ Pipe3 Transaction counter enabled register [PIPE3TRE] <Address: 98H>
- ♦ Pipe4 Transaction counter enabled register [PIPE4TRE] <Address: 9CH>
- ♦ Pipe5 Transaction counter enabled register [PIPE5TRE] <Address: A0H>

15	14	13	12	11	10	9	8	7	6	5	4	3	2	1	0
						TRENB	TRCLR								
?	?	?	?	?	?	0	0	?	?	?	?	?	?	?	?
?	?	?	?	?	?	-	-	?	?	?	?	?	?	?	?

Bit	Name	Function	Software	Hardware	Remarks
15-10	Unassigned. Fix to "0".				
9	TRENB Transaction counter enabled	Specifies whether the transaction counter is invalid/valid. 0: Transaction counter function invalid 1: Transaction counter function valid	R/W	R	
8	TRCLR Transaction counter clear	Transaction counter can be cleared to "0" by writing "1" to this bit. 0: Invalid 1: Count counter clear	R(0)/W(1)	R	
7-0	Unassigned. Fix to "0"."				

Remarks
* Not modify each bit of the register except when "CSSTS=0" and "PID=NAK". To modify each bit after modifying the PID bit of the pipe from "BUF" to "NAK", check that "CSSTS=0" and "PBUSY=0", and then modify it. However, when the controller modifies **PID** bit to "NAK", it is not necessary to check the **PBUSY** bit.

2.18.1 Transaction counter enabled bit (TRENB)

For the reception pipe, after the total number of packets is written to the **TRNCNT** bit using the software, the controller executes the following control on receiving the same number of packets as the setup value of the **TRNCNT** bit:
(1) When the continuous transmission/reception mode is used (write "CNTMD=1"), toggles on CPU side even if the FIFO buffer is not full when reception is completed.
(2) If writing "**SHTNAK=1"**, modifies the pipe **PID** bit to "NAK".
(3) If writing "DENDE=1" and "PKTMD=0", asserts the DEND signal while reading the last data.
(4) If writing "**BFRE=1"**, asserts the **BRDY** interrupt.

Regarding the transmission pipe, write "0" to this bit. When the transaction count function is not used, write "0" to this bit. When the transaction count function is used, set the **TRNCNT** bit before writing "1" to this bit. Also write "1" to this bit before receiving the initial packet that is the transaction target.

2.18.2 Transaction counter clear bit (TRCLR)

If the software writes "1" to this bit, the controller clears the current count value of the transaction counter corresponding to the pipe and sets "0" in this bit.

Downloaded from Elcodis.com electronic components distributor

♦ Pipe1 transaction counter register [PIPE1TRN] <Address: 92H>
♦ Pipe2 transaction counter register [PIPE2TRN] <Address: 96H>
♦ Pipe3 transaction counter register [PIPE3TRN <Address: 9AH>
♦ Pipe4 transaction counter register [PIPE4TRN] <Address: 9EH>
♦ Pipe5 transaction counter register [PIPE5TRN] <Address: A2H>

15	14	13	12	11	10	9	8	7	6	5	4	3	2	1	0
TRNCNT															
0 -	0 -	0 -	0 -	0 -	0 -	0 -	0 -	0 -	0 -	0 -	0 -	0 -	0 -	0 -	0 -

Bit	Name	Function	Software	Hardware	Remarks
15-0	TRNCNT Transaction counter	Transaction counter If Write: Specifies the total number of reception packets (number of transactions) to be received by the selected PIPE. If Read: If "TRENB=0": Displays the written transaction counter If "TRENB=1": Displays the transaction counter during the count	R/W	R/W	

Remarks

2.18.3 Transaction counter bit (TRNCNT)

For the reception pipe, after the total number of packets is written to this bit using the software, if "1" is written to the **TRENB** bit, the controller executes the control mentioned in 2.18.1. If "TRENB=0", the controller shows the number of transaction written by the software to this bit. If "TRENB=1", the controller shows the number of transaction in the count in this bit.

The controller increases the **TRNCNT** bit by one, when the following conditions are fulfilled in the status at the time of reception:

(a) "TRENB=1"
(b) (TRCNT written value ≠ current number of transaction +1) while receiving the packet
(c) The payload of the received packet matches the written value of the **MXPS** bit

When the controller fulfills one of the following conditions ((1) - (3)), the **TRNCNT** bit is cleared to "0".

(1) When all the following conditions are fulfilled:
(a) "TRENB=1"
(b) While receiving the packet (**TRCNT** setup value = current value +1)
(c) The payload of the received packet matches with the setup value of **MXPS** bit

(2) When both of the following conditions are fulfilled:
(a) "TRENB=1"
(b) A short packet is received

(3) When both of the following conditions are fulfilled:
(a) "TRENB=1"
(b) When the software writes "1" to the **TRCLR** bit

For the transmission pipe, write "0" to this bit. When the transaction count function is not used, write "0" to this bit. This bit can be modified when "CSSTS=0", "PID=NAK" and "TRENB=0". To modify this bit after modifying the pipe **PID** bit from "BUF" to "NAK" check that "CSSTS=0" and "PBUSY=0", and modify the bit. However, when the controller has modified the **PID** bit to "NAK", it is not necessary to check the PBUSY bit. When modifying the bit value, write "TRCLR=1" before writing "TRENB=1".

Downloaded from Elcodis.com electronic components distributor

2.19 Device Address Configuration Register

♦ Device Address0 configuration register [DEVADD0] <Address: D0H>
♦ Device Address1 configuration register [DEVADD1] <Address: D2H>
♦ Device Address2 configuration register [DEVADD2] <Address: D4H>
♦ Device Address3 configuration register [DEVADD3] <Address: D6H>
♦ Device Address4 configuration register [DEVADD4] <Address: D8H>
♦ Device Address5 configuration register [DEVADD5] <Address: DAH>
♦ Device Address6 configuration register [DEVADD6] <Address: DCH>
♦ Device Address7 configuration register [DEVADD7] <Address: DEH>
♦ Device Address8 configuration register [DEVADD8] <Address: E0H>
♦ Device Address9 configuration register [DEVADD9] <Address: E2H>
♦ Device AddressA configuration register [DEVADDA] <Address: E4H>

15	14	13	12	11	10	9	8	7	6	5	4	3	2	1	0
	UPPHUB				HUBPORT			USBSPD							RTPORT
? ?	0 -	0 -	0 -	0 -	0 -	0 -	0 -	0 -	0 -	? ?	? ?	? ?	? ?	? ?	0 -

Bit	Name	Function	Software	Hardware	Remarks
15	Unassigned. Fix to "0".				
14-11	UPPHUB Communication target connected HUB register	Writes the USB address of the HUB to which the communication target Peripheral device is connected. 0000: Directly connected to the port of the controller. 0001-1010: USB address of HUB 1011-1111: Reserved	R/W	R	H (Write all "0" when P)
10-8	HUBPORT Communication target connected HUB port	Writes the port number of the HUB to which the communication target Peripheral device is connected. 000: Directly connected to the controller port. 001-111: Port number of HUB	R/W	R	H (Write all "0" when P)"
7-6	USBSPD Transfer speed of communication target device	Writes the USB transfer speed of the Peripheral device of the communication target. 00: DEVADDx register not used 01: Low-Speed 10: Full-Speed 11: Hi-Speed	R/W	R	H (Write all "0" when P)"
7-1	Unassigned. Fix to "0".				
0	RTPORT Root hub port number of the communication target tree	Writes the port number (root hub port number) of the controller to which the communication target tool is connected. 0: Port0 1: Port1	R/W	R	H (Write all "0" when P)"

Remarks

*1. When the Host Controller function is selected, write to each bit of the register before starting communication related to each pipe.

*2. Only modify the bits of this register if there are no valid pipes using the settings of the bit to be changed.. A valid pipe is the one that fulfills the following conditions:
(a) When the DEVSEL bit settings specify this register
(b) When "BUF" is written to the **PID** bit of the pipe, or when the pipe is DCP and is written to "SUREQ=1"

*3. When the Peripheral Controller function is selected, write "0" to each bit of this register.

Downloaded from Elcodis.com electronic components distributor

2.19.1 Communication target connected HUB register bit (UPPHUB)

When the Host Controller function is selected, the controller generates a packet by referring the set value of this bit while executing a Split transaction.

2.19.2 Communication target connected HUB port bit (HUBPORT)

When the Host Controller function is selected, the controller generates a packet by referring the set value of this bit while executing a Split transaction.

2.19.3 Transfer speed of communication device bit (USBSPD)

When the Host Controller function is selected, the controller generates a packet by referring the set value of this bit.

2.19.4 Root hub port number of communication target tree bit (RTPORT)

When the Host Controller function is selected, the controller generates a packet by referring the set value of this bit.

Downloaded from Elcodis.com electronic components distributor

3 Operating Instructions

3.1 System Controls and Oscillation Controls

This chapter provides instructions concerning register operations necessary to initialize the R8A66597 controller and descriptions of the registers necessary to control power consumption.

3.1.1 RESET

Table 3.1 shows the list of the various resets related to this controller. Please refer to “Chapter 2. Registers” for a description of the register initialization status after each reset operation.

Table 3.1 RESET List

Name	Operation
H/W Reset	”L” level input from RST_N pin
USB Bus Reset	When Peripheral Controller function is selected, controller detects reset automatically from D+/D- line status

3.1.2 Bus Interface Setting

Table 3.2 shows the parameters for the controller bus interface that must be set before enabling (“XCKE = 0”) the oscillation buffer operation. Make sure these are set immediately after the H/W reset. Table 3.3 shows the parameters to be set after the oscillation buffer operation is enabled (“XCKE = 1” is set and controller is in “SCKE = 1” status).

Table 3.2 Bus Interface Settings (set before clock supply starts)

Register Name	Bit Name	Setting Description
PINCFG	LDRV	Specify drive current controls
PINCFG	INTA	Set INT_N pin polarity

Table 3.3 Bus Interface Settings (set after clock supply starts)

Register Name	Bit Name	Setting Description
SYSCFG1	PCSDIS	Specify include/exclude CS_N assert in recovery conditions from low power sleep state
SYSCFG1	LPSME	Specify enable/disable for low power sleep state
DMAxCFG	DREQA	Set DREQx_N pin polarity
DMAxCFG	DACKA	Set DACKx_N pin polarity
DMAxCFG	DENDA	Set DENDx_N pin polarity
DMAxCFG	OBUS	Set OBUS mode
SOFCFG	BRDYM	Set PIPEBRDY interrupt status clear timing
SOFCFG	INTL	Set INT_N pin output sense

x = 0 or 1

3.1.3 Clock Supply Control

The clock supply to the controller USB block is started by selecting the XIN pin input clock in the SYSCFG register XTAL bit and enabling the oscillation buffer in the XCKE bit by software.
Confirm by software that the SCKE bit is set to “1”, then proceed with the next process.

Downloaded from Elcodis.com electronic components distributor

3.1.4 USB Block Operation Enable

After clock supply has started to the USB block (“SCKE = 1”), set the **SYSCFG** register **USBE** bit to “1" with software to enable USB block operations.

3.1.5 Controller Function Selection Bit Setting

After enabling the USB block operations, set the controller function selection bit (**SYSCFG** register **DCFM** bit). Use software to select either the Host Controller function or the Peripheral Controller function.

Table 3.4 shows the function selections for each USB port on the controller.

Table 3.4 USB Port Function Selections

When Host Controller function is selected (“DCFM = 1”)			
No.	PORT0	PORT1	Scheduling for each port
(1)	Hi-Speed	Hi-Speed	Transfer scheduling is shared between PORT0 and PORT1 and the output is driven to both ports.
(2)	Full or Low	Full or Low	
(3)	Hi-Speed	Full or Low	Transfer scheduling is operated separately for PORT0/PORT1 and is not dependent on the transfer speed of each port.
(4)	Full or Low	Hi-Speed	
When Peripheral Controller function is selected (“DCFM = 0”)			
	PORT0	PORT1	Notes
(5)	Hi or Full	unused	PORT1 is invalid. Low-Speed is not supported.

3.1.6 Hi-Speed Operation Enable Bit Setting and USB Transmission Speed Determination

3.1.6.1 When Host Controller function is selected

When the Host Controller function is selected, set the Hi-Speed operation enable bit (PORT0: **SYSCFG** register **HSE** bit, PORT1: **SYSCFG1** register **HSE** bit) to “1” only after attachment of Peripheral device is detected and the D+ line of the attached device is pulled up (i.e. not in Low-Speed mode). If the attached device is Low-Speed, or if Hi-Speed operation is not enabled, set the Hi-Speed operation enable bit of the corresponding PORT to “0”.
In addition, if the attached device is Low-Speed, the **SOFCFG** register **TRNENSEL** bit must be set to “1”. See Chapter 3.6.1 for more details.

When a USB reset is issued (“USBRST = 1”) to a PORT which is enabled for Hi-Speed operation, the controller will execute the Reset Handshake Protocol and automatically determine the USB transmission speed. The result of the PORT0 Reset Handshake is displayed in the **DVSTCTR1** register **RHST** bit and the **PORT1** result in **DVSTCTR**1 register **RHST** bit.

3.1.6.2 When Peripheral Controller Function is selected

When the Peripheral Controller function is selected and Hi-Speed operation is enabled, set the Hi-Speed operation enable bit (**SYSCFG** register **HSE** bit) to “1” after setting the controller function selection bit.

If operating the controller only at Full-Speed, set the **SYSCFG** register **HSE** bit to“0”.

When Hi-Speed operation is enabled, the controller executes the reset handshake protocol and automatically determines the USB transmission speed. The result of the reset handshake is shown in the **DVSTCTR0** register **RHST** bit.

Downloaded from Elcodis.com electronic components distributor

3.1.7 DCFM Bit Setup Values and USB Transmission Speed Control

Table 3.5 shows the **DCFM** bit setup values and the corresponding USB transmission speeds.

Table 3.5 Controller Function Selection Table

Settings			Function and Transmission speed			
DCFM	PORT0 HSE	PORT1 HSE	Controller Function	PORT0 Speed	PORT1 Speed	Remarks
0	0	0	Peripheral	Full	PORT1 invalid	PORT0 operates at Full-Speed
0	1	0		Hi or Full	PORT1 invalid	The PORT0 operates at Hi-Speed when Reset Handshake Protocol (RHSP) is successful, at Full-Speed when RSHP is not successful.
1	0	0	Host	Full or Low	Full or Low	PORT0 and PORT1 operate at Full-Speed when D+ is pulled up, Low-Speed when D- is pulled up. When D- is pulled up, make sure to set “HSE=0” in the corresponding port.
1	1	0		Hi or Full	Full or Low	PORT0: The port operates as a Hi-Speed Host Controller when RHSP is successful; Full-Speed when RHSP is not successful. PORT1: The port operates at Full-Speed when D+ is pulled up, Low-Speed when D- is pulled up. When D- is pulled up, make sure to set “HSE=0” in the corresponding port.
1	0	1		Full or Low	Hi or Full	PORT0: The port operates at Full-Speed when D+ is pulled up, Low-Speed when D- is pulled up. When D- is pulled up, make sure to set “HSE=0” in the corresponding port. PORT1: The port operates Hi-Speed Host Controller when RHSP is successful. When RHSP is not successful, the port operates at Full-Speed.
1	1	1		Hi or Full	Hi or Full	PORT0 or PORT1 operates as Hi-Speed Host Controller when RHSP is successful. When RHSP is not successful, either port operates at Full-Speed.

Downloaded from Elcodis.com electronic components distributor

3.1.8 USB Data Bus Pull-Down and Pull-Up Settings

After selecting the controller function, set the resistance for the USB data line.

This controller has built-in pull-up resistance for the D+ line and pull-down resistance for both the D+ and D- lines. Power supply for the D+ pull-up is **AVCC**.

When the Host Controller function is selected, set **SYSCFG** register **DRPD** bit to “1” if using PORT0 and set **SYSCFG1** register **DRPD** bit to “1” if using PORT1, and pull-down the D+ and D- lines for each port.
When the Peripheral Controller function is selected, after the connection to the USB Host is confirmed, set **SYSCFG** register **DPRPU** bit to “1” and pull-up D+.

In addition, the controller has built-in D+/D- line terminating resistance for Hi-Speed transmissions and output resistance for Full-Speed transmissions. The controller automatically switches the built-in resistance after connection to the USB Host or Peripheral device upon the execution or detection of a reset handshake, suspend, or resume event. When the Peripheral Controller function is selected and the **SYSCFG** register **DPRPU** bit is set to “0” in the USB Host attached status, the controller disables the USB D+ line pull-up (or D+, D- line termination). Therefore, software can be used to create the USB cable detached status when viewed from the USB Host.

Downloaded from Elcodis.com electronic components distributor

3.1.9 Power-Consumption Control

3.1.9.1 Power Consumption Control Outline

The R8A66597 controller offers two types of low-consumption power supply: Low Power Sleep State and Vcc-OFF State. Table 3.6 provides a description of each low-power consumption state.
Figure 3.1 shows a diagram of the controller status transitions.

Table 3.6 Low Power Consumption States

Controller State	Description
Low Power Sleep State	The controller transitions to the low-power sleep state when “LPSME=1” is set during initialization, and the clock is stopped in the current controller operation state (refer to 3.1.10.2). The value of each register is maintained, but the contents of the FIFO buffer are not saved.
Vcc-OFF State	The controller can be transitioned to the Vcc-OFF state by turning off only Vcc while keeping VIF on. This state reduces power consumption even further than that of the low-power sleep state. The values in the registers are not saved.

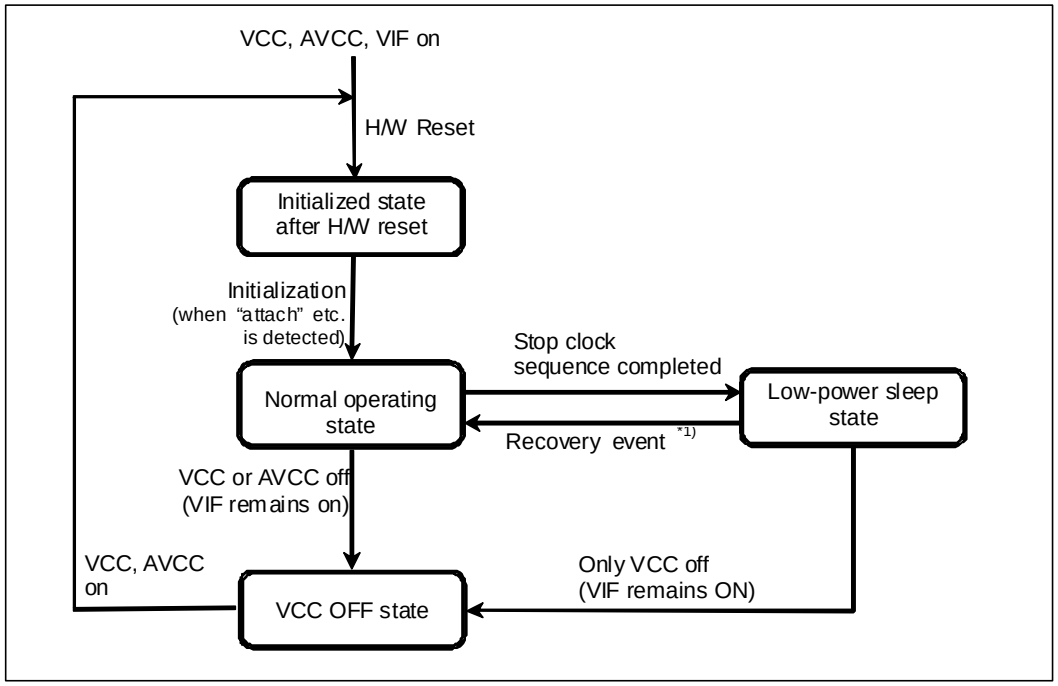

1) Recovery Event: CS_N signal is asserted by CPU dummy read when “PCSDIS=1” or
detection of RESM interrupt when “RSME=1”, or
detection of VBINT interrupt when “VBSE=1”, or
detection of BCHG interrupt when “BCHGE=1”.

Figure 3.1 Controller State Transition Diagram

Downloaded from Elcodis.com electronic components distributor

3.1.9.2 Low-Power Sleep State

When **SYSCFG1** register **LPSME** bit is set to “1” in the controller initialization, if the clock stop process is executed while the controller is in the normal operating state, the controller goes to the low-power sleep state. In this state, power consumption is reduced while maintaining the value of each register. If the controller is transitioned to this state during USB suspend, power consumption can be reduced while still maintaining the USB address, device state, and other information.
Please refer to 3.1.10.2 and Figure 3.3 for the detailed the setup sequence to transition to the low-power sleep state. To return from the low-power sleep state, refer to Table 2.7. The return sequence is detailed in 3.1.10.3 and Figure 3.4.

The controller automatically enables the oscillation buffer operation when it detects a recovery condition from the low-power sleep state. At this time, the value of the **XCKE** bit is not changed. The user must confirm “SCKE=1” by software and then set “XCKE=1”.

To enable the low-power sleep state, set the **SYSCFG1** register **LPSME** bit to “1” during controller initialization. Registers cannot be accessed during the low-power sleep state. In addition, data in the FIFO buffers will be lost during the transition, so make a send/receive data process is executed before transitioning to the low-power sleep state.

When the Host Controller function is selected and a remote wakeup signal is received in the suspend state, the internal clock must be supplied within 1ms of the signal detection and the resume signal output started. Therefore, do not stop the internal clock when the controller is in the suspend state and the remote wakeup is enabled.

3.1.9.3 VCC OFF State

The VCC OFF state allows some power to be supplied to the controller but cuts off supply to the USB block. The controller is transitioned to the VCC OFF state by keeping the VIF on while turning off the VCC and AVCC.

Unlike returning the controller from the low-power sleep state by controlling the registers with software, this state requires the VCC and AVCC to be turned on and an H/W reset executed.
The contents of each register are lost when the VCC is turned off, and the controller goes to the initialization state after recovery.

Downloaded from Elcodis.com electronic components distributor

3.1.10 State Transition Timing

3.1.10.1 Start of Internal Clock Supply (from H/W reset state to normal operating state)

Figure 3.2 shows a diagram of the clock supply start control timing for the controller. When transitioning from the H/W reset state or the clock stopped state to the normal operating state, handle the bits according to the timing below.

(1) Enable oscillation buffer "XCKE=1"
(2) Software wait until "SCKE=1". (Controller automatically enables PLLC and SCKE.)

Figure 3.2 Clock Supply Start Control Timing Diagram

3.1.10.2 Internal Clock Supply Stop (setup sequence to transition from normal operating state to low –power sleep state)

Figure 3.3 shows the control timing diagram for transitioning the controller from the normal operating state to the low-power sleep state. To enable the low-power sleep state, set "LPSME=1" in the initialization.

(1) Confirm **SOFCFG** register **EDGESTS** bit, then use software wait until "EDGESTS=0".
(2) Stop internal clock supply "SCKE=0"
(3) Software wait until internal clock stops. (requires 60ns or more wait)
(4) Stop PLL. "PLLC=0"
(5) Stop oscillation buffer operation "XCKE=0"

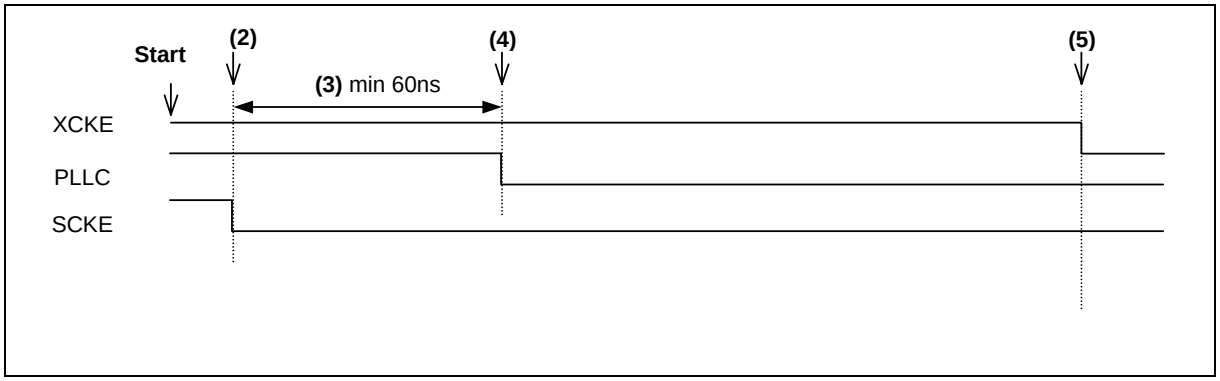

Figure 3.3 Internal Clock Supply Stop Process Timing Diagram

Downloaded from Elcodis.com electronic components distributor

3.1.10.3 Restart Internal Clock Supply (from low-power sleep state to normal operating state)

Figure 3.4 shows a diagram for transition from the low-power sleep state to the normal operating state.

(1) Interrupt is generated to trigger recovery from low-power sleep state, INT_N pin is asserted. (or, a dummy is executed by software and the controller is returned to the normal state *3)). Oscillation buffer is enabled but does not affect the **XCKE** bit.
(2) Software wait for 1ms. (Do not access the controller during this time.)
(3) Software wait until “SCKE=1”. (Controller automatically starts the oscillation buffer and enables **PLLC** and **SCKE**.)
(4) Set ”XCKE=1” with software.

***3)** Return from the low-power sleep state can be enabled by accessing the CPU if **SYSCFG1** register **PCSDIS** bit is set to “0”. If returning to the normal state in these conditions, INT_N is not asserted.

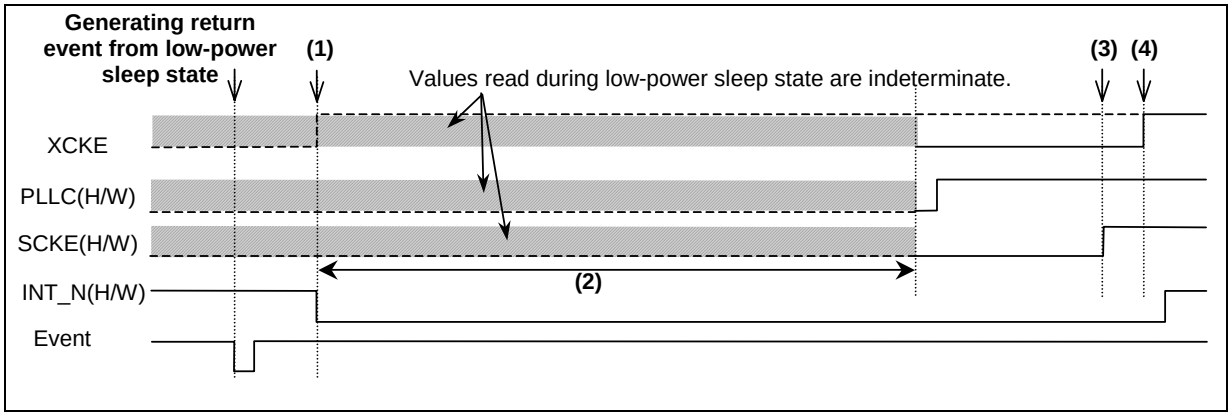

Figure 3.4 Control Timing Diagram for Returning from Low-Power Sleep State

Downloaded from Elcodis.com electronic components distributor

3.2 Interrupt Functions

3.2.1 Interrupt Function Outline

Table 3.7 shows a list of controller interrupt functions.

Table 3.7 Interrupt Function List

Bit	Interrupt Name	Interrupt Detection Conditions [Usage Instructions]	Function Setup	Related Status	Refer-ence
VBINT	Vbus interrupt	When change in VBUS input pin status is detected (Low to High or High to Low): [Detects Host connect/disconnect when Peripheral Controller function is selected.]	Host, Peripheral	VBSTS	2.11.1
RESM	Resume interrupt	When change in USB bus is detected in suspend state (J-State to K-State, J-State to SEO state): [Detects resume when Peripheral Controller function is selected.]	Peripheral	-	2.11.2
SOFR	Frame number update interrupt	When SOF packet with different frame number is sent	Host, Peripheral	-	2.11.3 3.2.8
DVST	Device state transition interrupt	When transition in device state is detected: Detects USB bus reset Detects suspend state Receives Set Address request Receives Set Configuration request	Peripheral	DVSQ	2.11.4 3.2.6
CTRT	Control transfer stage transition interrupt	When transition in control transfer stage is detected: Completes setup stage Transitions to control write transfer status stage Transitions to control read transfer status stage Completes control transfer Generates control transfer sequence error	Peripheral	CTSQ	2.11.5 3.2.7
BEMP	Buffer empty interrupt	When all data in buffer memory is sent and buffer is empty When a packet is received that is bigger than maxpacket size	Host, Peripheral	PIPEBEMP	2.11.6 2.11.23 3.2.5
NRDY	Buffer not ready interrupt	<When Host Controller Function is selected> STALL is received from peripheral side No-response from peripheral side is detected 3 times Overrun/underrun is detected during Isochronous transfer <When Peripheral Controller Function is selected> Token is received when “PID=BUF” is set and buffer memory is in a state that does not allow transfers CRC error or bit stuff error occurs during Isochronous data receive	Host, Peripheral	PIPENRDY	2.11.7 2.11.22 3.2.4
BRDY	Buffer ready interrupt	When FIFO buffer goes to Ready (read or write enabled state)	Host, Peripheral	PIPEBRDY	2.11.8 2.11.21 3.2.3
OVRCR	OVRCR generation interrupt	When OCVMON bit of related port changes state [When Host Controller Function is selected, use to connect each of OVCR0A, OVCR0B and OVCR1 pins to overcurrent status indicated pins of VBUS supply power switch, and use to detect overcurrent for each port]	Host, Peripheral	OVCMON	2.11.9 2.11.16
BCHG	Bus change interrupt	When USB bus state change is detected: [When Host Controller Function is selected, use to detach ports in suspend status and detect remote wakeup]	Host, Peripheral	-	2.11.10 2.11.17
DTCH	Detach detection	When Peripheral Device detach is detected	Host	-	2.11.11 2.11.18
ATTCH	Attach detection	When Peripheral Device attach is detected	Host	-	2.11.12 2.11.19
EOFERR	Eor error detection interrupt	When EOF error is detected on corresponding port	Host	-	2.11.13 2.11.20
SIGN	Setup transaction error interrupt	When setup transaction error (no response, ACK packet corrupted) is detected	Host	-	2.11.14
SACK	Setup transaction normal response interrupt	When normal response (ACK) is received for setup transaction	Host	-	2.11.15

Downloaded from Elcodis.com electronic components distributor

Table 3.8 shows the controller INT_N pin operation. If various interrupt factors are generated, the INT_N pin output method can be set through the **SOFCFG** register **INTL** bit. Also, the INT_N pin active state can be set by the **PINCFG** register **INTA** bit. Set the INT_N operation to meet user system specifications.

Table 3.8 INT_N Pin Operation

INT_N Pin Operation / INTL Setting	For one type of interrupt factor	For various types of interrupts factors
Edge Sense (”INTL=0”)	Asserted until interrupt factor is released (interrupt status is cleared or interrupt enable bit is set to “disabled”).	Negated for 32 clock period at 48MHz when one interrupt factor is released.
Level Sense (”INTL=1”)	Asserted until interrupt factor is released.	Asserted until all interrupt factors are released.

Active Level: low when “INTA=0”, high when “INTA=1”

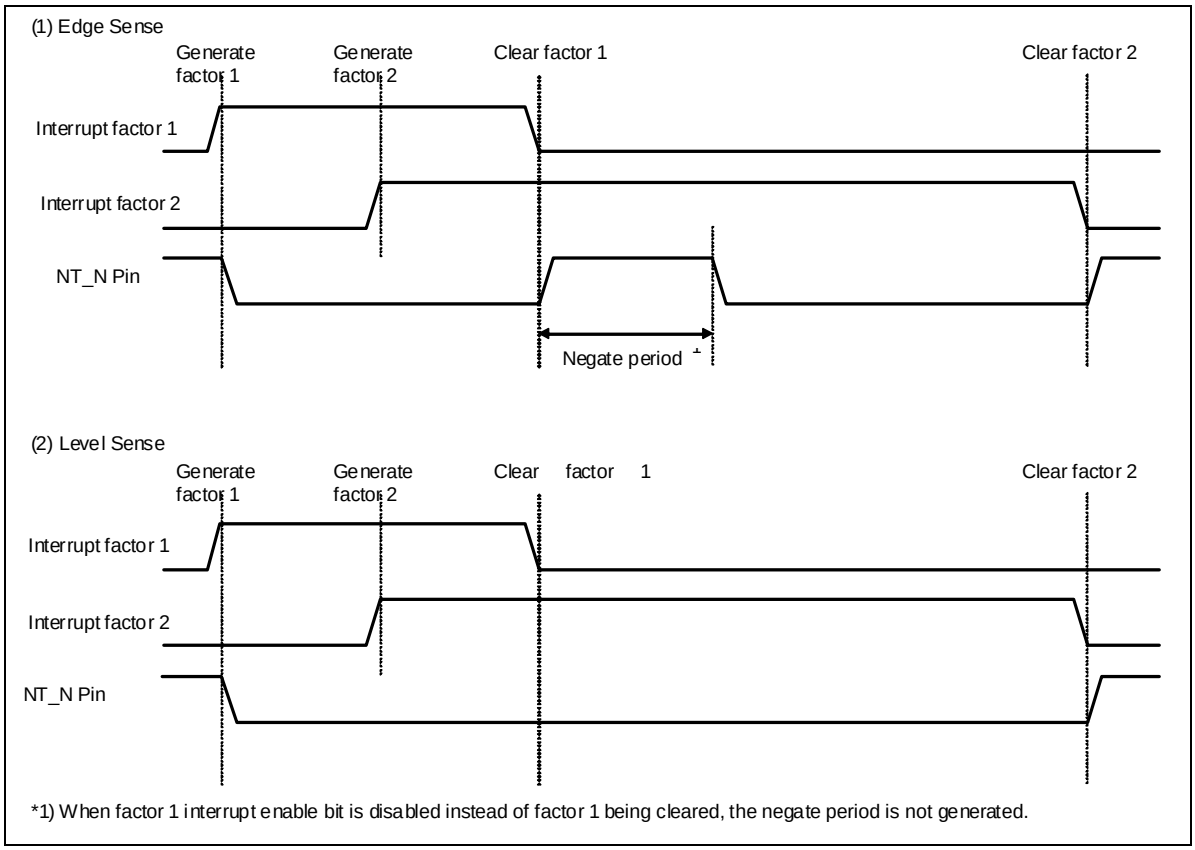

Figure 3.5 INT_N Pin Operating Diagram (example when “INTA=0” is set)

Downloaded from Elcodis.com electronic components distributor

Figure 3.6 shows the interrupt configurations for the controller..

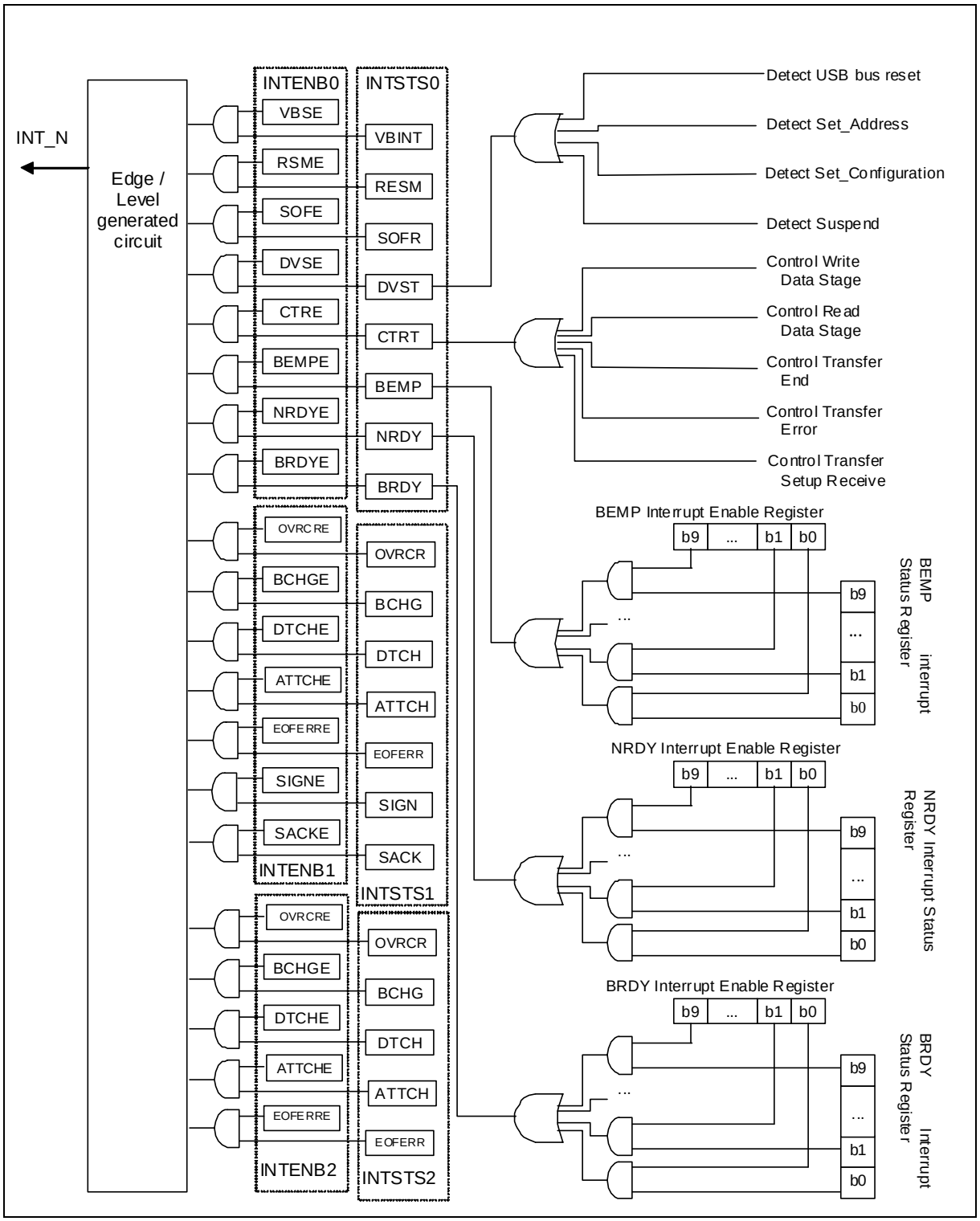

Figure 3.6 Interrupt Configuration Diagram

Downloaded from Elcodis.com electronic components distributor

3.2.2 Operations and Cautions for Clock Stopped State

VBINT, **RESM**, and **BCHG** interrupt factors will be generated even when the clock is stopped (including low-power sleep state) and, when enabled in the interrupt enable register, the interrupt from the INT_N pin will be asserted. Clear the interrupt factors after executing the clock supply start process.

When a **BCHG** interrupt is generated due to the Peripheral Device attach/detach while the clock is stopped, either the **ATCH** interrupt or the **DTCH** interrupt will be generated after the clock is re-started. Therefore, the attach/detach process may be executed due to the **ATCH** interrupt or the **DTCH** interrupt rather than the **BCHG** interrupt, depending on the determined order of interrupt factors and software process speed.

3.2.3 BRDY Interrupt

The **BRDY** interrupt is generated when either the Host or Peripheral function has been selected. Interrupt generation conditions are as shown in listed in 2.11.21. Figure 3.7 provides the **BRDY** interrupt generation timing diagram.

When a zero-length packet is received, the corresponding bit of the **BRDYSTS** register goes to “1” but the data of the corresponding packet cannot be read. Clear the buffer (“BCLR=1”) after clearing the **BRDYSTS** register.
In addition, interrupts can be generated in transfer units in PIPE1 to PIPE9 when using DMA transfers in the read direction by setting the **PIPECFG** register **BFRE** bit to “1”.

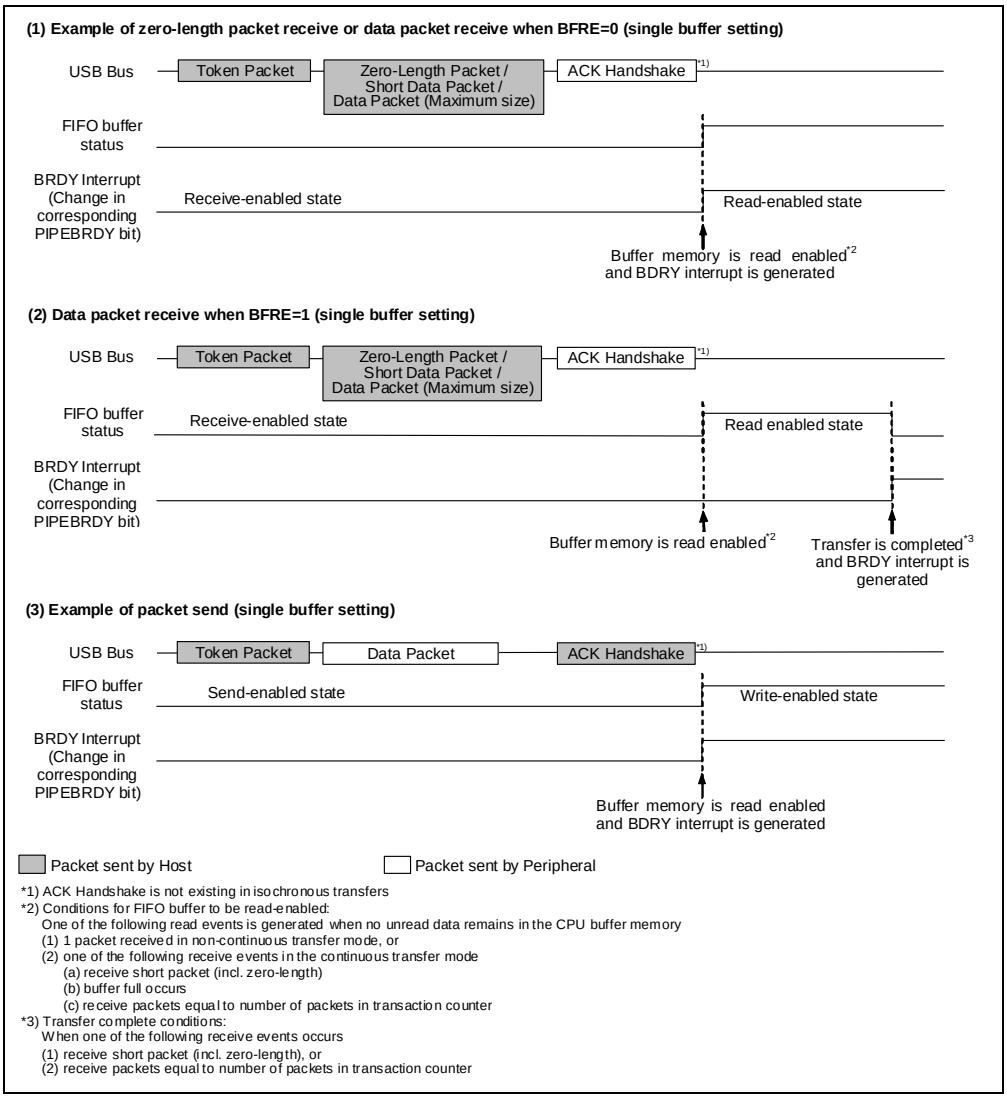

Figure 3.7 BRDY Interrupt Generation Timing Diagram

Downloaded from Elcodis.com electronic components distributor

The conditions needed for the controller to clear the **INTSTS0** register **BRDY** bit vary depending on the set value of the **SOFCFG** register **BRDYM** bit. Table 3.9 shows the conditions needed to clear the **BRDY** bit.

Table 3.9 Conditions for BRDY Clear by Controller

BRDYM	BRDY Bit Clear Conditions
0	When all bits of the **BRDYSTS** register are cleared by software, the controller clears the **INTSTS0** register **BRDY** bit.
1	When the **BSTS** bit of all pipes go to “0”, the controller clears the **INTSTS0** register **BRDY** bit.

Downloaded from Elcodis.com electronic components distributor

3.2.4 NRDY Interrupt

The **NRDY** interrupt is generated when either the Host or Peripheral function is selected. The conditions under which the **NRDY** interrupt is requested are shown in 2.11.22.

Figure 3.8 shows the diagram of the **NRDY** interrupt generation timing for the Peripheral Controller function.

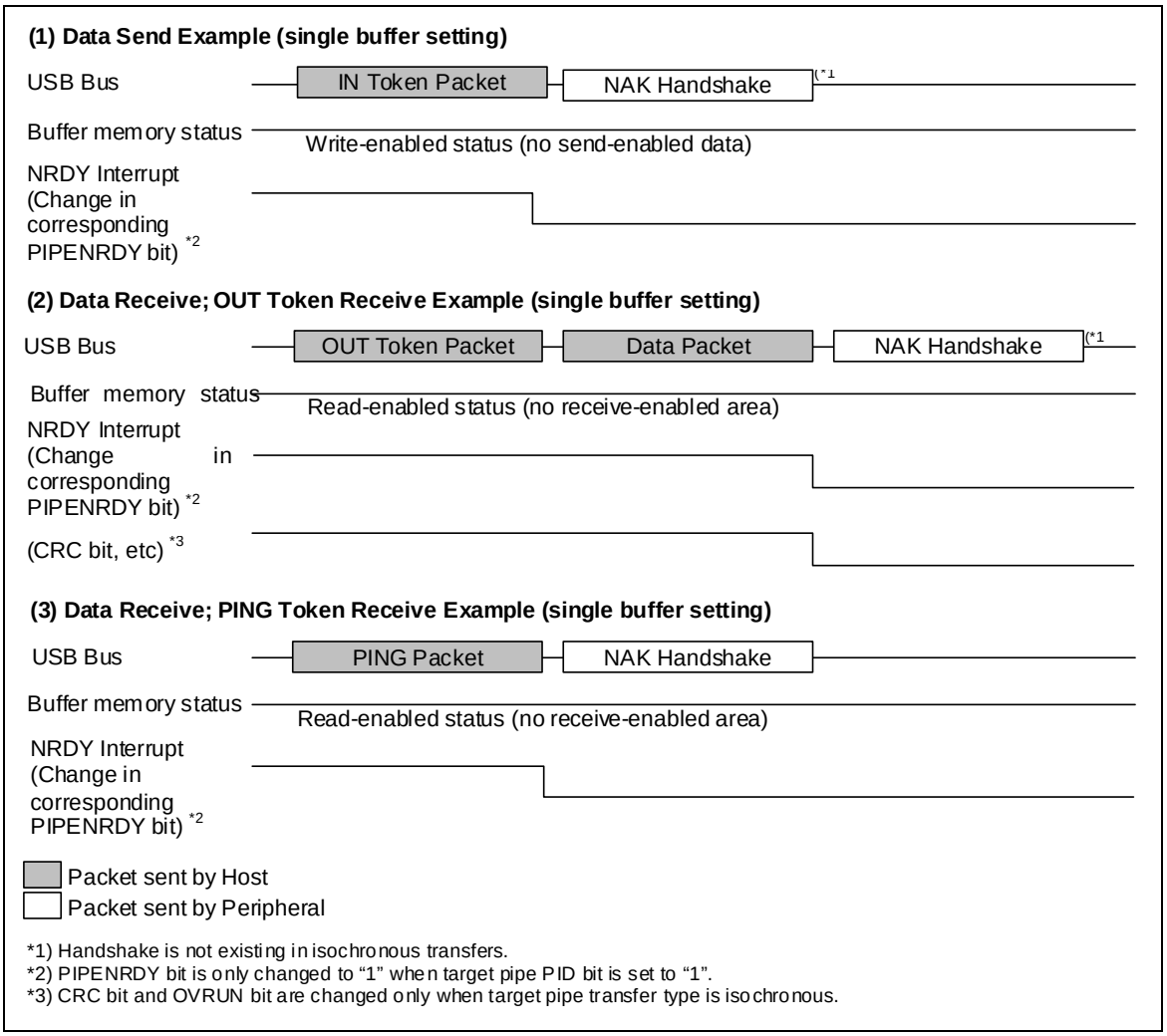

Figure 3.8 NRDY Interrupt Generation Timing for Peripheral Controller Function

Downloaded from Elcodis.com electronic components distributor

3.2.5 BEMP Interrupt

The **BEMP** interrupt is generated when either the Host or Peripheral function has been selected. The conditions under which the **BEMP** interrupt is requested are shown in 2.11.23.

Figure 3.9 provides the **BEMP** interrupt generation timing diagram.

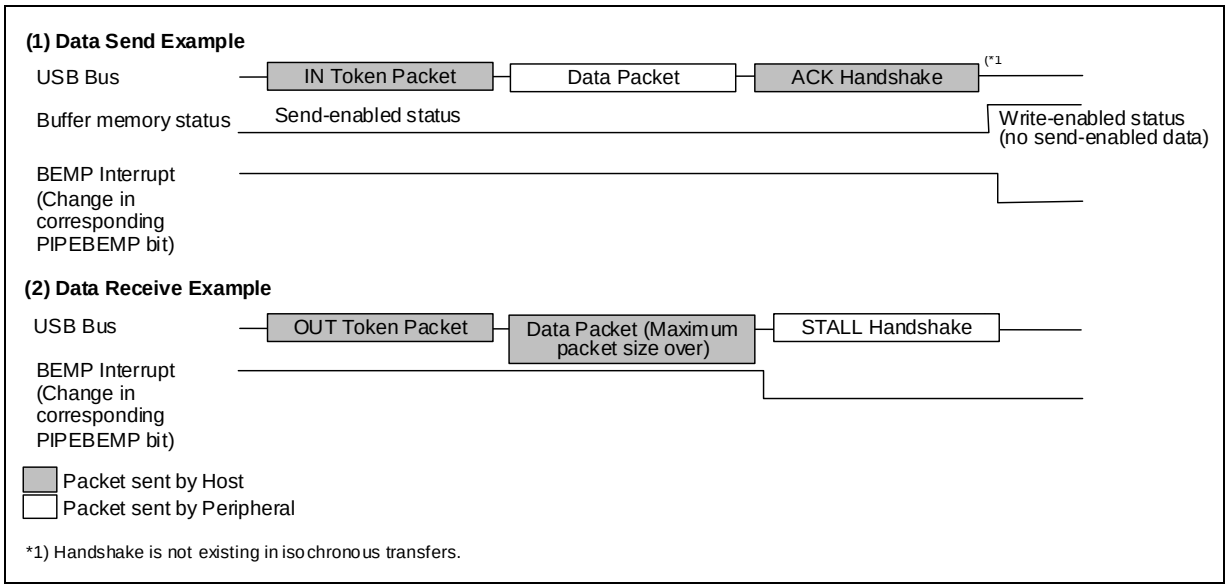

Figure 3.9 BEMP Interrupt Generation Timing Diagram for Peripheral Controller Function

Downloaded from Elcodis.com electronic components distributor

3.2.6 Device State Transition Interrupt

Figure 3.10 provides a diagram of R8A66597device state transitions. The controller manages the device state and generates the device state transition interrupt. However, return from the suspend state (resume signal detection) is detected by the resume interrupt. The device state transition interrupt can be enabled or disabled by setting the **INTENB0** register. The device state transition can be confirmed using the **INTSTS0** register **DVSQ** bit.
When transitioning to the default state, the device state transition interrupt is generated after the Reset Handshake Protocol is completed.
Device state management is only performed when the Peripheral Controller function is selected. In the same manner, the device state transition interrupt is only generated when the Peripheral Controller function is selected.

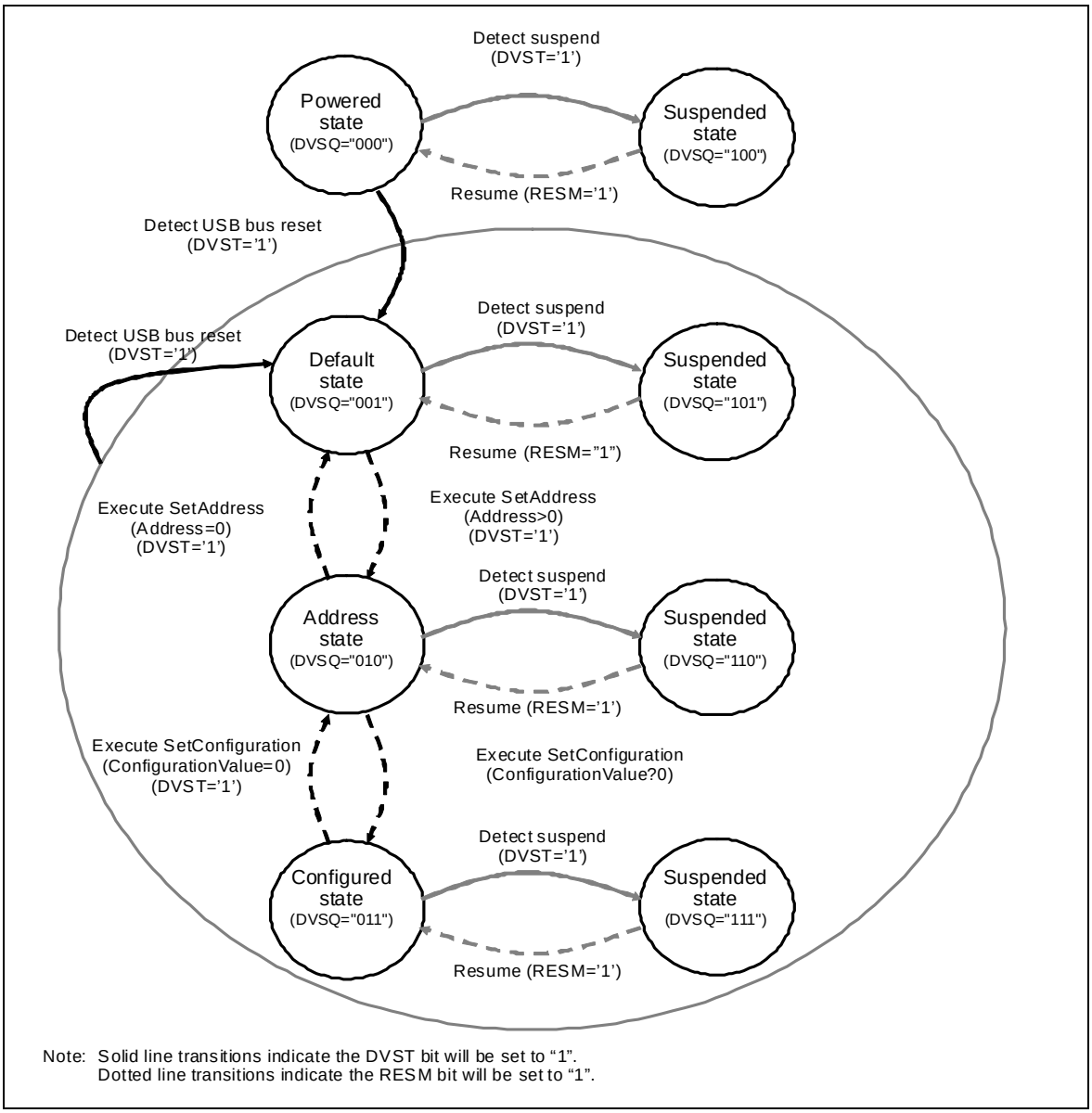

Figure 3.10 Device State Transitions

Downloaded from Elcodis.com electronic components distributor

3.2.7 Control Transfer Stage Transition Interrupt

Figure 3.11 shows a diagram of the control transfer stage transition. The controller manages the control transfer sequence and generates the control transfer stage transition interrupt. The control transfer stage transition interrupts can be enabled or disabled individually in the **INTENB0** register. The transitioned transfer stage can be confirmed in the **INTSTS0** register **CTSQ** bit.
The control transfer stage transition interrupt is only generated when the Peripheral Controller function is selected.

The control transfer sequence is as follows. When an error occurs, the **DCPCTR** register **PID** bit goes to “1X” (STALL).

(1) Control Read Transfer
- (a) OUT or PING token is received before any data transfer occurs corresponding to the data stage IN token
- (b) IN token is received in the status stage
- (c) The data packet received in the status stage is a “DATAPID=DATA0” packet

(2) Control Write Transfer
- (a) IN token is received before any ACK response is sent corresponding to a data stage OUT token
- (b) The first data packet received in the data stage is a “DATAPID=DATA0” packet
- (c) OUT or PING token is received in the status stage

(3) No-Data Control Transfer
- (a) OUT or PING token is received in the status stage

Note that in the control write transfer data stage, if the number of receive data is more than the USB request wLength value, the control transfer sequence error cannot be recognized. Also, in the control read transfer status stage, when a packet other than a zero-length packet is received, an ACK response is returned and the transfer is successfully completed.
When a **CTRT** interrupt (“SERR=1” setting) is generated due to a sequence error, “CTSQ=110” value is stored until “CTRT=0” is written by software (interrupt status clear). Therefore, because “CTSQ=110” is being maintained, the **CTRT** interrupt for the completion of the setup stage is not generated, even when a new USB request is received. Events occurring after the setup stage are saved by the controller and the setup stage end interrupt is generated after the interrupt status is cleared by software.

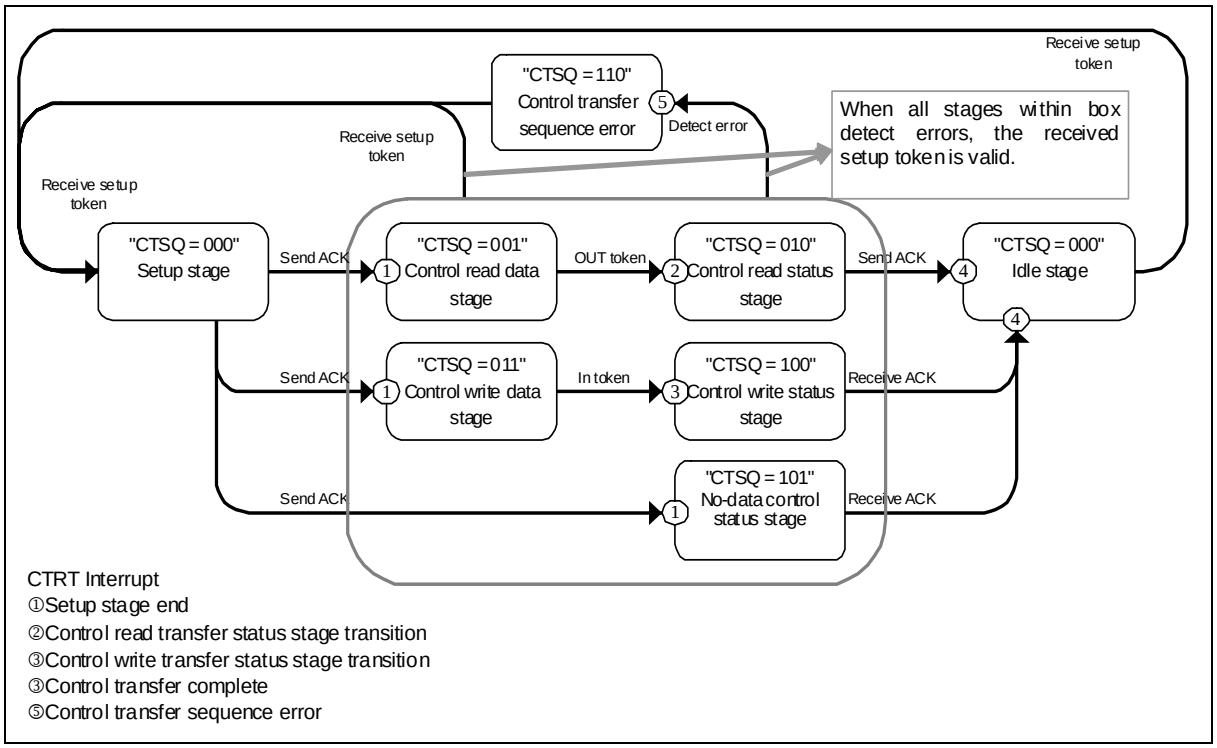

Figure 3.11 Figure 3.11 Control Transfer Stage Transition

Downloaded from Elcodis.com electronic components distributor

3.2.8 Frame Number Update Interrupt

Figure 3.12 shows an example of the R8A66597 SOFR interrupt output timing.

In the Peripheral Controller function, when the controller detects a new SOF packet in Full-Speed operation, it updates the frame number and generates an SOFR interrupt. In Hi-Speed operation, when an SOF packet with a different frame number is detected after the controller goes to the µSOF lock state, the controller updates the **FRNM** bit and generates the **SOFR** interrupt. The SOF interpolation function also runs in Hi-Speed operation after going to the µSOF locked state. The µSOF locked state means that two µSOF packets with different frame numbers are received without errors.

The µSOF lock monitor start and stop conditions are as follows.

(1) µSOF lock monitor start conditions
"USBE=1" and internal clock is supplied

(2) µSOF lock monitor stop conditions
"USBE=0", USB bus reset is received, or suspend is detected

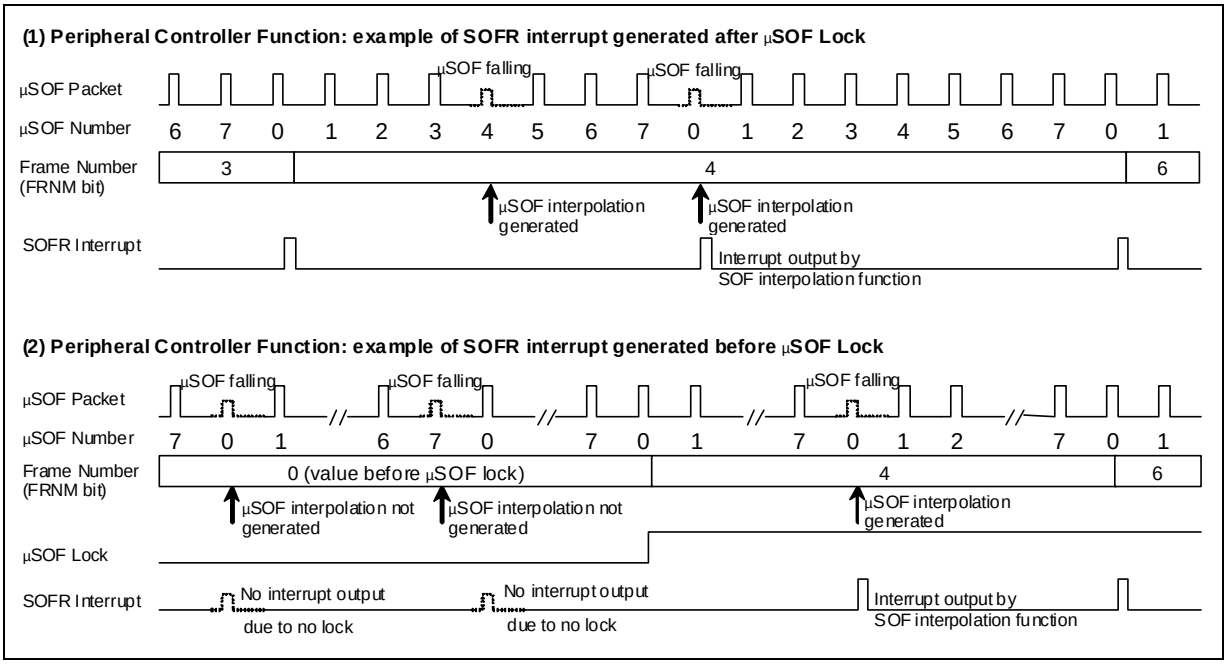

Figure 3.12 SOFR Interrupt Output Timing Example

Downloaded from Elcodis.com electronic components distributor

3.3 Pipe Control

Table 3.10 provides a list of pipe settings for the controller. In USB data transfers, data transmission is executed in logic pipes called endpoints. The R8A66597 controller comes with nine pipes for data transfer. Each pipe can be set to meet the requirements of the user system.

Table 3.10 Pipe Settings

Register Name	Bit Name	Setting Description	Comments
PIPESEL		Specifies the pipe number for setting the PIPEBU, PIPEMAXP, PIPEPERI registers.	Refer to 2.16.1 more details.
DCPCFG PIPECFG	TYPE	Specifies the transfer type	Refer to 2.16.2 for more details.
	BFRE	Selects BRDY interrupt mode	PIPE1-5: can be set Refer to 2.16.3, 3.4.3.4, and 3.4.3.5 for more details.
	DBLB	Selects single or double buffer	PIPE1-5: can be set Refer to 2.16.4 and 3.4.1.4 for more details.
	CNTMD	Selects continuous transfer or non-continuous transfer	PIPE1-2: can be set (in bulk transfer setting only) PIPE3-5: can be set For continuous send/receive, set the buffer size in multiples of the payload. Refer to 2.16.5 and 3.4.1.5 for more details.
	DIR	Selects transfer direction (read or write)	Set to IN or OUT Refer to 2.16.7 and 3.4.2.1 for more details.
	EPNUM	Endpoint number	Refer to 2.16.8 for more details.
	SHTNAK	Disables pipe when transfer is completed.	DCP: can be set PIPE 1-2: can be set (in bulk transfer setting only) PIPE 3-5: can be set Refer to 2.16.6 for more details.
PIPEBUF	BUFSIZE	Buffer memory size	DCP: cannot be set (fixed at 256 bytes) PIPE1-5 can be set (set in 64 byte units up to a max of 2K bytes) PIPE6-9: cannot be set (fixed at 64 bytes) Refer to 2.16.9 and 3.4.1 for more details.
	BUFNMB	Buffer memory number	DCP: cannot be set (fixed at areas 0-3) PIPE1-5: can be set (between areas 8 and 135 (0x87) PIPE6-9: cannot be set (fixed at areas 4-7) Refer to 0 and 3.4.1 for more details.
DCPMAXP PIPEMAXP	DEVSEL	Selects device	Refer to 2.16.11 for more details.
	MXPS	Maximum packet size	Refer to 2.16.12 and 0 for more details.
PIPEPERI	IFIS	Buffer flash	PIPE1-2: can be set (in isochronous transfer setting only) PIPE3-9: cannot be set Refer to 2.16.13 and 3.9.5 for more details.
	IITV	Interval counter	PIPE1-2: can be set (in isochronous transfer setting only) PIPE3-9: can be set (only when Host Controller function is selected) Refer to 2.16.14 and 3.9.3 for more details.
DCPCTR PIPExCTR	BSTS	Buffer Status	Refer to 2.17.1 and 3.4.1.1 for more details.
	INBUFM	IN buffer monitor	Refer to 2.17.2 and 3.4.1.1 for more details.
	SUREQ	SETUP request	Only DCP can be set Can only be controlled when Host function is selected
	SUREQCLR	SUREQ clear	Only DCP can be set Can only be controlled when Host function is selected
	CSCLR	CSSTS clear	Can only be controlled when Host function is selected
	CSSTS	Split Transaction Status Confirm	Can only be controlled when Host function is selected

Downloaded from Elcodis.com electronic components distributor

Register Name	Bit Name	Setting Description	Comments
	ATREPM	Auto response mode	PIPE1-5: can be set Can only be controlled when Peripheral function is selected
	ACLRM	Auto buffer clear	Can be enabled and disabled when buffer memory is read-enabled Refer to 2.17.6 and 2.17.15 for more details.
	SQCLR	Sequence toggle bit clear	Clear data toggle bit Refer to 2.17.7 and 3.3.4 for more details..
	SQSET	Sequence toggle bit set	Set data toggle bit Refer to 2.17.8 and 3.3.4 for more details.
	SQMON	Sequence toggle bit confirm	Confirm data toggle bit Refer to 2.17.9 and 3.3.4 for more details.
	PBUSY	Confirm pipe busy	Refer to 2.17.10 for more details.
	PID	Response PID	Refer to 2.17.11 and 3.3.2 for more details..
PIPExTRE	TRENB	Transaction count enable	PIPE1-5: can be set Refer to 2.18.2 for more details.
	TRCLR	Current transaction counter clear	PIPE1-5: can be set Refer to2.18.3 for more details.
PIPExTRN	TRNCNT	Transaction counter	PIPE1-5: can be set Refer to 2.18.1 for more details.
DEVADDx	UPPHUB	Transmission targeted device connected HUB register connected	Can be set only when Host function is selected Refer to 2.19.1 for more details.
	HUBPORT	Transmission targeted device connected HUB port	Can be set only when Host function is selected Refer to 2.19.2 for more details.
	USBSPD	Transfer speed of the transmission targeted device	Can be set only when Host function is selected Refer to 2.19.3 for more details.
	RTPORT	Root hub port number for the transmission targeted tree	Can be set only when Host function is selected Refer to 2.19.4 for more details.

Downloaded from Elcodis.com electronic components distributor

3.3.1 Maximum Packet Size Setting

Maximum packet size for each pipe is set in the **MXPS** bit of the **DCPMAXP** and **PIPEMAXP** registers. DCP and pipes 1-5 can be set with any maximum packet size defined in the USB specifications. Pipes 6-9 are limited to maximum packet size of 64 bytes. Set the maximum packet size before starting transfers (set “PID=BUF”).

DCP: set to “64” for Hi-Speed operation
DCP: set to “8”, “16”, “32”, or “64” for Full-Speed operation
PIPE 1-5: set to “512” for Hi-Speed bulk transfer
PIPE 1-5: set to “8”, “16”, “32”, or “64” for Full-Speed bulk transfer
PIPE 1-2: set a value from “1” to “1024” for Hi-Speed isochronous transfer
PIPE: 1-2: set a value from “1” to “1023” for Full-Speed isochronous transfer. For more details, see section 3.9.
PIPE 6-9: Set a value from “1” to “64”.

High-bandwidth transfers are not yet supported in interrupt and isochronous transfers.

Downloaded from Elcodis.com electronic components distributor

3.3.2 Response PID

Set the response PID for each pipe with the **PID** bit of the **DCPCTR** and **PIPExCTR** registers.

(1) Response PID setting for Host Controller function

The response PID specifies the transaction execution.

(a) NAK setting: Pipe is in disabled status; transaction cannot be executed.

(b) BUF setting: transaction is executed according to the buffer memory status.
For OUT direction, when there is send data in the buffer memory, an OUT token is issued.
For IN direction, if there is empty space in the buffer memory and it is receive enabled, an IN token is issued.

(c) STALL setting: Pipe is in the disabled status; transaction cannot be executed.

Use the **SUREQ** bit to perform the DCP setup transaction.

(2) Response PID setting for Peripheral Controller function

The response PID specifies the response to a transaction from the Host.

(a) NAK setting: Always sends a NAK response when a transaction is issued.

(b) BUF setting: Responds to the transaction in accordance with the buffer memory status.

(c) STALL setting: Always sends a STALL response when a transaction is issued.

Regardless of the value set in the PID bit, an ACK is always sent as a response to a setup transaction and the USB request is stored in corresponding registers.

Based on the results of the transaction, the controller may trigger the PID bit to be written.
The controller will trigger a write event to the PID bit in the following cases.

(1) H/W setting of Response PID when Host Controller function is selected

(a) NAK setting:
In the following conditions, the **PID** bit is set to NAK and token issuance is automatically stopped.

(i) In transfer types other than isochronous, when a receive error, such as No Response, bit stuffing error or CRC error, occurs 3 times consecutively in response to a transferred token

(ii) In an isochronous transfer, when a receive error, such as bit stuffing error or CRC error, occurs 3 times consecutively in response to a transferred token

(iii) When **DCPCFG** register **SHTNAK** bit is set to “1” and a short packet is received in the data stage of a control read transfer

(iv) When a short packet is received during a bulk transfer and **PIPECFG** register **SHTNAK** bit is set to “1”

(v) When a transaction counter is completed during a bulk transfer and **PIPECFG** register **SHTNAK** bit is set to “1”

(b) BUF setting: the BUF cannot be written by the controller

(c) STALL setting:
In the following conditions, the **PID** bit is set to **STALL** and token issuance is automatically stopped.

(i) STALL is received in response to a sent token

(ii) Received packet exceeds maximum packet size

(2) H/W setting of Response PID when Peripheral Controller function is selected

(a) NAK Setting:

(i) When SETUP token is received normally (only DCP)

(ii) In bulk transfers when **PIPECFG** register **SHTNAK** bit is set to “1” and short packet is received

(iii) In bulk transfers when **SHTNAK** bit is set to “1” and the transfaction counter is completed.

(b) BUF setting: the BUF cannot be written by the controller

(c) STALL setting:

(i) When a maximum packet size over error is detected for a received data packet

(ii) When a control transfer sequence error is detected

Downloaded from Elcodis.com electronic components distributor

3.3.3 PIPE Information Modification Process

The following pipe control register bits can be re-written only when USB transmission is disabled (“PID=NAK”). Figure 3.13 shows the process for switching the pipe control register from the USB transmission enabled status.

Registers that are prohibited setting when the USB transmission is enabled (“PID=BUF”):

(1) All bits of **DCPCFG** and **DCPMAXP** registers
(2) **DCPCTR** register **SQCLR**, **SQSET**, and **CSCLR** bits
(3) All bits of **PIPECFG**, **PIPEBUF**, **PIPEMAXP** and **PIPEPERI** registers
(4) **PIPExCTR** register **ATREPM**, **ACLRM**, **SQCLR**, and **SQSET** bits
(5) All bits of **PIPExTRE** and **PIPExTRN** registers
(6) All bits of **DEVADDx** register

In addition to the settings described for the **CSCLR** bit and all bits of the **DEVADDx** register, setup methods described in Chapter 2 for each bit must also be complied with.

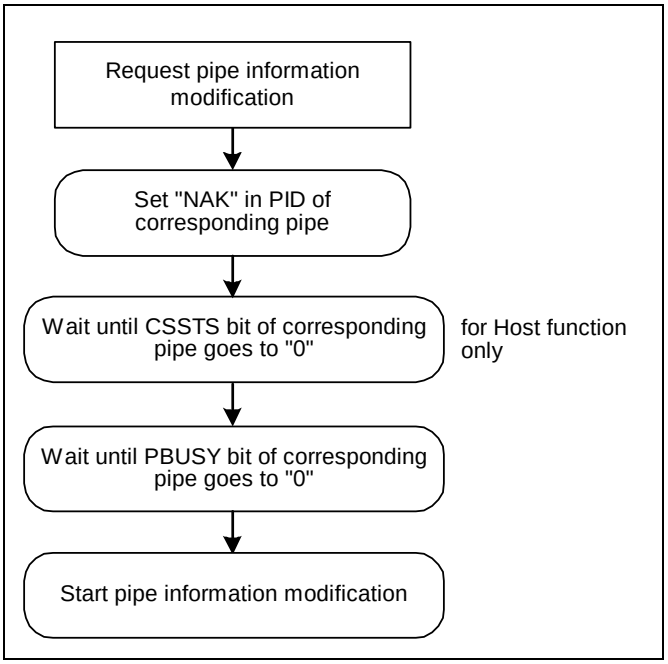

Figure 3.13 PIPE Information Modification Process from USB Transmission Enabled (PID=BUF”) Status

In addition, the following pipe control register bits can only be re-written with pipe information that is not set in the **CURPIPE** bit of CPU/DMA0/DMA1-FIFO ports.

Register cannot be set while corresponding pipe number is set in FIFO port **CURPIPE** bits:

(1) All bits of **DCPCFG** and **DCPMAXP** registers
(2) All bits of **PIPECFG**, **PIPEBUF**, **PIPEMAXP** and **PIPEPERI** registers

When modifying information of a pipe, specify other pipe number in the **CURPIPE** bit. Also, after setting the DCP pipe information, execute the clear process for the buffer using the **BCLR** bit.

3.3.4 Data PID Sequence Bit

When a normal data transfer occurs in the control transfer data stage, bulk transfer or interrupt transfer, the controller automatically toggles the data PID sequence bit. The next data PID sequence bit for data transfer can be confirmed in the **SQMON** bit in the **DCPCTR** or **PIPExCTR** registers. The sequence bit is switched in the ACK handshake receive timing when data is sent or in the ACK handshake send timing when data is received. The data PID sequence bit can also be modified for the **SQCLR** and **SQSET** bits of the **DCPCTR** and **PIPExCTR** registers.

Downloaded from Elcodis.com electronic components distributor

For control transfers when the Peripheral Controller function is selected, the controller automatically sets the sequence bit for stage transitions.
In control transfers when the Peripheral Controller function is selected, the controller automatically sets the sequence bit when the stage transitions. The bit goes to DATA0 when the setup stage completes, and responds with DATA1 in the status stage. Therefore, the bit does not need to be set with software. In control transfers when the Host Controller function is selected, the sequence bit must be set with software when the stage transitions.
Note that regardless of whether the Host or Peripheral function is selected, the data PID sequence bit must be set with software when a ClearFeature request is sent or received.
Finally, the sequence bit cannot be controlled through the **SQSET** bit for the isochronous transfer setup pipe.

Downloaded from Elcodis.com electronic components distributor

3.4 Buffer Memory

This section describes operations concerning the controller's built-in buffer memory. Unless specified, the operations apply to both Host and Peripheral function selections.

3.4.1 Buffer Memory Allocation

Figure 3.14 provides an example buffer memory map of the controller. The buffer memory is an area shared by the CPU that controls the user system and this controller. The various buffer memory conditions determine access authority for the user system (CPU side) and/or this controller (SIE side).

The buffer memory is set into independent areas for each pipe. The memory area is set in 64-byte blocks by the block start addresses and the number of blocks (set in **PIPEBUF** register **BUFNMB** bit and **BUFSIZE** bit). When selecting the continuous transfer mode with the **PIPExCFG** register **CNTMD** bit, make sure the **BUFSIZE** bit is set in integral multiples of the maximum packet size. Also, when selecting the double buffer in the **PIPExCFG** register **DBLB** bit, 2 areas of the memory specified in the **PIPEBUF** register **BUFSIZ**E bit will be allocated for the corresponding pipe.

Three FIFO ports are used for access (data read/write) to the buffer memory. The pipe number of the pipe assigned to each FIFO port is specified in the **C/DxFIFOSEL** register **CURPIPE** bit.

The buffer status (enable/disable access for data read/write to buffer memory from CPU) of each pipe can be confirmed in the **BSTS** and **INBUFM** bits of the **DCPCTR** and the **PIPExCTR** registers. Also, FIFO port access authorization can be confirmed in the **C/DxFIFOCTR** register **FRDY** bit.

Downloaded from Elcodis.com electronic components distributor

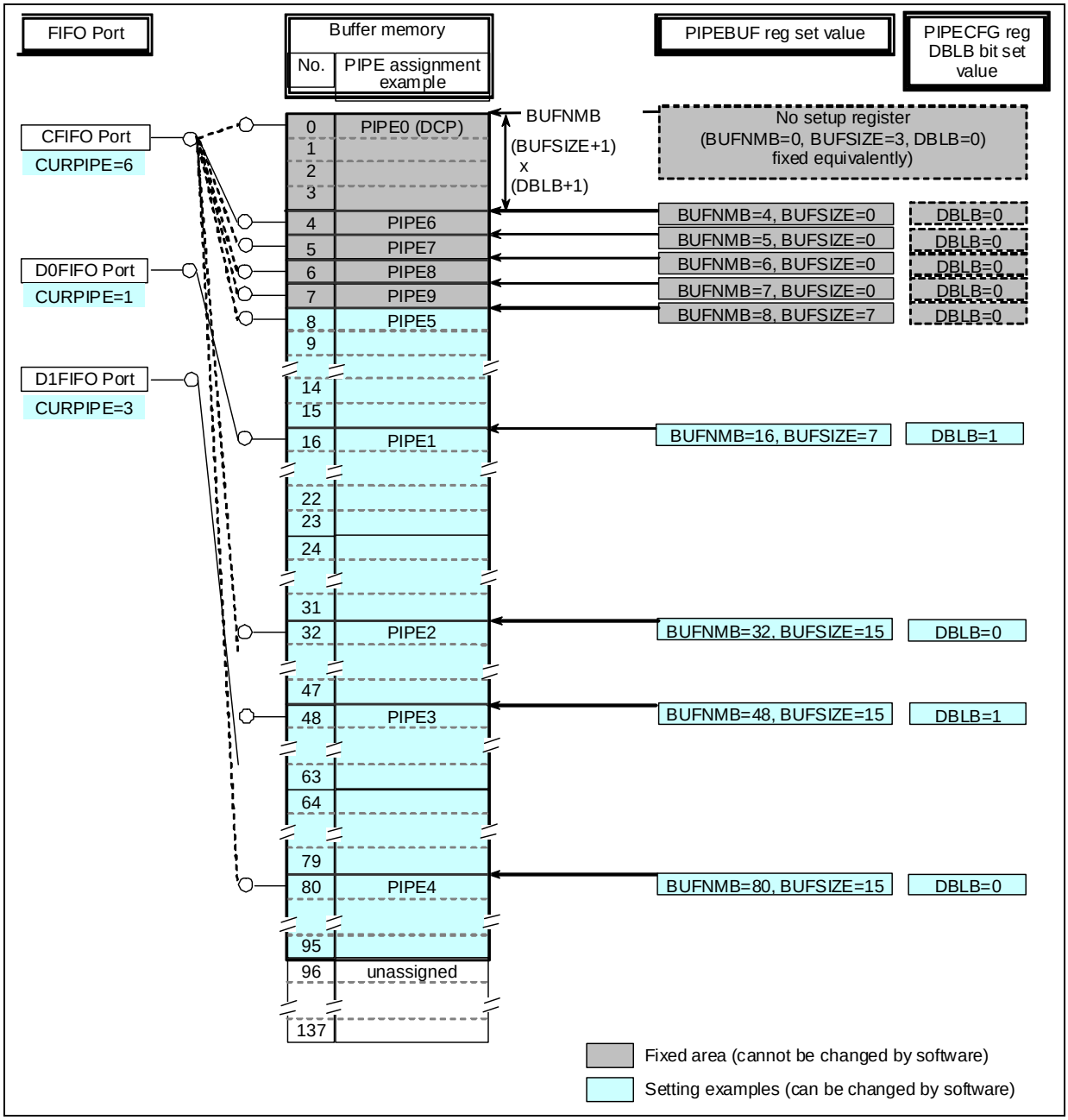

Figure 3.14 Buffer Memory Map Example

Downloaded from Elcodis.com electronic components distributor

3.4.1.1 Buffer Status

Table 3.11 shows the buffer statuses for the controller. The buffer memory status can be confirmed with the **BSTS** and **INBUFM** bits. The direction of buffer memory access can be specified in the **PIPExCFG** register **DIR** bit or the **CFIFOSEL** register **ISEL** bit (in the DCP setting).
The **INBUFM** bit is only valid in the send direction of pipes 1 to 5.

When the send-side transfer pipe is set to double buffer, the **BSTS** bit is used to determine the status of the CPU-side buffer and the **INBUFM** bit is used to determine the status of the SIE-side buffer. If the write event to the FIFO port using the CPU (DMCA) is slow and the buffer empty space cannot be determined by the **BEMP** interrupt, send completion can be confirmed with the **INBUFM** bit.

Table 3.11 Buffer Status Confirmation with BSTS Bit

ISEL or DIR	BSTS	Buffer Memory Status
0 (receive direction)	0	No receive data or now receiving. FIFO port is read-disabled.
0 (receive direction)	1	Receive data is in FIFO buffer or zero-length packet is received. FIFO port is read-enabled. However, when zero-length packet is received the FIFO port is read-disabled and the buffer must be cleared.
1 (send direction)	0	Send is not completed. FIFO port is write-disabled.
1 (send direction)	1	Send is completed. FIFO port is write-enabled.

Table 3.12 Figure 3.12 Buffer Status Confirmation with INBUFM Bit

DIR	INBUFM	Buffer Memory Status
0 (receive direction)	Invalid	Invalid
1 (send direction)	0	Send data transfer is complete. No send data in FIFO buffer
1 (send direction)	1	Send data is written from FIFO port. Send data is in FIFO buffer.

3.4.1.2 Buffer Clear

Table 3.13shows the buffer memory clear conditions for the controller. The following 4 bits can clear the buffer memory.

Table 3.13 Buffer Clear Bits

Bit Name	BCLR	SCLR	DCLRM	ACLRM
Register	CFIFOCTR register DxFIFOCTR register	CFIFOSIE register	DxFIFOSEL register	PIPExCTR register
Function	Clears the CPU-side buffer memory of the pipe assigned to the CFIFO port or DxFIFO port	Clears the SIE-side buffer memory of the pipe assigned to the CFIFO port.	automatically clears the buffer memory after data is read from the specified pipe. Convenient function when using DMAC to read data. Refer to 3.4.3.4	Clears the SIE-side buffer memory of the corresponding pipe by writing “1” and “0” consecutively to the ACLRM bit.
Setup Method	Clear the buffer memory by setting “BCLR=1”. (Automatically returns to “BCLR=0”)	Clear the buffer memory by setting “SCLR=1”. (Automatically returns to “SCLR=0”)	Set “DCLRM=1” to enable mode. Set “DCLRM=0” to disable mode.	Set “ACLRM=1” to enable mode. Set “ACLRM=0” to disable mode.

Downloaded from Elcodis.com electronic components distributor

3.4.1.3 Buffer Area

Table 3.14shows the buffer memory map for the controller. The buffer memory consists of a fixed area in which pipes are pre-assigned and a user area in which the user can set blocks as needed. The DCP buffer is a fixed area used only for control read transfers and control write transfers. Pipes 6-9 are pre-assigned to areas. When not using one of these pipes, the user can assign one of pipes 1-5 to the unused pipe area and utilize as a user area. Be careful to set the pipe areas so that they do not overlap. In addition, set the buffer size so that it is larger or equal than the maximum packet size.

Table 3.14 Buffer Memory Map

Buffer Memory Number	Buffer Size	Assignable PIPE
0 – 3	256 bytes (64 bytes x 4 blocks)	DCP-only fixed area
4	64 bytes	PIPE 6 fixed area
5	64 bytes	PIPE 7 fixed area
6	64 bytes	PIPE 8 fixed area
7	64 bytes	PIPE 9 fixed area
8 – 135 (0x87)	8192 bytes (64 bytes x 128 blocks)	PIPE 1-5

3.4.1.4 Buffer Memory Specifications (Single/Double Setting)

Pipes 1-5 can be specified as single or double buffers with the **PIPExCFG** register **DBLB** bit. The double buffer is a function that assigns doulbe areas in the specified memory with the **PIPEBUF** register **BUFSIZE** bit for one pipe. Figure 3.14 is a double buffer setting example of PIPE1 and PIPE3 as seen in the buffer memory map example.

Downloaded from Elcodis.com electronic components distributor

3.4.1.5 Buffer Memory Operations (continuous transfer setting)

The **CNTMD** bit in either the **DCPCFG** or **PIPExCFG** register can be used to select the continuous or non-continuous transfer mode. Selection can be made for pipes 0-5.

The continuous transfer mode sends/receives multiple transactions continuously. When the continuous transfer mode is selected, data can be transferred up to the buffer size assigned to each pipe, without interrupts to the CPU.

In the continuous send mode, the write data is sent divided into maximum packet sizes. If the send data that is less than the buffer size (short packets or packets in integral multiples of the maximum packet size that are smaller than the buffer size), “BVAL=1” must be set after the send data is written.

In the continuous receive mode, the **BRDY** interrupt is not generated until packets are received up to the buffer size, the transaction count is completed, or a short packet is received.

Figure 3.15shows a status transition example of the controller’s **CNTMD** bit and buffer memory.

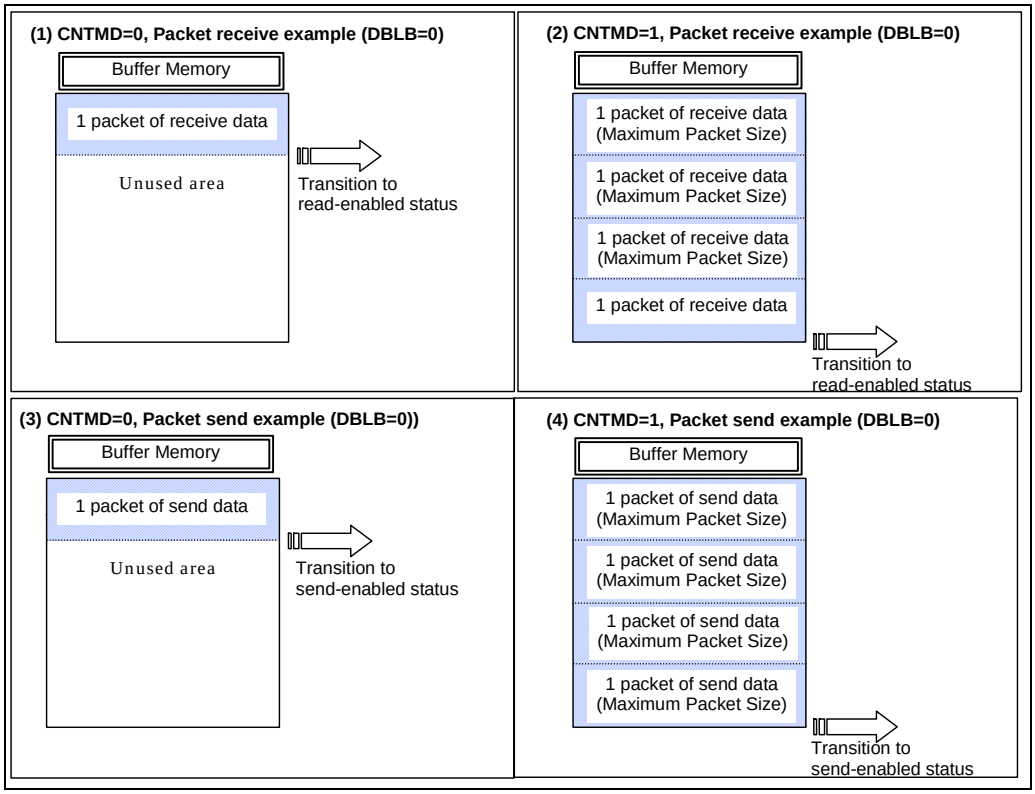

Figure 3.15 CNTMD Bit and Buffer Memory Status Transition Example

Downloaded from Elcodis.com electronic components distributor

3.4.2 FIFO Port Function

This section describes the FIFO port functions. Table 3.15 shows definitions of the FIFO port function settings for the controller. When data write access is enabled and data is written up to buffer full state (in non-continuous transfer: maximum packet size), the port automatically goes to the USB bus send enabled status. To enable data send of less than buffer full (in non-continuous transfer: less than number of maximum packet size), the port must be set to write complete in the **C/DxFIFOCTR** register **BVAL** bit (DMA transfer: **DEND** signal). To send a zero-length packet, the port must be set to write complete in the BVAL bit in addition to clearing the buffer with the **BCLR** bit of the same register. When a read access is executed, if all the data is read, the port automatically goes to the new packet receive enable status. However, when a zero-length packet is received (DTLN=0), the data cannot be read and the buffer must be cleared in the **BCLR** bit of the same register. The receive data length is confirmed in the **C/DxFIFOCTR** register **DTLN** bit.

Table 3.15 FIFO Port Function Settings

Register Bit	Bit Name	Function	Refernece	Notes
C/DxFIFOSEL	RCNT	Selects DTLN read mode		
	REW	Buffer memory window (re-read, re-write)	2.8.4 3.4.2.2	
	DCLRM	Automatically clears buffer memory after specified pipe received date is read	2.8.11 3.4.1.2 3.4.3.4	DxFIFO only
	DREQE	DREQ signal assert	3.4.3	DxFIFO only
	MBW	FIFO port access bit width	2.8.5 3.4.2.1	
	BIGEND	FIFO port endian control	2.8.6	
	ISEL	FIFO port access direction	2.8.7 3.4.2.1	DCP only
	CURPIPE	Selects Current PIPE	2.8.8	
C/DxFIFOCTR	BVAL	Buffer memory write end	2.8.16	
	BCLR	Clears CPU-side buffer memory	2.8.17 3.4.1.2	
	FRDY	Monitors FIFO port ready	2.8.18	
	DTLN	Confirms received data length	2.8.19	
External pin	DEND	Buffer memory write end	0 3.4.3.3	DMA transfer only

3.4.2.1 FIFO Port Selection

Table 3.16 shows the list of pipes that can be selected in each FIFO port. The pipes to be accessed are selected with the **C/DxFIFOSEL** register **CURPIPE** bit. After selecting the pipes, confirm that the **CURPIPE** value written was read correctly (if the previous pipe number is read out, this indicates the controller is still processing the pipe change), then confirm that “FRDY=1” and access the FIFO port.
Also, select the bus width for the FIFO port access with the **MBW** bit.
The buffer memory access direction is determined by the **ISEL** bit for DCP, and the **PIPExCF**G register **DIR** bit for all other pipes.

Table 3.16 FIFO Port Access by PIPE

PIPE	Access Method	Usable Ports
DCP	CPU access	CFIFO port register
PIPE 1-7	CPU access	CFIFO port register DxFIFO port register
	DMA access	DxFIFO port register

3.4.2.2 REW Bit

The **REW** bit the **C/DxFIFOSEL** register in allows the user to temporarily stop the current pipe access, execute access of another pipe, then continue the current pipe access process again.

Downloaded from Elcodis.com electronic components distributor

3.4.2.3 Transaction Counter (read direction)

The transaction counter enables the controller to recognize transfer completion after the specified number of transactions has completed in the data packet receive direction. The transaction counter is a function that operates in correspondence to pipes set in the receive direction. This function can be used for read events from any FIFO port. The transaction counter includes the **TRNCNT** register, which specifies the number of transactions, and the current counter that counts the number of internal transactions. When the current counter reaches the specified number of transactions, the buffer memory goes to the read-enabled status, even if it is not full. When the Host Controller function is selected, not only is the buffer memory read-enabled, but tokens cannot be issued by the controller to the corresponding pipe.

The **TRCLR** bit can be used to initialize the current counter in the transaction counter function so that the transaction can counted from the beginning again. Also, the information read from the **TRNCNT** register can be switched by setting the **TRENB** bit accordingly.

TRENB=0: the set transaction counter value is read out
TRENB=1: the current counter value counted internally is read out

Modification conditions for the CURPIPE are as follows:

(1) Do not change the **CURPIPE** setting until the transaction in the specified pipe is completed.
(2) The **CURPIPE** cannot be changed unless the current counter is cleared.

TRCLR bit usage conditions are as follows.

(1) The current counter cannot be cleared while a transaction is in process and “PID=BUF”.
(2) The current counter cannot be cleared when data remains in the buffer.

Downloaded from Elcodis.com electronic components distributor

3.4.3 DMA Transfer (DxFIFO Port)

3.4.3.1 DMA Transfer Outline

Pipes 1-9 can be used for FIFO port access with DMAC. When access becomes enabled for the pipe set by DMA, the **DREQ** signal is asserted.

The DMA transfer can be executed in the cycle steal transfer mode, which asserts the **DREQ** signal every time one data (8-bit or 16-bit) is transferred, or in the burst transfer mode, in which the **DREQ** signal is continually asserted until all data transfers in the buffer memory are completed. The timing is described in detail in “Chapter 4. Electric Characteristics.”

Select the FIFO port transfer unit (8 bits or 16 bits) with the **DxFIFOSEL** register **MBW** bit and the DMA transfer pipe with the **CURPIPE** bit. Note that the pipe (value set in **CURPIPE** bit) should not be changed during a DMA transfer.

3.4.3.2 DMA Control Signal Selection

Select the pin for DMA transfers in the **DMAxCFG** register **DFORM** bit and control the **DREQx_N** pin with the **DxFIFOSEL** register **DREQE** bit. Table 3.17provides the list of DMA control pins and Figure 3.16 shows the FIFO port access method and the DMA control pin.

Table 3.17 DMA Control Pin List

Access Method	Register				Pin					Reference
	DREQE	DFORM			DATA Bus	DREQ	DACK	RD/WR	ADDR +CS	
CPU bus 0	0	0	0	0	CPU	-	-	○	○	CPU access
CPU bus 1	1	0	0	0	CPU	○	-	○	○	DMA through CPU bus
CPU bus 2	1	0	1	0	CPU	○	○	○	*1)	DMA through CPU bus
CPU bus 3	1	0	1	1	CPU	○	○	-	*1)	DMA through CPU bus
SPLIT bus	1	1	1	0	SPLIT	○	○	-	-	SPLIT bus

***1)** When setting this access method, set the CS_N to inactive (fix to “High”) while accessing the DxFIFO port.

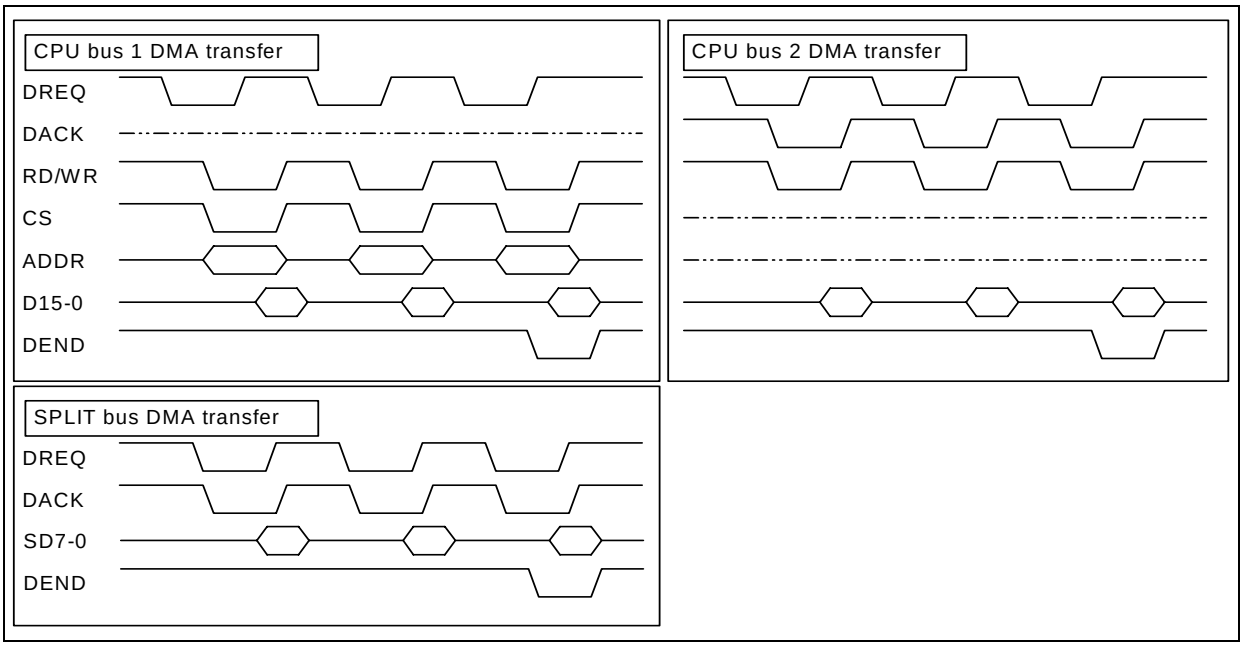

Figure 3.16 FIFO Port Access and DMA Control Pin

Downloaded from Elcodis.com electronic components distributor

3.4.3.3 DEND Pint

The controller can end a DMA transfer using the **DEND** pin. The **DEND** pin also functions as input/output according to the USB data transfer direction.

(1) Buffer memory read direction

The **DEND** pin can perform as an output pin and notify the external DMA controller of the last data transfer. The **DEND** signal assert conditions can be set in the **DMAxCFG** register **PKTM** bit. Table 3.18 provides a list of **DEND** pin asserts.

Table 3.18 DEND Pin Assert List

Event / PKTM	Transaction Count End	BRDY generated due to packet receive	Receive short packet other than zero-length	Receive Zero-Length packet when buffer is not EMPTY	Receive zero-length packet when buffer is EMPTY *2)
0	Assert	No assert	Assert	Assert	Assert
1	Assert	Assert	Assert	Assert	No assert

***1)** The **DREQ** signal is not asserted if a zero-length packet is received when the buffer is empty.

(2) Buffer memory write direction

The **DEND** pin becomes an input pin and the buffer memory goes to send-enabled (same status as when "BVAL=1") when an active edge is detected.

3.4.3.4 DxFIFO Automatic Clear Mode (DxFIFO port read direction)

When a data read event of the controller buffer memory is completed with setting **DxFIFOSEL** register **DCLRM** bit to "1", the buffer memory of the corresponding pipe is automatically cleared.

Table 3.19 shows the correspondence between the packet received and the buffer memory clear process by software in each setting.

As indicated in Table 3.19, the buffer clear conditions differ according to the **BFRE** bit set value, even for statuses in which clear is normally required, using the **DCLRM** bit eliminates the need for buffer clear by software, enabling DMA transfers without the use of software.

Note that this function only has supports the buffer memory read direction setting.

Table 3.19 Correspondence of Packet Receive and Buffer Memory Clear Process by Software

Register Setting / Buffer state when packet received	DCLRM = 0		DCLRM=1	
	BFRE=0	BFRE=1	BFRE=0	BFRE=1
Buffer full	Clear unnecessary	Clear unnecessary	Clear unnecessary	Clear unnecessary
Zero-Length packet received	Clear necessary	Clear necessary	Clear unnecessary	Clear unnecessary
Normal short packet received	Clear unnecessary	Clear necessary	Clear unnecessary	Clear unnecessary
Transaction count end	Clear unnecessary	Clear necessary	Clear unnecessary	Clear unnecessary

Downloaded from Elcodis.com electronic components distributor

3.4.3.5 BRDY Interrupt Timing Selection Function

The **PIPECFG** register **BFRE** bit can be set so that the **BRDY** interrupt is not generated when a data packet of maximum packet size is received.

When using a DMA transfer, this function enables an interrupt to be generated only when the last data is received. The last data indicates either a short packet receive or the transaction count end. By setting “BFRE=1”, the **BRDY** interrupt will be generated after the received data is read. By reading the **DnFIFOCTR** register **DTLN** bit, the receive data length of last data packet received just before the **BRDY** interrupt was generated can be confirmed.

Table 3.20 shows the timing of the **BRDY** interrupt.

Table 3.20 BRDY Interrupt Generation Timing List

Registration Setting / Buffer state when packet received	BFRE = “0”	BFRE = “1”
Buffer full (normal packet received)	When packet is received	No interrupt generated
Zero-Length packet received	When packet is received	When packet is received
Normal short packet received	When packet is received	When read event of data received from buffer memory is completed
Transaction count end	When packet is received	When read event of data received from buffer memory is completed

The **BFRE** bit function is only valid in the read direction of the buffer memory. When in the write direction, fix the **BFRE** bit to “0”.

Downloaded from Elcodis.com electronic components distributor

3.4.4 FIFO Port Access Enable Timing

This section describes the FIFO port access enable timing.

3.4.4.1 FIFO Port Access Enable Timing at Pipe Switch

Figure 3.17 shows the timing diagram up to confirmation of the **FRDY** and **DRLN** bits when the pipe specified by the FIFO port is switched (modified **C/DxFIFOSEL** register **CURPIPE** bit).
When the **CURPIPE** bit is modified, first confirm that the written **CURPIPE** value was read correctly (if the previous pipe number is read out, this indicates the controller is still processing the pipe modification), then confirm that "FRDY=1" and access the FIFO port.
The same timing applies to modification of the **ISEL** bit for the CFIFO port.

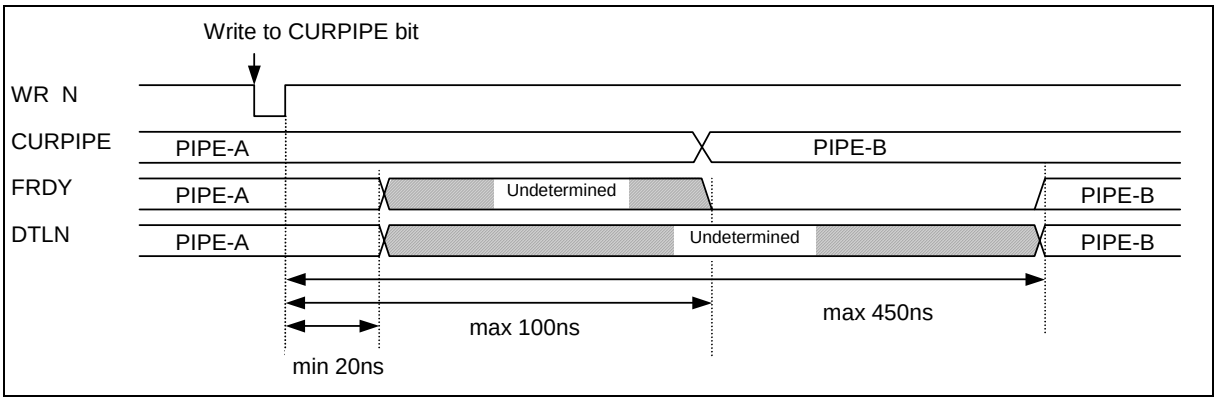

Figure 3.17 FRDY, DRLN Fix Timing after Pipe Switch

3.4.4.2 FIFO Port Access Enable Timing after Double Buffer Read/Write is Completed

Figure 3.18 shows the timing diagram up to when access is enabled for the second buffer, after the buffer read or write is completed in the double buffer mode.
In the double buffer mode, always access the FIFO port after waiting 300ns after the access just before the toggle.
The same timing is applied to sending a short packet by setting "BVAL=1" in the IN direction pipe.

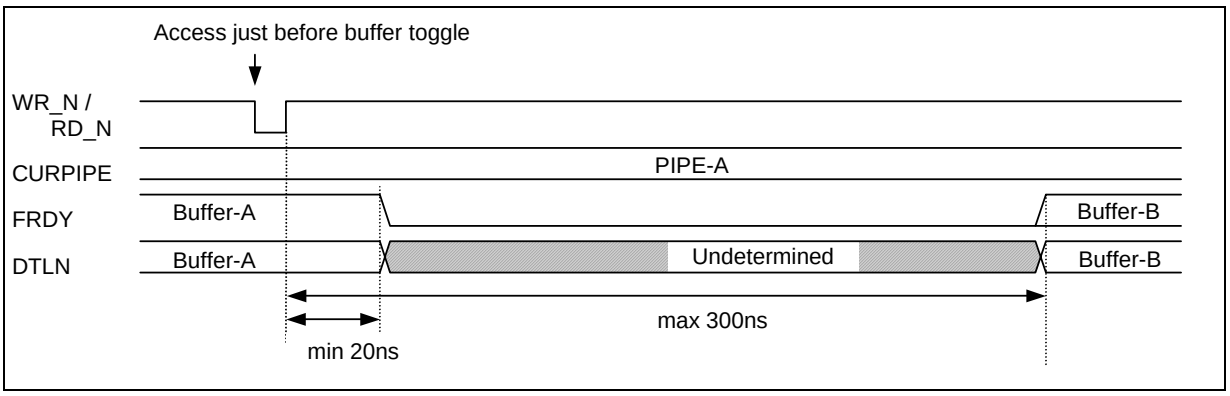

Figure 3.18 Figure 3.18 FRDY, DTLN Confirmation Timing after Double Buffer Read/Write Complete

Downloaded from Elcodis.com electronic components distributor

3.5 Data Setup Timing

This section describes the **OBUS** bit that sets the split bus timing. The same operations apply in both Host and Peripheral Function selections.
The timing of the SD0-7 and **DEND** pins can be modified through the **DMAxCFG** register **OBUS** bit as described in Table 3.21. The **OBUS** bit function is only valid for DMA transfers using a split bus. When using the CPU bus for DMA transfers, the **OBUS** bit setting is ignored.

Table 3.21 Operation Differences According to OBUS Bit Setup Value

Direction	OBUS Bit Setting	Operation
Read	0	SD0-7/DEND signals are output normally, regardless of the control signal *1. If the control signal is negated, the next data is output. Therefore, the DMAC data setup timing is secured and Hi-Speed DMA transfer is enabled.
	1	SD0-7/DEND signals are output after the control signal is asserted. SD0-7/DEND signals go to Hi-z if the control signal is negated.
Write	0	SD0-7/DEND signals are output normally, regardless of the DACKx_N signal. The DMAC can output the next data before the DACKx_N signal is asserted. Therefore, the controller data setup timing is secured and Hi-Speed DMA transfer is enabled.
	1	SD0-7/DEND signals are input-enabled only when the DACKx_N signal is asserted. SD0-7/DEND signals are ignored if the DACKx_N signal is negated.

***1)** The control signal indicates DACKx_N when DMAxCFG register DFORM [9 – 7] is “100”.

When ”OBUS=0” is set in the read direction, SD0-7/DEND signal are always output. Note that, therefore, when sharing the bus with another device, ”OBUS=1” shall be set.

When ”OBUS=0” is set in the write direction, SD0-7/DEND signals are always input-enabled. Do not allow the signals to be used as mid-rail voltage.

Figure 3.19 shows the configuration of data setup timing by the OBUS bit.

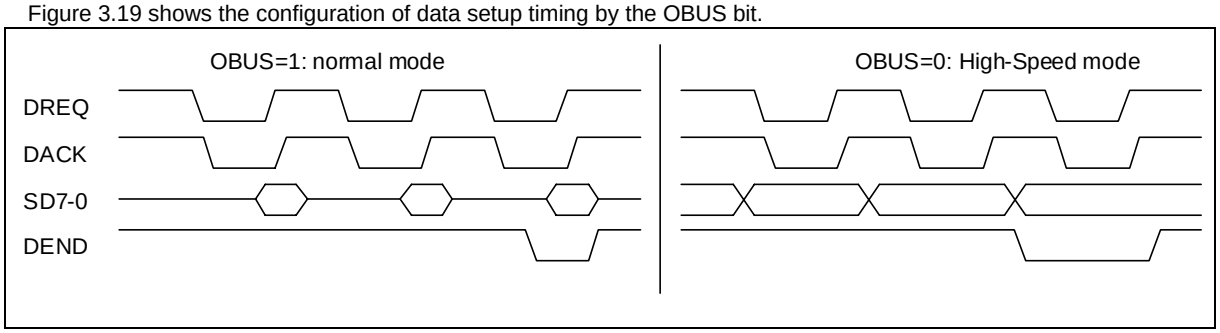

Figure 3.19 Data Setup Timing Configuration

Downloaded from Elcodis.com electronic components distributor

3.6 Control Transfer (DCP)

Data transfer in the data stage of the control transfer uses the default control pipe (DCP). The DCP buffer memory is a 256-byte single buffer fixed area used for both control read and control write events. Only the CFIFO port is enabled for access to the buffer memory.

3.6.1 Control Transfer with Host Controller Function

Stage transition is managed for control transfers by software in the following manner.
When the Peripheral Device corresponding to the control transfer is in Low-Speed operation, set the **SOFCFG** register **TRNENSEL** bit to “1” for the control transfer period with the device.

3.6.1.1 Setup Stage

The following registers are used for USB request send events in the setup transaction: **USBREQ**, **USBVAL**, **USBINDX**, and **USBLENG**. By writing a setup packet data to the registers and setting “1” in the **DCPCTR** register **SUREQ** bit “1”, the set data will be sent as the setup transaction. The **SUREQ** bit is written to “0” by H/W after the transaction is completed. Do not use the above-listed USB request registers while “SUREQ=1”.

After Peripheral Device attachment is detected, issue the initial setup transaction for the device by setting the **DCPMAXP** register **DEVSEL** bit to “0” and setting the **DEVADD0** register UPPHUB, **HUBPORT**, **USBSPD**, and **RTPORT** bits as described in the sequence above.

After the Peripheral device has transitioned to the Address state, issue the setup transaction in the above-described sequence after setting the assigned USB Address value to the **DEVSEL** bit and setting each bit of the **DEVADDx** register that corresponds to the USB Address. For example when “DEVSEL=0x2”, set the **DEVADD2** register; when “DEVSEL=0xA”, set the **DEVADDA** register.
After the transaction is sent, an interrupt request is issued in response from the peripheral (**INTSTS1** register **SIGN** bit and **SACK** bit). The setup transaction result can be confirmed by this interrupt request.
The setup transaction data packet is always the DATA0 data packet (USB request), regardless of the contents of the **DCPCTR** register **SQMON** bit.

3.6.1.2 Data Stage

The data stage uses the DCP buffer memory for data transfers.
To access the DCP buffer memory, set the access direction in the **CFIFOSEL** register **ISEL** bit. Also set the transfer direction in the **DCPCFG** register **DIR** bit.
The first packet in the data stage must transmit the data PID as DATA1. Execute the transaction by setting the data PID as DATA1 in the **DCPCFG** register **SQSET** bit and setting the **PID** bit to BUF. Data transfer completion is detected by the **BRDY** or **BEMP** interrupts.
In control write transfers, when the send data is in integral multiples of the maximum packet size, use software to output a zero-length packet as the last packet.
For transmissions in the data send direction in Hi-Speed operations, the user can select PING or OUT for the first token to be issued by setting the **DCPCTR** register **PINGE** bit.
PING packet control is the same as that for bulk transfers. Refer to 3.7.1 for more details.

3.6.1.3 Status Stage

The status stage transfers data in a zero-length packet in the opposite direction of the data stage. As in the data stage, the DCP buffer memory is used for data transfers. Transactions are executed in the same procedure as that of the data stage.
The status stage data packet must transmit the data PID as DATA1. Make sure data PID is set as DATA1 in the **DCPCFG** register **SQSET** bit.
Also, for zero-length packet receive events, confirm the received data length in the **CFIFOCTR** register **DTLN** bit after the **BRDY** interrupt is generated, then clear the buffer memory with the **BCLR** bit.
For transmissions in the data send direction in Hi-Speed operation, the user can select PING or OUT for the first token to be issued by setting the **DCPCTR** register **PINGE** bit.

Downloaded from Elcodis.com electronic components distributor

3.6.1.4 PING Packet Control in Data Stage and Status Stage

OUT direction PING packets are automatically sent out by the controller. When “PINGE=0” is set, the controller starts the send direction transmission with the OUT packet. If a NAK or NYET is received in response to an OUT transaction, a PING is sent. When an ACK handshake is received in response to the PING, the OUT packet is sent.

<<Start OUT Data Send>>

(1) Send OUT data packet
(2) Receive ACK handshake
(3) Send OUT data packet
...
(4) Receive NAK/NYET handshake
(5) Send PING packet
(6) Receive NAK handshake
(7) Send PING packet
...
(8) Receive ACK handshake

Usage with ”PINGE=0” setting is recommended.
Operations for “PINGE=1” setting are described in Section 3.7.1.

Downloaded from Elcodis.com electronic components distributor

3.6.2 Control Transfer with Peripheral Controller Function Selected

3.6.2.1 Setup Stage

The controller always responds with an ACK when it receives a normal setup packet. The controller operations in the setup stage are as follows.

(1) When a new setup packet is received, the controller sets the following bits.
  (a) Sets **INTSTS0** register **VALID** bit to “1”.
  (b) Sets **DCPCTR** register **PID** bit to “NAK”.
  (c) Sets **DCPCTR** register **CCPL** bit to “0”.

(2) When a data packet is received following the setup packet, the USB request parameters are stored in the following registers: **USBREQ**, **USBVAL**, **USBINDX** and **USBLENG**.

Always set “VALID=0” in the response process to a control transfer. In the “VALID=1” state, “PID=BUF” will not be set and the data stage cannot be completed.
The **VALID** bit function allows the controller to temporarily stop a request in-process when it receives a new USB request during a control transfer, and respond to the newest request.

In addition, the controller automatically judges the direction bit (bmRequestType bit 8) and the request data length (wLength) of the received USB request and determines whether it is a control read transfer, control write transfer or no-data control transfer, and then handles the stage transition. If the sequence is incorrect, a sequence error for the control transfer stage transition interrupt occurs and is notified to the software. For more information concerning the controller stage management, refer to Figure 3.11.

3.6.2.2 Data Stage

Use the DCP for data transfers in response to receiving a USB request.
Before accessing the DCP buffer memory, set the access direction in the **CFIFOSEL** register **ISEL** bit. Also set the transfer direction in the **DCPCFG** register **DIR** bit.
The first data packet in the data stage must transmit the data PID as DATA1. To execute the transaction, set the data PID as DATA1 in the **DCPCFG** register **SQSET** bit and set the **PID** bit to BUF.
Data transfer completion is detected by the **BRDY** and **BEMP** interrupts.
Use the **BRDY** interrupt for control write transfers and the **BEMP** interrupt for control read transfers.
For control write transfers in Hi-Speed operation, a NYET handshake is sent in accordance with the buffer memory status. For more details, see Chapter 3.6.1.4,

3.6.2.3 Status Stage

When the DCPCTR register PID bit status is “PID=BUF”, set the CCPL bit to “1” to complete the control transfer.
After the above settings, the controller automatically executes the status stage in accordance with the data transfer direction fixed in the setup stage. The detailed process is as follows.

(1) Control read transfers:
  The controller sends a zero-length packet and receives an ACK response from the USB Host Controller.

(2) Control write transfers and no-data control transfers:
  The controller receives a zero-length packet from the USB host and sends an ACK response.

3.6.2.4 Control Transfer Automatic Response Function

The controller automatically sends a response to a normal SET ADDRESS request. If one of the following errors occurs, a response must be sent by software.

(1) bmRequestType ≠ “0x00”
(2) wIndex ≠ “0x00”
(3) wLength ≠ “0x00”
(4) wValue > “0x7F”
(5) wValue ≠ 0 and DVSQ = "011"
(6) wValue = 0 and DVSQ = "001"

All requests other than the SET ADDRESS request must be responded to by software.

Downloaded from Elcodis.com electronic components distributor

3.7 Bulk Transfer (Pipes 1-5)

The user can select the buffer memory usage method (single/double buffer, continuous/non-continuous transfer mode) for the bulk transfer mode. The buffer memory size can be set up to a 2K-byte double buffer. The controller manages the buffer memory state and automatically responds to PING packets and NYET handshakes.

3.7.1 PING Packet Control with Host Controller Function Selected

OUT-direction PING packet are automatically sent by the controller. The controller starts the send-direction transmission with the PING packet, as shown below. When an ACK handshake is received in response to the PING, the OUT packet is sent. When a NAK or NYET is received in response to an OUT transaction, the controller returns to the PING send status.

<<Start OUT Data Send >>

(1) Sent PING packet
(2) Receive NAK handshake
(3) Send PING packet
(4) Receive ACK handshake
(5) Send OUT data packet
(6) Receive ACK handshake
(7) Send OUT data packet
...
(8) Receive NAK/NYET Handshake

Factors for returning to the PING packet send status are the following settings: H/W reset, NYET/NAK handshake receive, sequence toggle bit clear (**SQCLR**) and buffer clear (**ACLRM**).

3.7.2 NYET Handshake Control with Peripheral Controller Function Selected

Table 3.22 shows the list of responses to a token received in a bulk or control transfer. When an OUT token is received in a bulk or control transfer and there is only enough open space for one packet in the buffer memory, the controller sends a NYET response. However, when a short packet is received, the controller sends an ACK response instead of a NYET response, even under these conditions.

Table 3.22 Response List for Received Tokens

PID Bit Set Value	Buffer Memory Status *1)	Receive Token	Response	Notes
NAK/STALL	-	SETUP	ACK	-
	-	IN/OUT/PING	NAK/STALL	-
BUF	-	SETUP	ACK	-
	RCV-BRDY*1	OUT/PING	ACK	Receive data packet at OUT token receive
	RCV-BRDY*2	OUT	NYET	Receive data packet, notify immediate receiving of next packet disabled
	RCV-BRDY*2	OUT (Short)	ACK	Receive data packet, notify immediate receiving of next packet enabled
	RCV-BRDY*2	PING	ACK	Notify receive enabled
	RCV-NRDY	OUT / PING	NAK	Notify receive disabled
	TRN-BRDY	IN	DATA0 / 1	Send data packet
	TRN-NRDY	IN	NAK	

***1)** Further response details:

RCV-BRDY*1: Buffer memory has enough space for 2 packets or more when OUT/PING token is received.
RCV-BRDY*2: Buffer memory has only enough space for one packet when OUT token is received
RCV-NRDY: Buffer memory has not enough space for one packet when PING token is received.
TRN-BRDY: Buffer memory has send data when IN token is received.
TRN-NRDY: Buffer memory does not have send data when IN token is received.

Downloaded from Elcodis.com electronic components distributor

3.8 Interrupt Transfer (Pipes 6-9)

When the Peripheral Controller function is selected, the controller executes an interrupt transfer in accordance with the period managed by the Host controller. The controller ignores (no response) PING packets in interrupt transfers. In addition, the controller does not send a NYET handshake, but responds with ACK, NAK or STALL.
When the Host Controller function is selected, the token issuance timing can be set by the interval counter. Even for OUT direction transfers, the PING token in not issued but an OUT token is issued.Also, when a NYET handshake is received from the Peripheral, the interrupt transfer operates as an ACK receive.
The R8A66597 controller does not support high-bandwidth transfers in the interrupt transfer mode.

3.8.1 Interval Counter for Interrupt Transfer when Host Controller Function is Selected

3.8.1.1 Operation Outline

When an interrupt transfer is executed, the transaction interval is set in the **PIPEPERI** register **IITV** bit. The controller issues a token for the interrupt transfer in accordance with the set interval.

3.8.1.2 Counter Initialization

The controller initializes the interval counter under the following conditions.

(1) H/W reset
When **IITV** bit is initialized

(2) Buffer memory initialization by **ACLRM**
This will initialize the counter but not the **IITV** bit. Set the **ACLRM** bit to “0” to start the count of the **IITV** set value again.

Note that the interval counter will not be initialized in the following conditions.

(1) USB bus reset and USB suspend
These conditions do not initialize the **IITB** bit. Set the **UACT** bit to “1” to start the count from the value before the USB bus reset or USB suspend status.

3.8.1.3 Operations when send/receive are invalid at token issuance timing

A token will not be issued in the following conditions even at normal token issuance timing. If this kind of case occurs, the transaction will be attempted again at the next interval.

(1) When “NAK” or “STALL” is set in **PID** bit
(2) When there is no empty space in the buffer memory at the timing of sending a IN-direction (receive) transfer token
(3) When there is no data in the buffer memory at the timing of sending an OUT-direction (send) transfer token

3.9 Isochronous Transfer (Pipes 1-2)

The controller provides the following functions for isochronous transfers.

(1) Isochronous transfer error information notification
(2) Interval counter (**IITV** bit setting)
(3) Isochronous IN transfer data setup control (**IDLY** function)
(4) Isochronous IN transfer buffer flush function (**IFIS** bit setting)
(5) SOF pulse output function

The controller does not support high-bandwidth isochronous transfers. When transmitting an isochronous pipe in a split transaction, set a value of 188 bytes or less in the **MXPS** bit.

When the Host Controller Function is selected and isochronous transfers are being sent in two pipes at the same time, make sure the operation complies with the USB 2.0 Spec Section 5.6.3 Isochronous Transfer Packet Size Constraints.

Downloaded from Elcodis.com electronic components distributor

3.9.1 Isochronous Transfer Error Detection

The controller manages isochronous transfer errors by software and therefore has the following error information detection functions. Table 3.23 and Table 3.24 describe the procedure in which errors are confirmed and the interrupts that are generated.

(1) PID Error
When the receive packet PID is corrupted
(2) CRC Error and Bit Stuffing Error
When an error occurs in the receive packet CRC or when the bit stuffing is corrupted.
(3) Maximum Packet Size Over
This indicates the data size of the receive packet is larger than the value set for the maximum packet size.
(4) Overrun and Underrun
(a) When Host Controller Function is selected
When there is no empty space in the buffer memory at the token send timing for an IN-direction (receive) transfer
When there is no data in the buffer memory at the token send timing for an OUT-direction (send) transfer.
(b) When Peripheral Controller Function is selected
When there is no data in the buffer memory at an IN token receive for an IN-direction (send) transfer
When there is no empty space in the buffer memory at an OUT token receive for an OUT-direction (receive) transfer
(5) Interval Error
When Peripheral Controller Function is selected, the following will generate interval errors
(a) When an IN token could not be received in the interval frame of an isochronous IN transfer
(b) When an OUT token was received in other than the interval frame of an isochronous OUT transfer

Table 3.23 Errors Detected at Token Receive/Send

Priority of Detected Errors	Error Type	Generated Interrupts and Status at Time of Error Detection
1	PID error	No interrupt generated when either Host or Peripheral Controller function is selected (ignored as corrupted packet)
2	CRC error, bit stuffing error	No interrupt generated when either Host or Peripheral Controller function is selected (ignored as corrupted packet)
3	Overrun, underrun	NRDY interrupt is generated when either Host or Peripheral Controller function is selected, and OVRN bit is set. In Host Controller function selection, token issueing is continued when the interrupt is generated. In Peripheral Controller function, a zero-length packet is sent in response to an IN token. A data packet is not received in response to an OUT token.
4	Interval error	In Peripheral Controller function selection, NRDY interrupt is generated. In Host Controller function selection, no interrupt is generated.

Table 3.24 Errors Detected at Data Packet Receive

Priority of Detected Errors	Error Type	Generated Interrupts and Status
1	PID error	No interrupt generated (ignored as corrupted packet)
2	CRC error, bit stuffing error	NRDY interrupt is generated when either Host or Peripheral Controller function is selected, and CRCE bit is set.
3	Maximum packet size over error	BEMP interrupt is generated when either Host or Peripheral Controller function is selected, and PID is set to “STALL”.

Downloaded from Elcodis.com electronic components distributor

3.9.2 DATA-PID

The R8A66597 controller does not support high-bandwidth transfers. When the Peripheral Controller function is selected, the following occurs in response to a received PID.

(1) IN Direction
- (a) DATA0: sent as data packet PID
- (b) DATA1: not sent
- (c) DATA2: not sent
- (d) mDATA: not sent

(2) OUT Direction (in Full-Speed operation)
- (a) DATA0: received successfully as data packet PID
- (b) DATA1: received successfully as data packet PID
- (c) DATA2: ignored packet
- (d) mDATA: ignored packet

(3) OUT Direction (in Hi-Speed operation)
- (a) DATA0: received successfully as data packet PID
- (b) DATA1: received successfully as data packet PID
- (c) DATA2: received successfully as data packet PID
- (d) mDATA: received successfully as data packet PID

3.9.3 Interval Counter

3.9.3.1 Operation Outline

The isochronous transfer interval can be set in the **PIPEPERI** register **IITV** bit. Table 3.25 shows the functions of the interval counter when the Peripheral Controller function is selected. When the Host Controller function is selected, the interval counter generates the token issuance timing and the counter operations are the same as those in interrupt transfers. Refer to 3.8.1 for more details.

Table 3.25 Interval Counter Functions When Peripheral Controller Function Selected

Transfer Direction	Function	Detection Conditions
IN	Send buffer flush function	Cannot successfully receive IN token in interval frame in isochronous IN transfer
OUT	Token un-received notification	Cannot successfully receive OUT token in interval frame in isochronous OUT transfer

The interval count is executed for an SOF receive or a interpolated SOF. Therefore, when an SOF is damaged, the isochrony can still be maintained. Frame intervals are set as 2^{IITV} (u) frames.

3.9.3.2 Interval Counter Initialization when Peripheral Controller function is selected

The controller initializes the interval counter under the following conditions.

(1) H/W reset
Initializes the **IITV** bit.

(2) Buffer memory clear by **ACLRM** bit
This initializes the count but not the **IITV** bit. Set the **ACLRM** bit to “0” to start the count from the **IITV** set value.

After the interval counter is initialized and a packet is successfully transferred, the interval count starts under the following conditions.

(1) SOF is received after data is sent in response to an IN token in the “PID=BUF” status
(2) SOF is received after data is received in response to an OUT token in the “PID=BUF” status

Downloaded from Elcodis.com electronic components distributor

Note that the interval counter is not initialized in the following conditions.

(1) When the PID is set to NAK or STALL
The interval timer is not stopped at this time. The transaction will be attempted at the next interval.

(2) USB bus reset or USB suspend
The **IITV** bit is not initialized at this time. When the SOF is received, the count starts from the value before the receive.

3.9.4 Isochronous Transfer Send Data Setup when Peripheral Controller function is selected

When the Peripheral Controller function is selected, after data is written to the buffer memory in the isochronous transmission, the data packet can be sent out in the next frame detected after the SOF packet. This function, called the isochronous transfer send data setup function, allows the frame that started the send to be specified.
When using the buffer memory as a double buffer and both buffers have been written, only the first buffer memory to complete the write event is transfer-enabled. Therefore, even when several IN tokens are received in the same frame, only one packet of data is sent by the buffer memory.

When an IN token is received, if the buffer memory is in the send-enabled state, the data transfer will be sent and a normal response returned. However, if the buffer memory is not in the send-enabled state, a zero-length packet is sent and an underrun error occurs.

Figure 3.20 shows a controller send example using the isochronous transfer send data setup function when “IITV=0 (per frame)” is set.

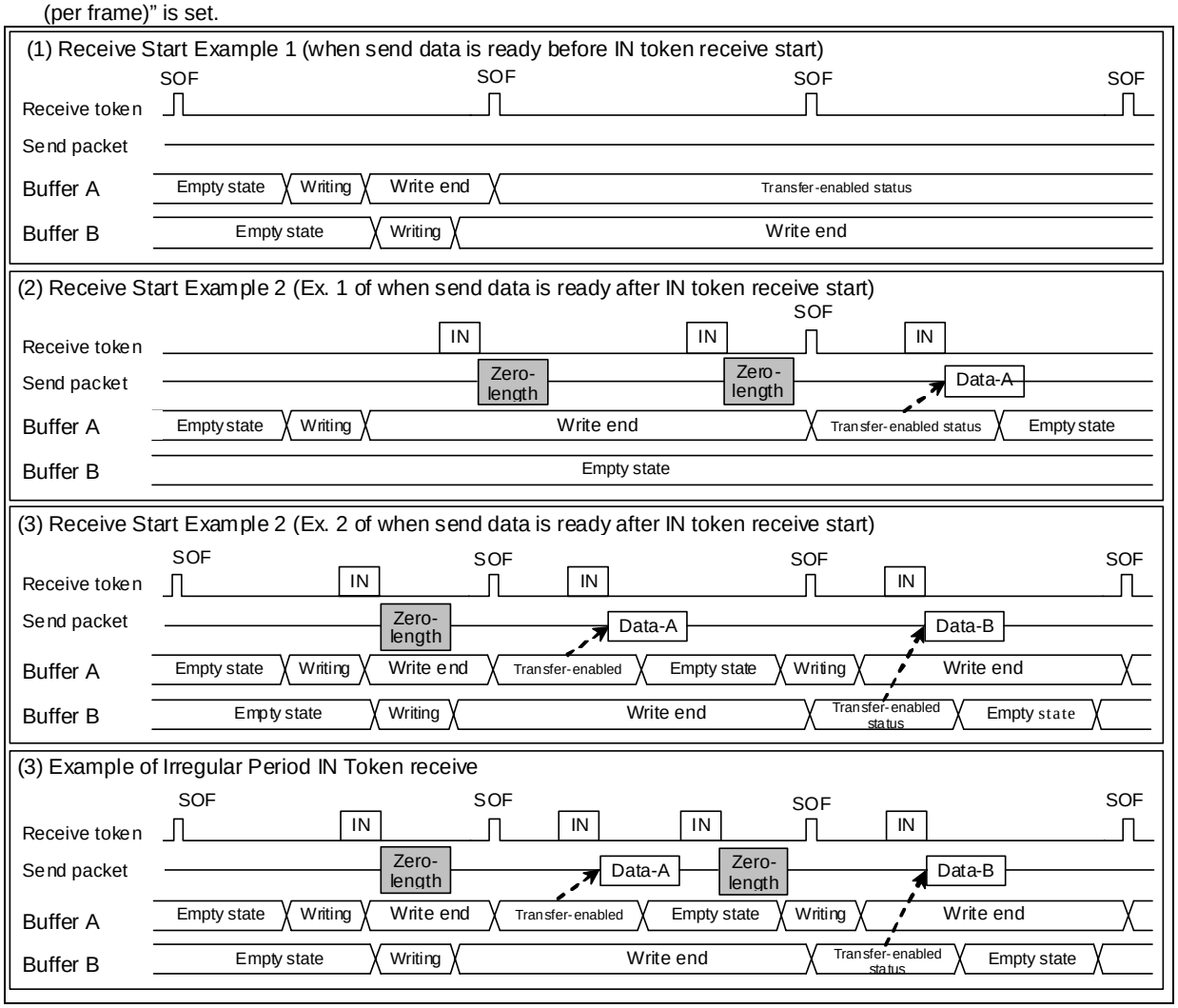

Figure 3.20 Data Setup Function Operation

Downloaded from Elcodis.com electronic components distributor

3.9.5 Isochronous Transfer Send Buffer Flush when Peripheral Controller function is selected

When the Peripheral Controller function is selected, if the controller does not receive an IN token in the interval frame in the isochronous data send but receives the (µ) SOF packet in the next frame, the IN token is handled as a corrupted token and the buffer that is send-enabled is cleared set to the write-enabled status.
At this time, if the double-buffer is used and the write event to both buffers is complete, the cleared buffer memory is assumed to be sent in the interval frame, and the other side buffer memory is set to the transfer-enabled status at the received the next (u) SOF packet.
The operation start timing of the buffer flush function differs according to the value set in the **IITV** bit, as follows.

(1) When IITV=0
The buffer flush operation is executed from the first frame after the pipe becomes valid.

(2) When IITV > 0
The buffer flush operation is executed after the first successful transaction.

Figure 3.21 provides an operation example of the controller buffer flush function. When a token is received outside of the specified interval period (before the interval frame), a written data packet or a zero-length packet is sent as an underrun error according to the data setup status

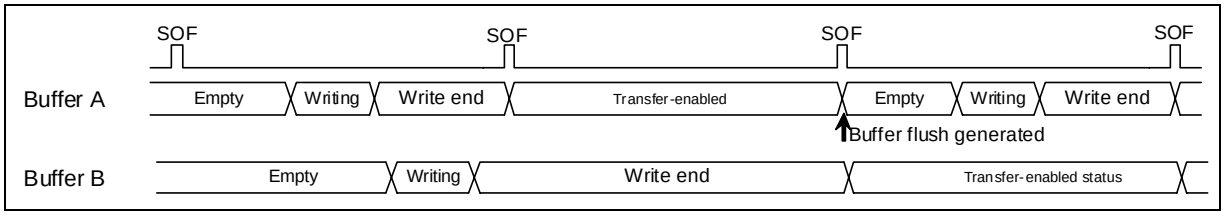

Figure 3.21 Buffer Flush Function Operation Example

Figure 3.22 shows an example of an interval error generated in the controller. There are 5 types of interval errors, as listed below. Timing 1 in the figure shows when the interval error occurs and how the buffer flush function operates. When an interval error occurs during an IN transfer, the buffer flush function goes into operation; during an OUT transfer, the **NRDY** interrupt is generated.
Use the **OVRN** bit to determine whether an error is an **NRDY** interrupt, such as a receive packet error, or an overrun error.
Responses to the tokens in the shaded boxes are executed in accordance to the buffer memory status.

(1) IN direction:
- (a) If buffer is in transfer-enabled status, data is transferred as a normal response
- (b) If buffer is in transfer-disabled status, zero-length packet is sent and underrun error occurs

(2) OUT direction:
- (a) If buffer is in receive-enabled status, data is received as a normal response
- (b) If buffer is in receive-disabled status, data is not received and overrun error occurs

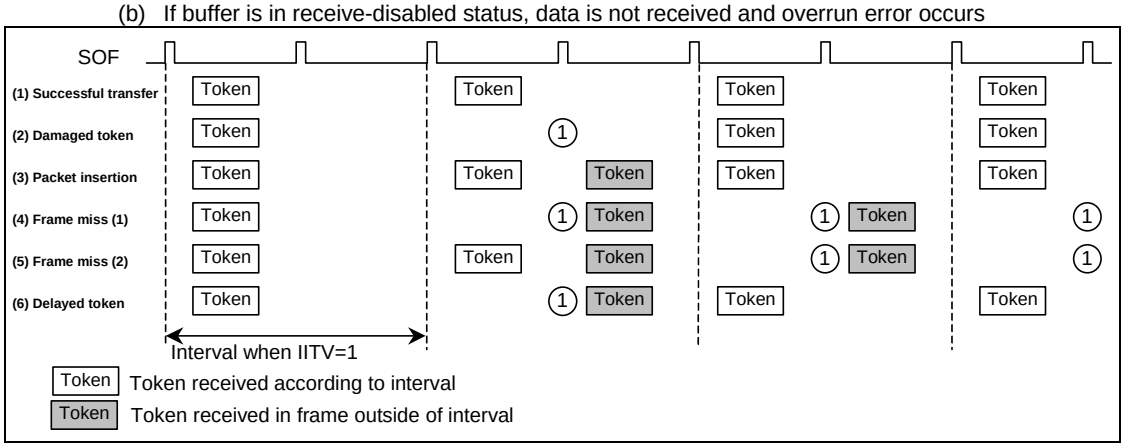

Figure 3.22 Interval Error Occurrence Example When "IITV=1"

Downloaded from Elcodis.com electronic components distributor

3.9.6 Isochronous Transfer Payload when Host Controller function is selected

When transferring a split-transaction in the isochronous pipe, set the **MXPS** bit to 188 bytes or less.
Split-transaction tranfers occur when a Full-Speed device that performs isochronous transfers is connected to the Hi-Speed hub connected to the controller. Figure 3.25 shows a connection example.
Table 3.26 shows the relation between the connection type and the maximum **MXPS** bit settings for the isochronous pipe.

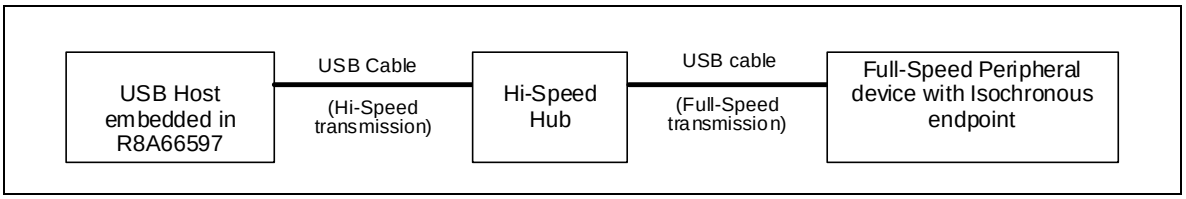

Figure 3.23 Connection Example of Split-Transaction Transfer

Table 3.26 Relation between Connection Type and Maximum of MXPS bit Setting for Isochronous Pipe

No.	Connection Type		Maximum value for MXPS bit setting
	Transfer speed between R8A66597 Controller and HUB	Transfer speed of peripheral device connected to Hub	
(1)	Hi-Speed	Hi-Speed	1024 bytes
(2)		Full-Speed	188 bytes
(3)	Full-Speed	Full-Speed	1023 bytes
(4)	No Hub	Hi-Speed	1024 bytes
(5)		Full-Speed	1023 bytes

3.10 SOF Interpolation Function

When using the Peripheral Controller function and a receive is unsuccessful in the 1ms (Full-Speed operation) or 125us (Hi-Speed operation) interval due to SOF packet damage or loss, the SOF is interpolated by the controller internally. The start condition of the SOF interpolation is "USBE=1", "SCKE=1" and SOF packet receive. The controller initializes the SOF interpolation function under the following conditions.

(1) H/W reset
(2) USB bus reset
(3) Suspend detection

The SOF interpolation operates according to the following specifications.

(1) Frame interval (125 us or 1ms) is based on the results of the reset handshake protocol.
(2) The interpolation function does not operate until the SOF packet is received.
(3) After the first SOF packet is received, the internal clock counts 125us or 1ms at 48MHz, then interpolates.
(4) Interpolation is performed in the previous receive intervals after the 2nd and later SOF packets are received.
(5) Interpolation is not performed in the suspend state or during a USB bus reset receive.
When the controller goes to the suspend state in Hi-Speed operation, interpolation continues after 3ms from the last packet.

The SOF interpolation function runs in the following functions.

(1) Frame number or micro-frame number update
(2) **SOFR** interrupt timing, µSOF lock
(3) SOF pulse output
(4) Isochronous transfer interval count

When an SOF packet is lost during Full-Speed operation, the **FRMNUM** register **FRNM** bit is not updated.
When a µSOF packet is lost during Hi-Speed operation, the **UFRMNUM** register **UFRNM** bit is updated.
However, when a “µFRNM=000” µSOF packet is lost, the **FRNM** bit is not updated. At this time, even if µSOF packets other than the “µFRNM=000” packet are received successfully, the **FRNM** bit is not updated.

Downloaded from Elcodis.com electronic components distributor

3.10.1 SOF Pulse Output

When SOF output is enabled, the controller outputs the SOF pulse according to the SOF timing.
SOF pulse output is valid when either the Host or Peripheral Controller Function is selected.
When the value of the **SOFCFG** register **OSFM** bit is “01” (1ms SOF) or “10” (125µs SOF), the pulse is output in the “L” active state from the **SOF N** pin. This is called the “SOF signal”. For more details concerning the pulse timing, refer to Figure 3.24. When using the Peripheral Controller function, SOF packet receive or SOF output due to “SOF interpolation” are output at even intervals.

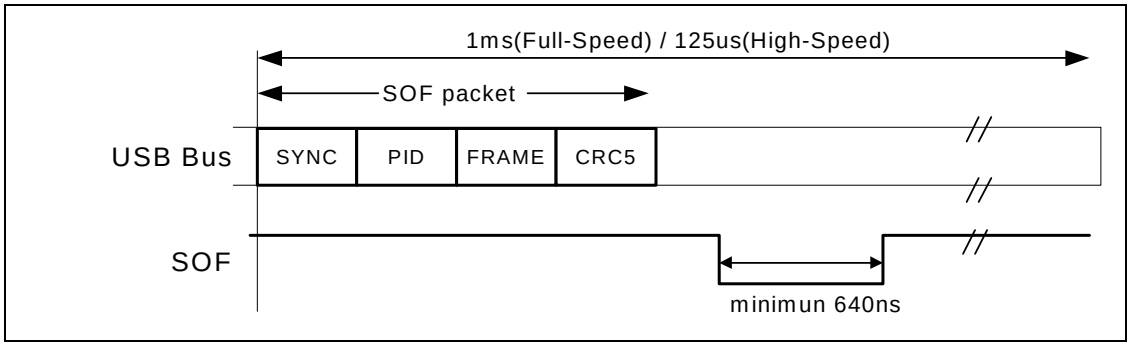

Figure 3.24 SOF Output Timing

Downloaded from Elcodis.com electronic components distributor

3.11 Pipe Schedule

3.11.1 Transaction Issuance Conditions

When the Host Controller function is selected, the controller supplies the internal clock and transactions are issued in the following conditions after “UACT=1” is set.

Table 3.27 Transaction Issuance Conditions

Transaction	Issuance Conditions				
	DIR	PID	IITV *2)	Buffer status	SUREQ
Setup					Set “1”
Control transfer data stage, status stage, and bulk transfer	IN	BUF	invalid	Receive area available	
	OUT	BUF	invalid	Send data in buffer	
Interrupt transfer	IN	BUF	valid	Receive area available	
	OUT	BUF	valid	Send data in buffer	
Isochronous transfer	IN	BUF	valid	*3)	
	OUT	BUF	valid	*4)	

***1)** Slanted lines indicate this condition does not affect issuing of token.
***2)** ”Valid” indicates transaction is issued only in transfer frame by interval counter in interrupt and isochronous transfers. “Invalid” indicates transfer is issued regardless of interval counter.
***3)** Transaction is issued regardless of available receive area. The receive data will be corrupted if no receive area is available.
***4)** Transaction is issued regardless of send data in buffer. A zero-length packet will be sent if the is no send data.

3.11.2 Transfer Schedule

The following is a description of the scheduling method for transfers in a frames. The controller conducts transfers in the following order after the SOF is sent. When using two ports and the combination of Port0 and Port1 transfer speeds are the same as case (3) or (4) shown in Table 3.4, the scheduling is split between 2 lines. Each line is scheduled in the order of steps (1) to (3). When the combination of Port0 and Port1 transfer speeds match cases (1) or (2), the scheduling is performed in one line.

(1) Periodic transfer execution
The controller searches pipes in the following order until it finds a pipe enabled to issue an isochronous or interrupt transfer transaction: Pipe 1→ Pipe 2→ Pipe 6→ Pipe 7→ Pipe 8→ Pipe 9. When it finds an enabled pipe, the transaction is issued.

(2) Control transfer setup transaction
The controller confirms the DCP. If it is setup transaction enabled, the setup packet is sent.

(3) Bulk transfers, Data stage or status stage of the control transfer execution
The controller searches the pipes in the order below. When it finds a pipe enabled for transaction in the bulk or control transfer data stage or the control transfer status stage, the transaction is executed.

Search order: DCP → Pipe 1→ Pipe 2→ Pipe 3→ Pipe 4→ Pipe 5

When the transaction is issued, the sequence goes on to the transaction in the next pipe whether the response from the peripheral is ACK or NAK. Also, if there is time in the frame to execute another transfer, step (3) is repeated.

3.11.3 USB Transmission Enable

Setting the **DVSTCTR** register **UACT** bit to “1” starts the SOF or µSOF send and enables the transaction issuance. Setting the **UACT** bit to “0” the controller stops the SOF or µSOF send and put the USB bus in the suspend status.

Downloaded from Elcodis.com electronic components distributor

When the **UACT** bit is switched from “1” to “0”, transfer is stopped after the next SOF or µSOF is sent.

Downloaded from Elcodis.com electronic components distributor

3.12 USB Connector Connection example

Figure 3.25shows an example of the connection between the controller and USB connector when the Host Controller function is selected, and Figure 3.26 shows an example of when the Peripheral Controller function is selected.

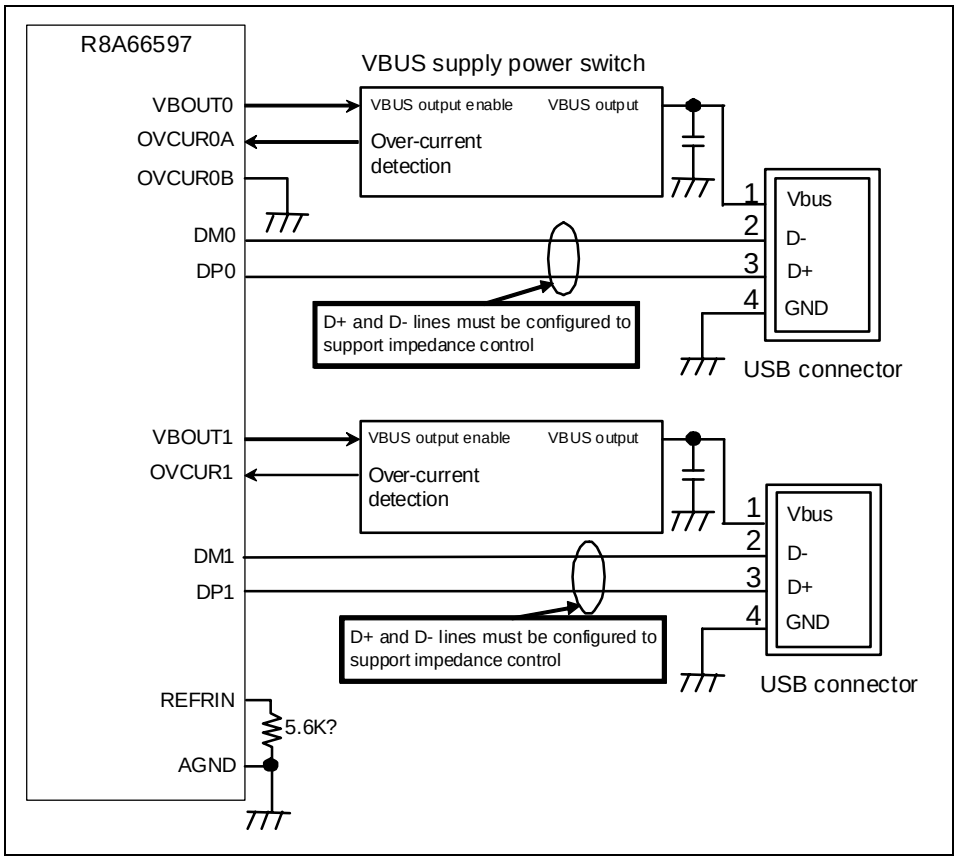

Figure 3.25 USB Connector Connection Example when Host Controller Function is Selected

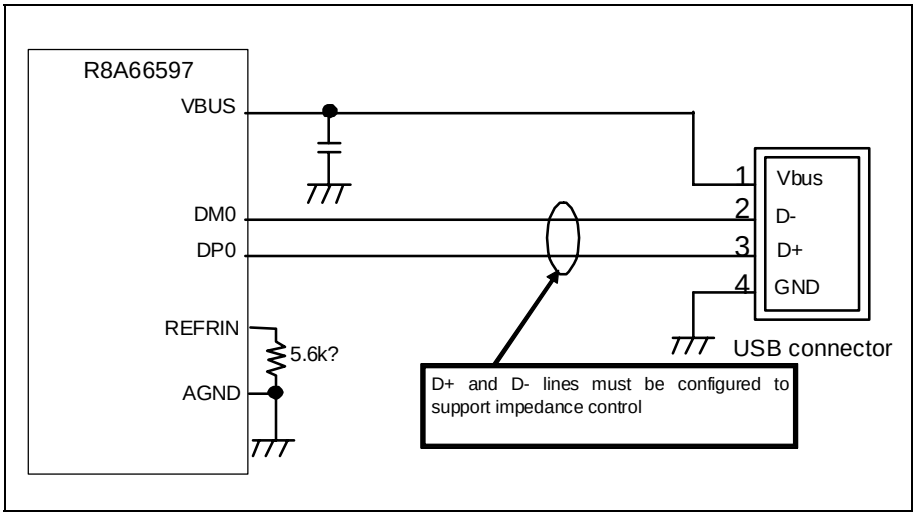

Figure 3.26 USB Connector Connection Example when Peripheral Controller Function is Selected

Downloaded from Elcodis.com electronic components distributor

4 Electrical Characteristics

4.1 Absolute Maximum Ratings

Symbol	Item	Rated vlalue	Unit
VIF	IO power supply voltage	-0.3 ~ +4.0	V
VCC	Power supply voltage (3.3V)	-0.3 ~ +4.0	V
AVCC	Analog power supply voltage (3.3V)	-0.3 ~ +4.0	V
VBUS	VBUS input voltage	-0.3 ~ +5.5	V
V_I(IO)	System interface input voltage	-0.3 ~ VIF+0.3, VCC+0.3	V
V_O(IO)	System interface output voltage	-0.3 ~ VIF+0.3, VCC+0.3	V
Pd	Power consumption	600	mW
Tstg	Storage temperature	-55 ~ +150	degrees Celcius

4.2 Recommended Operating Conditions

Symbol	Item		Rated value			Unit
			Minimum	Average	Maximum	
VIF	IO power supply voltage	1.8V supported	1.6	1.8	2.0	V
		3.3V supported	2.7	3.3	3.6	V
VCC	Power supply voltage (3.3V)		3.0	3.3	3.6	V
AVCC	Analog power supply voltage (3.3V)		3.0	3.3	3.6	V
AGND	Analog power supply GND			0		V
GND	Power supply GND			0		V
V_I(IO)	System interfaceinput voltage		0		VIF, VCC	V
V_I(VBUS)	Input voltage (VBUS input only)		0		5.25	V
V_O(IO)	System interface output voltage		0		VIF, VCC	V
Topr	Ambient operating temperatrure	R8A66597FP (Standard items)	-20	+25	+85	degrees Celcius
		R8A66597DFP (Optional items with wide temperature range)	-40	+25	+85	degrees Celcius
tr, tf	Input rise, fall times	Normal input			500	ns
		Schmitt Trigger input			5	ms

Downloaded from Elcodis.com electronic components distributor

4.3 Electrical Characteristics (ratings for VIF = 2.7~3.6V)

Symbol	Item		Measurement conditions		Rated value			Unit
					Minimum	Typical	Maximum	
V_{IH}	"H" input voltage	Note 1	VCC = 3.6V		2.52		3.6	V
V_{IL}	"L" input voltage		VCC = 3.0V		0		0.9	V
V_{IH}	"H" input voltage	Note 2	VIF = 3.6V		0.7VIF		3.6	V
V_{IL}	"L" input voltage		VIF = 2.7V		0		0.3VIF	V
VT+	Threshold voltage in positive direction	Note 3	VIF = 3.3V		1.4		2.4	V
VT-	Threshold voltage in negative direction				0.5		1.65	V
VTH	Hysteresis voltage					0.8		V
V_{OH}	"H" output voltage	Xout	VCC = 3.0V	I_{OH} = -50uA	2.6			V
V_{OL}	"L" output voltage			I_{OL} = 50uA			0.4	V
V_{OH}	"H" output voltage	Note 4	VCC = 3.0V	I_{OH} = -2mA	VCC-0.4			V
V_{OL}	"L" output voltage			I_{OL} = 2mA			0.4	V
V_{OH}	"H" output voltage	Note 5	VIF = 2.7V	I_{OH} = -4mA	VIF-0.4			V
V_{OL}	"L" output voltage			I_{OL} = 4mA			0.4	V
V_{OH}	"H" output voltage	Note 6	VIF = 2.7V	I_{OH} = -2mA	VIF-0.4			V
V_{OL}	"L" output voltage			I_{OL} = 2mA			0.4	V
VT+	Threshold voltage in positive direction	VBUS	VCC = 3.3V		1.4		2.4	V
VT-	Threshold voltage in negative direction				0.5		1.65	V
I_{IH}	"H" input current		VIF,VCC = 3.6V	V_I = VIF,VCC			10	uA
I_{IL}	"L" input current			V_I = GND			-10	uA
I_{OZH}	"H" output current in off stauts	Note 7	VIF = 3.6V	V_O = VIF			10	uA
I_{OZL}	"L" output current in off stauts			V_O = GND			-10	uA
Rdv	Pull-down resistance	VBUS				500		kΩ
Icc(A)	Average supply current during HS operation	Note 8	f(X_{in}) = 48MHz VIF, VCC, AVCC = 3.6V USB Port 1-0 = HS operations			70		mA
Icc(A)	Average supply current during FS/LS operation	Note 8	f(X_{in}) = 48MHz VIF, VCC, AVCC = 3.6V USB Port 1-0 = FS/LS operation			22		mA
Icc(S)	Supply current in static mode	Note 8	USB suspend status (Host Controller function) VIF = 3.6V			0.15		mA
			USB suspend status (Peripheral Controller function) VIF = 3.6V			0.35		mA
			USB cable detached VIF = 3.6V			0.15		mA
C_{IN}	Pin capacitance (Input)					7		pF
C_{OUT}	Pin capacitance (Output / I/O)					7		pF

Note 1: X_{in}, OVCUR1, ID0, OVCUR0A, OVCUR0B input pins
Note 2: MPBUS, A7-1, input pin and DEND0-1_N, SD7-0, D15-0 input/output pin
Note 3: DACK0-1_N, RST_N, RD_N, WR0-1_N, CS_N input pin
Note 4: VBOUT0-1, EXTLP0 output pins
Note 5: DREQ0-1_N output pin, and DEND0-1_N, SD7-0, D15-0 input/output pin
Note 6: INT_N,SOF_N output pin
Note 7: DEND0-1_N, SD7-0, D15-0 input/output pins
Note 8: Supply current is the total of VIF, VCC, and AVCC currents

Downloaded from Elcodis.com electronic components distributor

4.4 Electrical Characteristics (Ratings for VIF = 1.6 ~ 2.0V)

Symbol	Item		Measurement conditions		Rated value			Unit
					Minimum	Typical	Maximum	
V_{IH}	"H" input voltage	Note 1	VCC = 3.6V		2.52		3.6	V
V_{IL}	"L" input voltage		VCC = 3.0V		0		0.9	V
V_{IH}	"H" input voltage	Note 2	VIF = 2.0V		0.7VIF		3.6	V
V_{IL}	"L" input voltage		VIF = 1.6V		0		0.3VIF	V
VT+	Threshold voltage in positive direction	Note 3	VIF = 1.8V		0.7		1.4	V
VT-	Threshold voltage in negative direction				0.2		0.8	V
VTH	Hysteresis voltage					0.5		V
V_{OH}	"H" output voltage	Xout	VCC = 3.0V	I_{OH} = -50uA	2.6			V
V_{OL}	"L" output voltage			I_{OL} = 50uA			0.4	V
V_{OH}	"H" output voltage	Note 4	VCC = 3.0V	I_{OH} = -2mA	VCC-0.4			V
V_{OL}	"L" output voltage			I_{OL} = 2mA			0.4	V
V_{OH}	"H" output voltage	Note 5	VIF = 1.6V	I_{OH} = -4mA	VIF-0.4			V
V_{OL}	"L" output voltage			I_{OL} = 4mA			0.4	V
V_{OH}	"H" output voltage	Note 6	VIF = 1.6V	I_{OH} = -2mA	VIF-0.4			V
V_{OL}	"L" output voltage			I_{OL} = 2mA			0.4	V
VT+	Threshold voltage in positive direction	VBUS	VCC = 3.3V		1.4		2.4	V
VT-	Threshold voltage in negative direction				0.5		1.65	V
I_{IH}	"H" input current		VIF = 2.0V VCC = 3.6V	V_I = VIF,VCC			10	uA
I_{IL}	"L" input current			V_I = GND			-10	uA
I_{OZH}	"H" output current in off stauts	Note 7	VIF = 2.0V	V_O = VIF			10	uA
I_{OZL}	"L" output current in off stauts			V_O = GND			-10	uA
Rdv	Pull-down resistance	VBUS				500		kΩ
Icc(A)	Average supply current during HS operation	Note 8	f(X_{in}) = 48MHz VIF=2.0V, VCC, AVCC = 3.6V USB Port 1-0 = HS operations			70		mA
Icc(A)	Average supply current during FS/LS operations	Note 8	f(X_{in}) = 48MHz VIF=2.0V,VCC,AVCC = 3.6V USB Port 1-0 = FS/LS operations			20		mA
Icc(S)	Supply current in static mode	Note 8	USB suspend status (Host Controller function) VIF = 2.0V			0.15		mA
			USB suspend status (Peripheral Controller function) VIF = 2.0V			0.35		mA
			USB cable detached status VIF = 2.0V			0.15		mA
C_{IN}	Pin capacitance (Input)					7		pF
C_{OUT}	Pin capacitance (Output / I/O)					7		pF

Note 1: X_{in},OVCUR1, ID0, OVCUR0A, and OVCUR0B input pins
Note 2: MPBUS, A7-1, input pin, and DEND0-1_N, SD7-0, D15-0 input/output pins
Note 3: DACK0-1_N, RST_N, RD_N, WR0-1_N, CS_N input pins
Note 4: VBOUT0-1, EXTLP0 output pin
Note 5: DREQ0-1_N output pin, and DEND0-1_N, SD7-0, D15-0 input/output pin
Note 6: INT_N,SOF_N output pin
Note 7: DEND0-1_N, SD7-0, D15-0 input/output pins
Note 8: Supply current is the total of VIF, VCC, and AVCC currents

Downloaded from Elcodis.com electronic components distributor

4.5 Measurement Circuit

4.5.1 Pins except USB buffer section

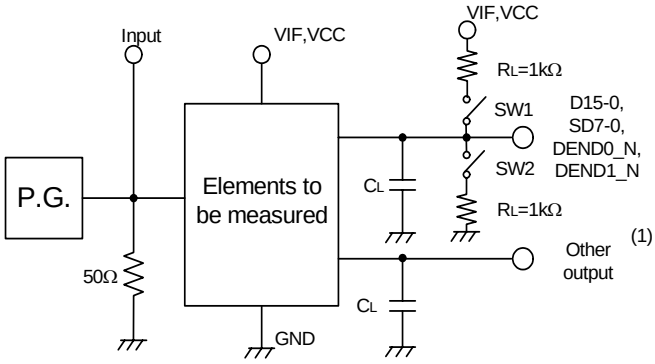

Item	SW1	SW2
tdis(CTRL(LZ))	Closed	Open
tdis(CTRL(HZ))	Open	Closed
ta(CTRL(ZL))	Closed	Open
ta(CTRL(ZH))	Open	Closed

(1) Input pulse level: 0-3.3V, 0-1.8V
Input pulse rise/fall time: tr, tf = 3ns
Input timing standard voltage: VIF/2, VCC/2
Output timing judge voltage: VIF/2, VCC/2
(The tdis(LZ) is judged by 10% of the output amplitude and the tdis (HZ) by 90% of the output amplitude.)

(2) The electrostatic capacity CL includes the stray capacitance of the wire connection and the input capacitance of the probe.

4.5.2 USB buffer block (Peripheral Controller function , Full-Speed)

(1) The tr and tf are judged by the transition time of the 10% amplitude point and 90% amplitude point respectively.

(2) The electrostatic capacity CL includes the stray capacitance of the wire connection and the input capacitance of the probe.

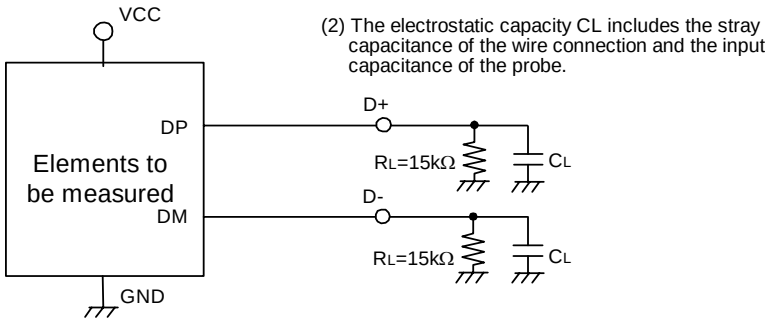

4.5.3 USB buffer block (Hi-Speed)

(1) The tr and tf are judged by the transition time of the 10% amplitude point and 90% amplitude point respectively

(2) The electrostatic capacity CL includes the stray capacitance of the wire connection and the input capacitance of the probe.

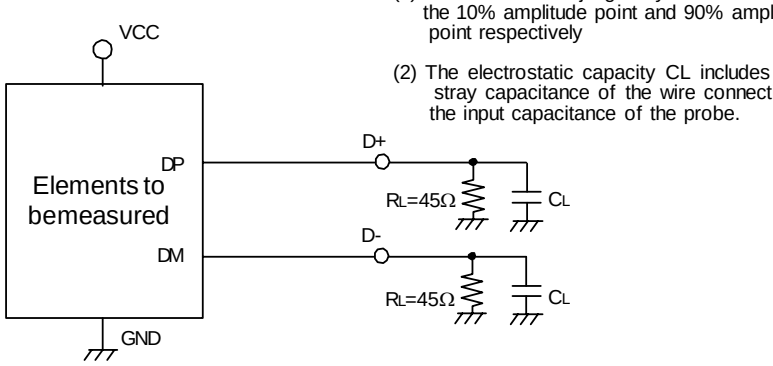

Downloaded from Elcodis.com electronic components distributor

4.6 Electrical Characteristics (D+/D-)

4.6.1 DC characteristics

Symbol	Item	Measurement conditions		Rated value			Unit
				Minimum	Typical	Maximum	
R_{REF}	Reference resistance			5.544	5.6	5.656	kΩ
R_o	FS driver output impedance	HS operation		40.5	45	49.5	Ω
		FS operation		28	36	44	Ω
R_{pu}	D+, D- pull-up resistance (Peripheral Controller function)	Idle status		0.9		1.575	kΩ
		Transmitting and receiving status		1.425		3.09	kΩ
R_{pd}	D+, D- Pull-down resistance (Host Controller function)			14.25		24.80	kΩ
Input characteristics for Full-Speed/Low-Speed operation							
V_{IH}	"H" input voltage			2.0			V
V_{IL}	"L" input voltage					0.8	V
V_{DI}	Differential input sensitivity	| (D+) - (D-) |		0.2			V
V_{CM}	Differential common mode range			0.8		2.5	V
Output characteristics for Full-Speed/Low-Speed operations							
V_{OL}	"L" output voltage	VCC = 3.0V	RL of 1.5KΩ to 3.6V			0.3	V
V_{OH}	"H" output voltage		RL of 15KΩ to GND	2.8		3.6	V
V_{SE}	Single-ended receiver threshold voltage			0.8		2.0	V
V_{ORS}	Output signal crossover voltage			1.3		2.0	V
Input characteristics for Hi-Speed operations							
V_{HSSQ}	Squelch detection threshold voltage (differential)			100		150	mV
V_{HSCM}	Common mode voltage range			-50		500	mV
Output characteristics for Hi-Speed operations							
V_{HSOI}	Idle status			-10.0		10	mV
V_{HSOH}	"H" output voltage			360		440	mV
V_{HSOL}	"L" output voltage			-10.0		10	mV
V_{CHIRPJ}	Chirp–J output voltage (differential)			700		1100	mV
V_{CHIRPK}	Chirp–K output voltage (differential)			-900		-500	mV

Downloaded from Elcodis.com electronic components distributor

4.6.2 AC characteristics (Full-Speed)

Symbol	Item	Measurement conditions		Rated value			Unit
				Minimum	Typical	Maximum	
Tr	Rise transition time	10%→90% of the data signal amplitude	CL=50pF	4		20	ns
Tf	Fall transition time	90%→10% of the data signal amplitude	CL=50pF	4		20	ns
TRFM	Rise/Fall time matching	Tr/Tf		90		111.11	%

4.6.3 AC characteristics (Low-Speed)

Symbol	Item	Measurement conditions	Rated value			Unit
			Minimum	Typical	Maximum	
Tr	Rise transition time	10%→90% of the data signal amplitude	75		300	ns
Tf	Fall transition time	90%→10% of the data signal amplitude	75		300	ns
TRFM	Rise/Fall time matching	Tr/Tf	80		125	%

Downloaded from Elcodis.com electronic components distributor

4.7 Power Sequence, Reset Timming

4.7.1 Power Sequence

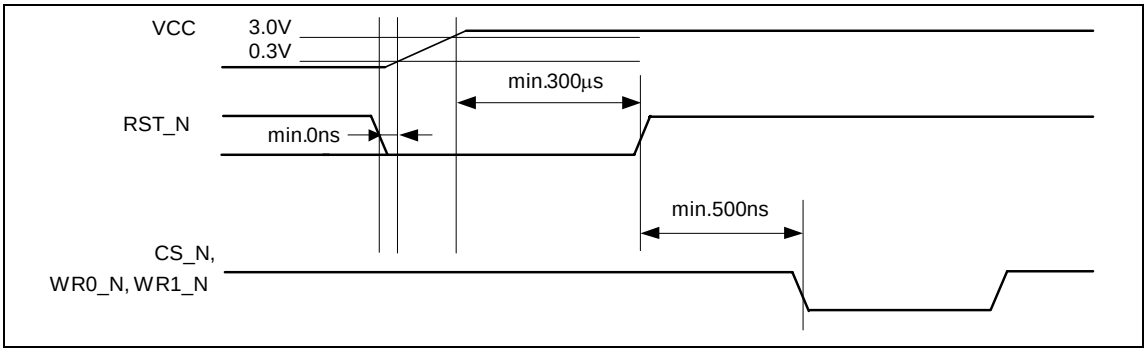

Note: Simultaneous Power-on and Power-off is recommended for VCC and AVCC. VIF Power-on timing is recommended to be simultaneous with VCC and AVCC, or to be earlier than VCC and AVCC. The VIF Power-off timing is recommended to be simultaneous with VCC and AVCC, or to be later than VCC and AVCC.
Reset with RST_N is a must. If this sequence can't keep, normal operating is not guaranteed that even with conduct the operation of Reset timing of the chapter 4.7.2.

4.7.2 Reset timing of VCC=On status

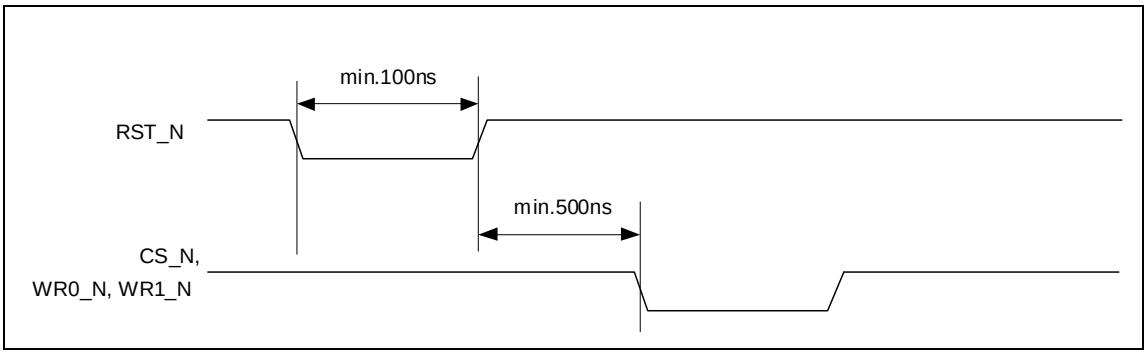

Downloaded from Elcodis.com electronic components distributor

4.8 Switching Characteristic (VIF = 2.7~3.6V, or 1.6~2.0V)

Symbol	Item	Measurement conditions,etc.	Rated value			Unit	Reference Number
			Minimum	Typical	Maximum		
ta (A)	Address access time	CL=50pF			30	ns	1
tv (A)	Time that data is valid after address	CL=10pF	2			ns	2
ta (CTRL - D)	Time that data can be accessed after control	CL=50pF			30	ns	3
tv (CTRL - D)	Time that data is valid after control	CL=10pF	2			ns	4
ten (CTRL - D)	Time that data output is enabled after control		2			ns	5
tdis (CTRL - D)	Time that data output is disabled after control	CL=50pF			30	ns	6
ta (CTRL - DV)	Time that data can be accessed after control when split bus (DMA Interface) Obus=0	CL=30pF			30	ns	9
tv (CTRL – DV)	Time that data can is valid after control when split bus (DMA Interface) Obus=0	CL=10pF	2			ns	10
ta (CTRL - DendV)	Time that DEND output can be accessed after control when split bus (DMA Interface) Obus=0	CL=30pF			30	ns	11
tv (CTRL - DendV)	Time that DEND output is valid after control when CPU bus and split bus (DMA Interface) Obus=0	CL=10pF	2			ns	12
ta (CTRL - Dend)	Time that DEND output can be accessed after control when split bus (DMA Interface) Obus=1	CL=30pF			30	ns	13
tv (CTRL – Dend)	Time that DEND output is valid after control when CPU bus and split bus (DMA Interface) Obus=1	CL=10pF	2			ns	14
ten (CTRL – Dend)	Time that DEND output is enabled after control when CPU bus and split bus (DMA Interface) Obus=1		2			ns	15
tdis (CTRL-Dend)	Time that DEND output is disabled after control when CPU bus and split bus (DMA Interface) Obus=1	CL=30pF			30	ns	16
tdis (CTRL – Dreq)	Time that DREQ is disabled after control				30	ns	17
tdis (CTRLH –Dreq)	Time that DREQ is disabled after writing in DEND input is completed and control is completed				30	ns	18
ten (CTRL – Dreq)	Time that DREQ is enabled after control		20		70	ns	19
twh (Dreq)	DREQ output "H" pulse width		20		50	ns	20
td (CTRL - INT)	INT output negated delay time				250	ns	21
twh (INT)	INT output "H" pulse width		650			ns	22
td (DREQ - DV)	Data access after DREQ begins to be asserted when split bus (DMA Interface) Obus=0				0	ns	23
td (Dreq - DendV)	DEND output determination time after starting DREQ assert, when Split bus (DMA Interface) Obus=0 or CPU BUS1, 2				0	ns	24
tdis (PCTRLH - Dreq)	Time that DREQ is disabled after end of previous control				70	ns	25

Key: ta: Access time, tv: Valid time, ten: Output enabled time, tdis: Output disabled time,
(A): Address, (D): Data, (Dend): DiEND_N, (Dreq): DiREQ_N, (CTRL): Control, (V): Obus=0

Downloaded from Elcodis.com electronic components distributor

4.9 Required Timing Conditions (VIF = 2.7~3.6V, or 1.6~2.0V)

Symbol	Item		Measurement conditions, etc.	Rated value Minimum	Typical	Maximum	Unit	Reference number
tsuw (A)	Address write setup time		CL=50pF	10			ns	30
tsur (A)	Address read setup time			0			ns	31
tsu (A - ALE)	Address setup time when using multiplex bus			10			ns	32
thw (A)	Address write hold time			0			ns	33
thr (A)	Address read hold time			10			ns	34
th (A - ALE)	Address setup hold time when using multiplex bus			0			ns	35
tw (ALE)	ALE pulse width when using multiplex bus			10			ns	36
tdwr (ALE - CTRL)	Write/Read delay time when using multiplex bus			7			ns	37
trec (ALE)	ALE recovery time when using multiplex bus			0			ns	38
tw (CTRL)	Control pulse width (write)			30			ns	39
trec (CTRL)	Control recovery time (FIFO)	When using DMA interface cycle steal		30			ns	40
		Other than above mentioned		12			ns	
trecr (CTRL)	Control recovery time (REG)			12			ns	41
twr (CTRL)	Control pulse width (read)			30			ns	42
tsu (D)	Data setup time			10			ns	43
th (D)	Data hold time			0			ns	44
tsu (Dend)	DEND input setup time			10			ns	45
th (Dend)	DEND input hold time			0			ns	46
tw (cycle1)	FIFO/register access cycle time	8/16-bit FIFO access (Separate bus) (Other than cases corresponding to 47-2)		60			ns	47-1
		8/16-bit FIFO access (Multiplex bus)		84			ns	
tw (cycle2)	FIFO access cycle time only when DMA interface DACKi_N is used	8-bit FIFO access		30			ns	47-2
		16-bit FIFO access		50			ns	
tw (CTRL_B)	Control pulse width when using burst transfers	When using split bus and Obus=0		12			ns	48
		When using split bus and Obus=1 (see Note)		30			ns	
		When using DMA transfers with CPU bus		30			ns	
trec (CTRL_B)	Control recovery time for burst transfers			12			ns	49
tsud (A)	DMA address write setup time			10			ns	50
thd (A)	DMA address write hold time			0			ns	51
tw (RST)	Reset pulse width time			100			ns	52
tst (RST)	Control starts width time after reset			500			ns	53

Downloaded from Elcodis.com electronic components distributor

Key tsuw: Write setup time, tsur: Read setup time, tsu: setup time
thw: Write hold time, thr: Read hold time, th: hold time, tw: Pulse width, twr: Read pulse width
tdwr: Read/Write delay time, trec: Recovery time, trecr: Register recovery time
tsud: DMA setup time, thd: DMA hold time, tst: start time
(A): Address, (D): Data, (CTRL): Control, (CTRL_B): Burst control, (ALE): ALE

Downloaded from Elcodis.com electronic components distributor

4.10 Timing Diagrams

4.10.1 Index for register access timing diagram

Bus Specifications	Access	R/W	Index	Note
Separate bus	CPU	WRITE	4.11.1.1	CPU bus 0
Separate bus	CPU	READ	4.11.1.2	CPU bus 0
Multiplex bus	CPU	WRITE	4.11.2.1	CPU bus 0
Multiplex bus	CPU	READ	4.11.2.2	CPU bus 0

4.10.2 Index for FIFO port access timing

Access	Bus I/F Specifications	I/F Specifications When Operating	DFORM Bit Set Value	OBUS Bit Set Value	R/W	Note	Index
CPU	CPU bus 0	Separate bus	-		Write	-	
CPU	CPU bus 0	Separate bus	-		Read	-	4.11.1.2
CPU	CPU bus 0	Multiplex bus	-		Write	-	4.11.2.1
CPU	CPU bus 0	Multiplex bus	-		Read	-	4.11.2.2
DMA	CPU bus 2	Acknowledgement + RD/WR	010		Write	Cycle steal transfer	4.11.3.1 *1
DMA	CPU bus 2	Acknowledgement + RD/WR	010		Read	Cycle steal transfer	4.11.3.2 *1
DMA	CPU bus 1	Separate bus	000		Write	Cycle steal transfer	4.11.3.3
DMA	CPU bus 1	Separate bus	000		Read	Cycle steal transfer	4.11.3.4
DMA	SPLIT bus 2	Acknowledgement only	100	1	Write	Cycle steal transfer	4.11.3.5 *1
DMA	SPLIT bus 2	Acknowledgement only	100	1	Read	Cycle steal transfer	4.11.3.6 *1
DMA	SPLIT bus 2	Acknowledgement only	100	0	Write	Cycle steal transfer	4.11.3.5 *1
DMA	SPLIT bus 2	Acknowledgement only	100	0	Read	Cycle steal transfer	4.11.3.7 *1
DMA	CPU bus 3	Acknowledgement only	011		Write	Cycle steal transfer	4.11.3.8 *1
DMA	CPU bus 3	Acknowledgement only	011		Read	Cycle steal transfer	4.11.3.9 *1
DMA	CPU bus 1	Multiplex bus	000		Write	Cycle steal transfer	4.11.4.1
DMA	CPU bus 1	Multiplex bus	000		Read	Cycle steal transfer	4.11.4.2
DMA	CPU bus 2	Acknowledgement + RD/WR	010		Write	Burst transfer	4.11.5.1 *1
DMA	CPU bus 2	Acknowledgement + RD/WR	010		Read	Burst transfer	4.11.5.2 *1
DMA	CPU bus 1	Separate bus	000		Write	Burst transfer	4.11.5.3
DMA	CPU bus 1	Separate bus	000		Read	Burst transfer	4.11.5.4
DMA	SPLIT bus 2	Acknowledgement only	100	1	Write	Burst transfer	4.11.5.5 *1
DMA	SPLIT bus 2	Acknowledgement only	100	1	Read	Burst transfer	4.11.5.6 *1
DMA	SPLIT bus 2	Acknowledgement only	100	1	Write	Burst transfer	4.11.5.5 *1
DMA	SPLIT bus 2	Acknowledgement only	100	1	Read	Burst transfer	4.11.5.6 *1
DMA	SPLIT bus 2	Acknowledgement only	100	0	Write	Burst transfer	4.11.5.5 *1
DMA	SPLIT bus 2	Acknowledgement only	100	0	Read	Burst transfer	4.11.5.7 *1
DMA	CPU bus 3	Acknowledgement only	011		Write	Burst transfer	4.11.5.8 *1
DMA	CPU bus 3	Acknowledgement only	011		Read	Burst transfer	4.11.5.9 *1
DMA	CPU bus 1	Multiplex bus	000		Write	Burst transfer	4.11.6.1
DMA	CPU bus 1	Multiplex bus	000		Read	Burst transfer	4.11.6.2

Note: *1) Because the address signal is not used, the timing will be the same for the separate bus and multiplex bus.
※ The reading and writing timing are carried out using a control signal. If the control signal is configured from a combination of multiple signals, the rating from the falling edge will be valid starting from when the active delay signal changes. The ratings from the rising edge will be valid starting from the change in signals that become inactive more quickly.

Downloaded from Elcodis.com electronic components distributor

4.11 Timing Diagram

4.11.1 CPU access timing (when a separate bus is set)

4.11.1.1 CPU access write timing (when a separate bus is set)

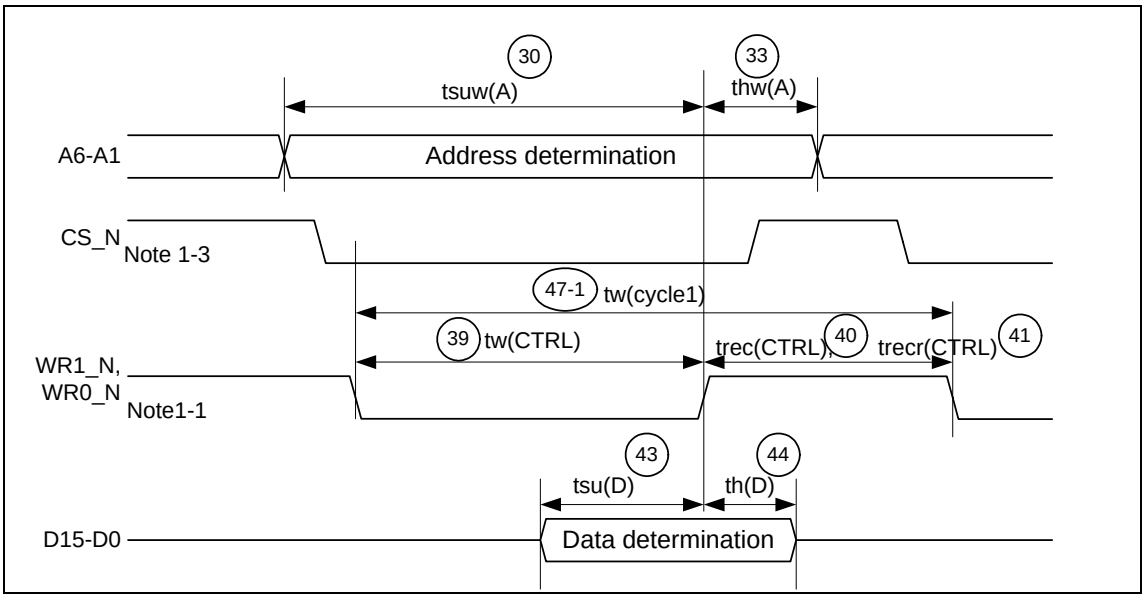

4.11.1.2 CPU access read timing (when a separate bus is set)

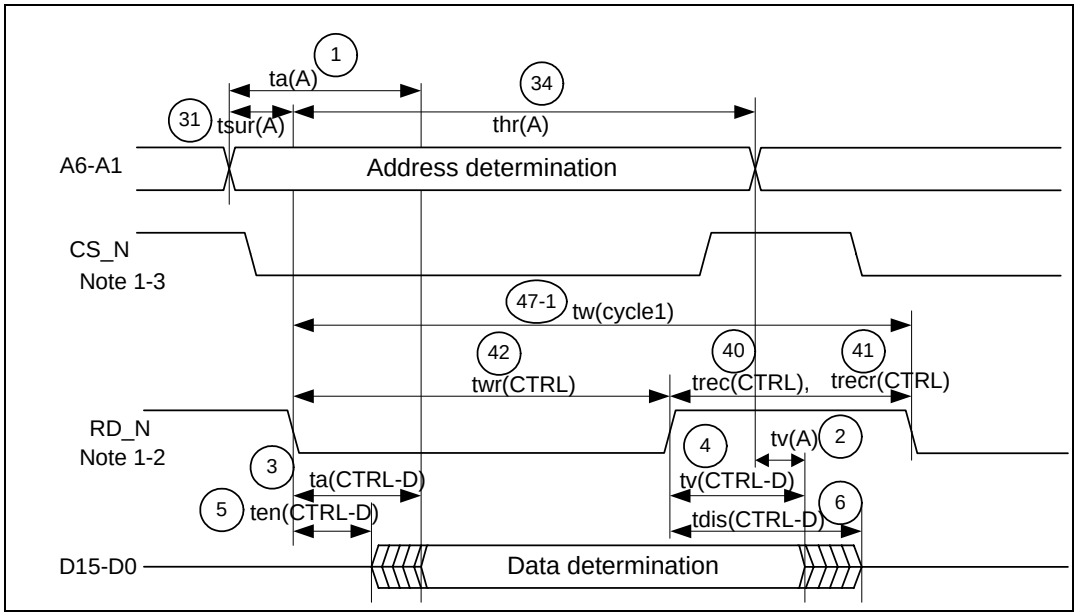

Note 1-1: The control signal when writing data is a combination of CS_N, WR1_N, and WR0_N.
Note 1-2: The control signal, when reading data, is a combination of CS_N and RD_N.
Note 1-3: RD_N, WR0_N, and WR1_N should not be timed to fall when CS_N is rising. Similarly, CS_N should not be timed to fall when RD_N or WR0_N, and WR1_N are rising. In the above instances, an interval of at least 10ns must be left open.

Downloaded from Elcodis.com electronic components distributor

4.11.2 CPU access timing (when a multiplex bus is set)

4.11.2.1 CPU access write timing (when a multiplex bus is set)

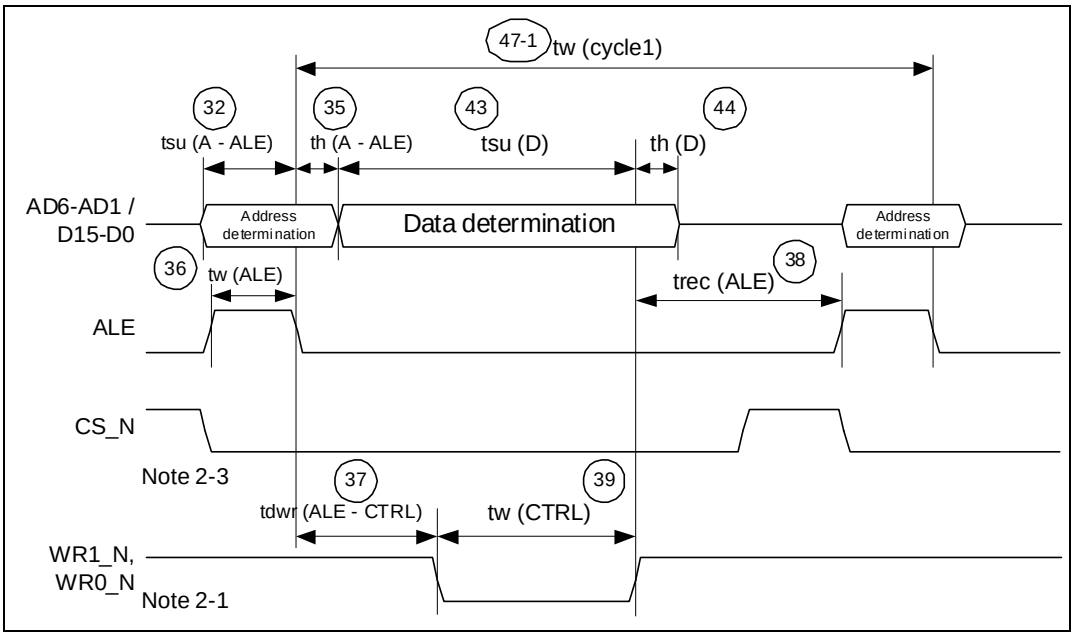

4.11.2.2 CPU access read timing (when a multiplex bus is set)

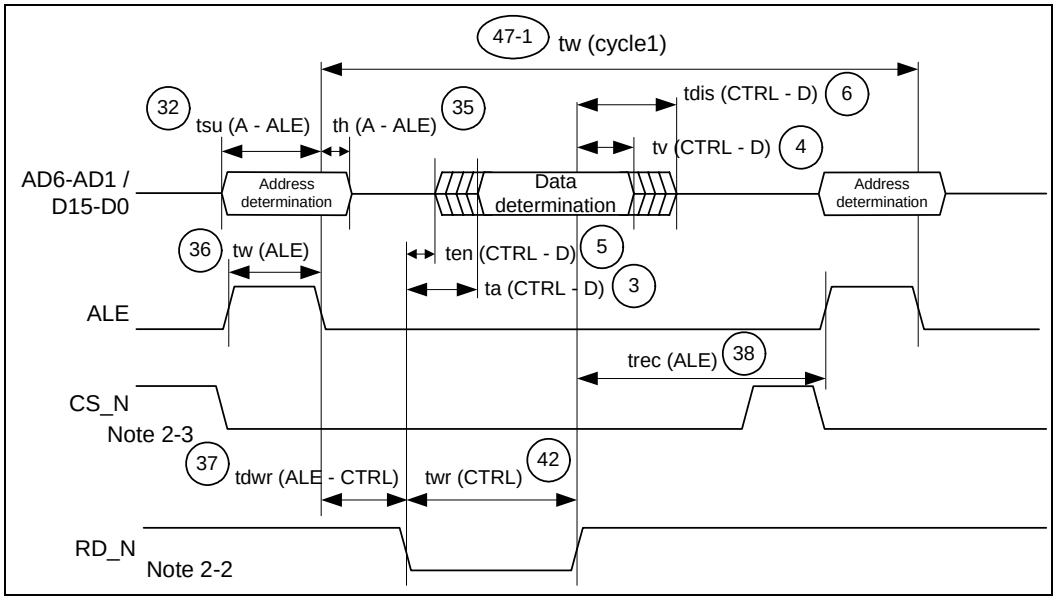

Note 2-1: The control signal when writing data is a combination of CS_N, WR1_N, and WR0_N.
Note 2-2: The control signal when reading data is a combination of CS_N and RD_N.
Note 2-3: RD_N, WR0_N, and WR1_N should not be timed to fall when CS_N is rising. Similarly, CS_N should not be timed to fall when RD_N or WR0_N, and WR1_N are rising. In the above instances, an interval of at least 10ns must be left open.

Downloaded from Elcodis.com electronic components distributor

4.11.3 DMA access timing (when a cycle steal transfer, separate bus are set)

4.11.3.1 DMA cycle steal transfer write timing (CPU bus address is not used: DFORM=010)

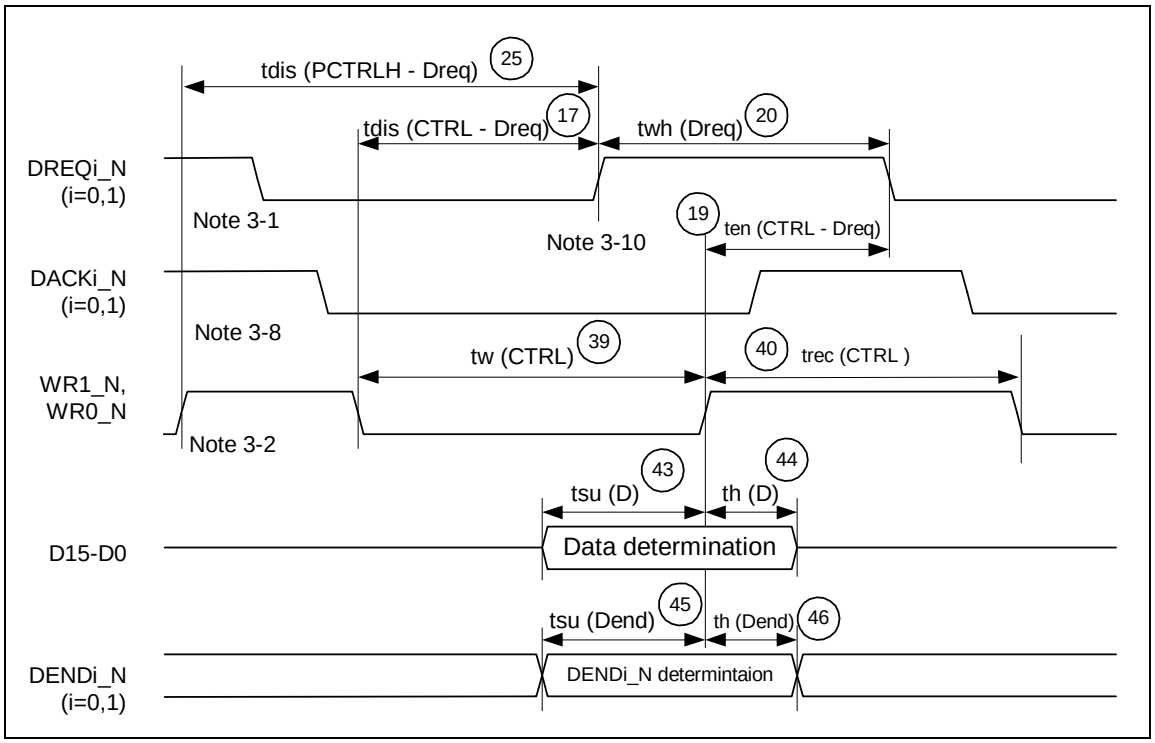

4.11.3.2 DMACycle steal transfer read timing (CPU bus address not used: DFORM=010)

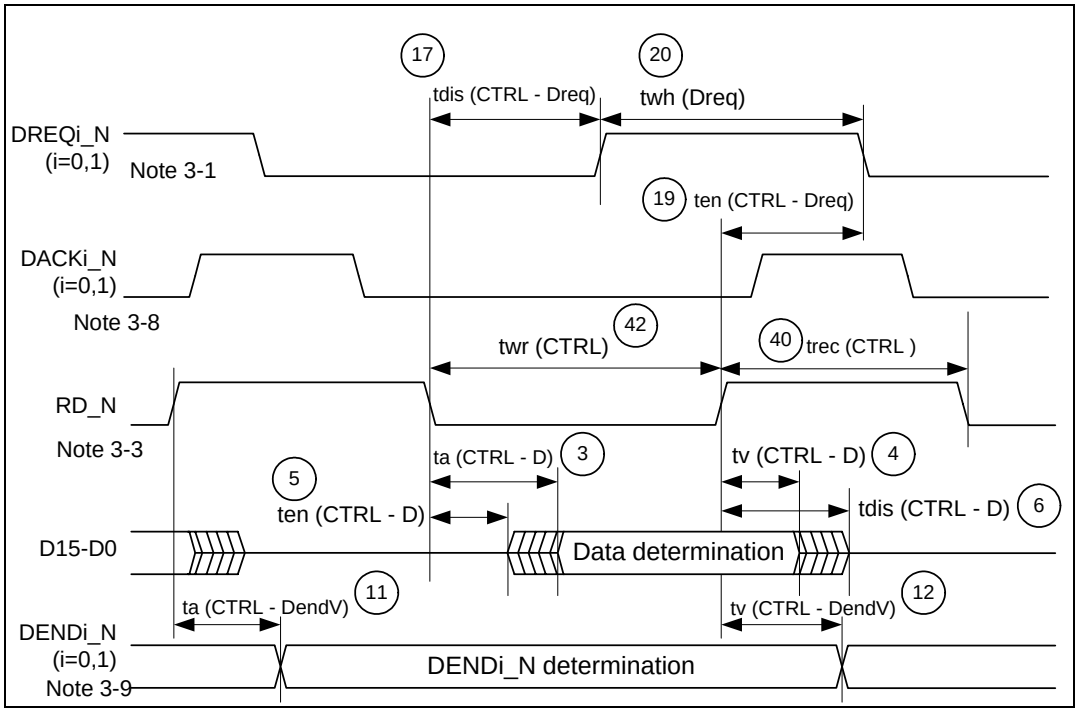

Downloaded from Elcodis.com electronic components distributor

4.11.3.3 DMA Cycle steal transfer Write timing (CPU Separate bus setting:DFORM=000)

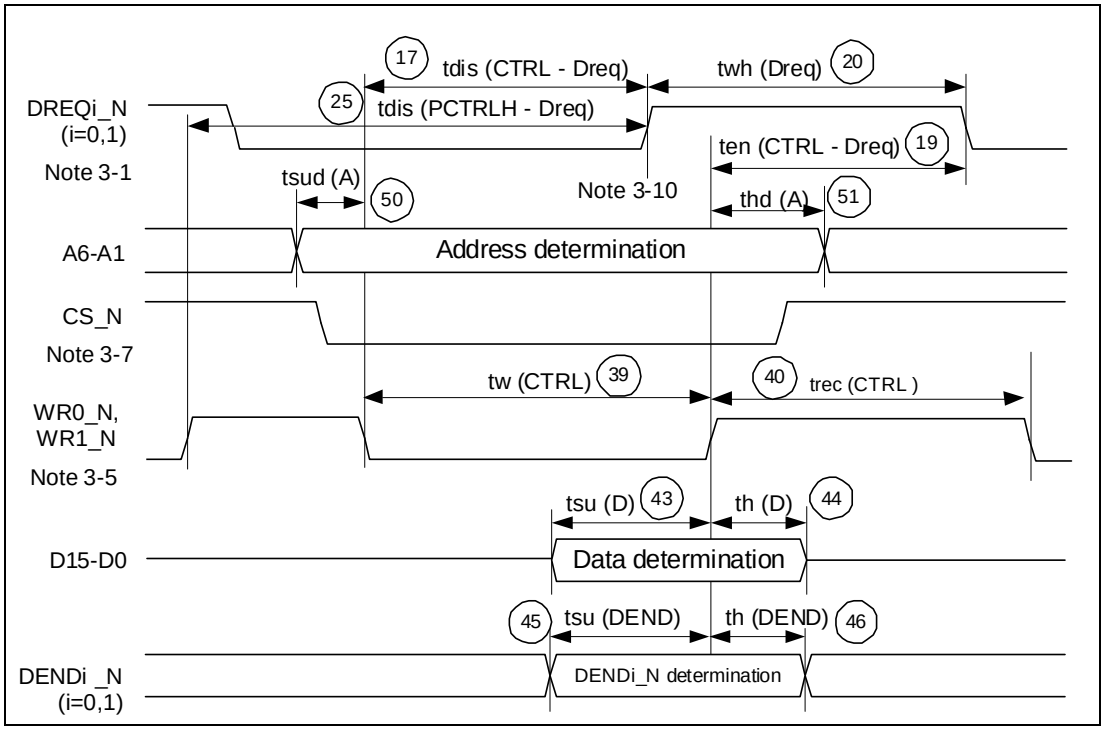

4.11.3.4 DMA Cycle steal transfer read timing (CPU separate bus setting: DFORM=000)

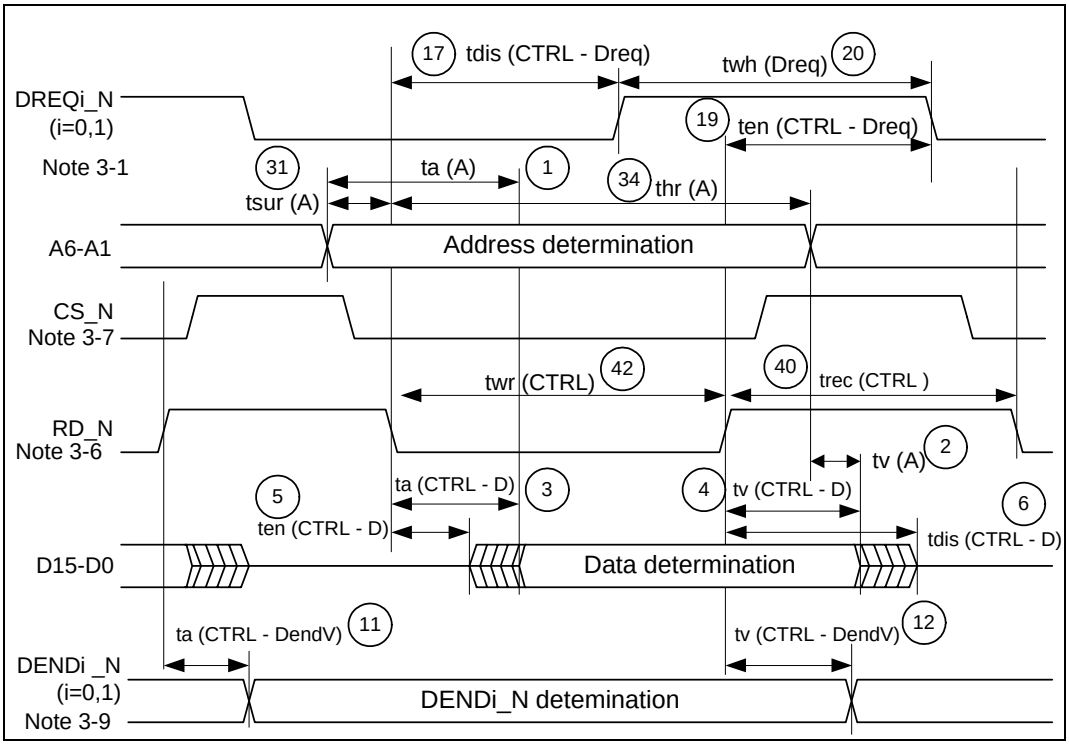

Downloaded from Elcodis.com electronic components distributor

4.11.3.5 DMA Cycle steal transfer write timing (SPLIT bus: DFORM=100, OBUS=1/0)

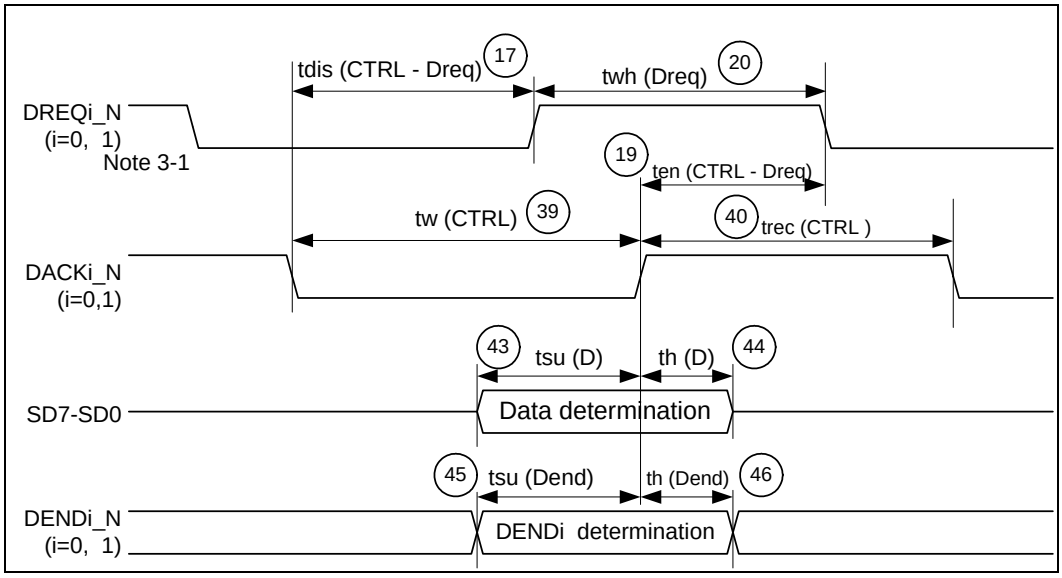

4.11.3.6 DMA Cycle steal transfer read timing (SPLIT bus: DFORM=100, OBUS=1)

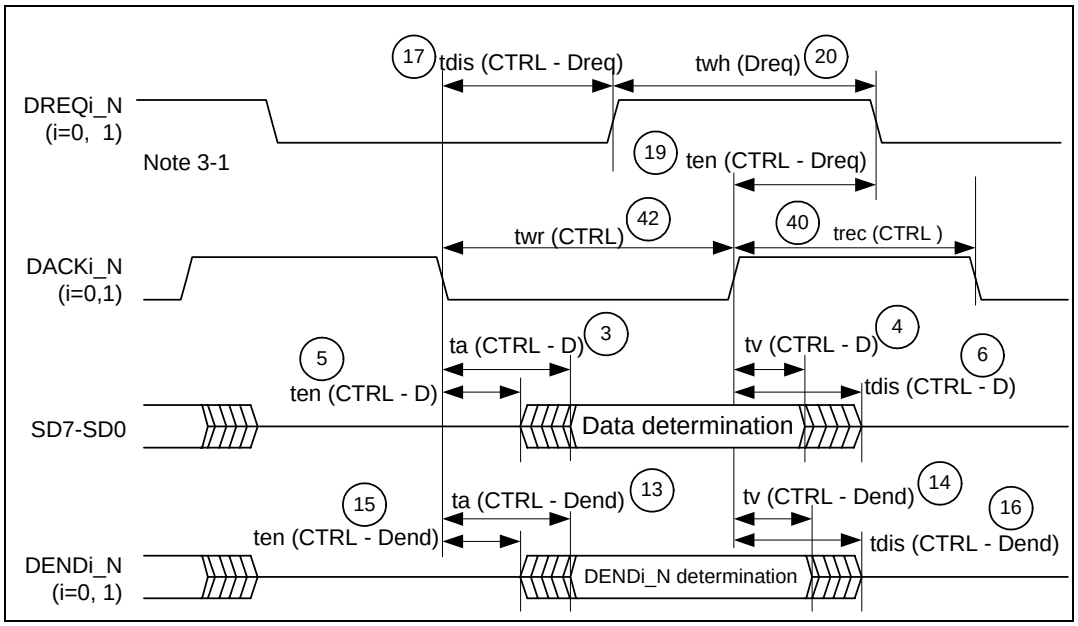

Downloaded from Elcodis.com electronic components distributor

4.11.3.7 DMA Cycle steal transfer read timing (SPLIT bus: DFORM=100, OBUS=0)

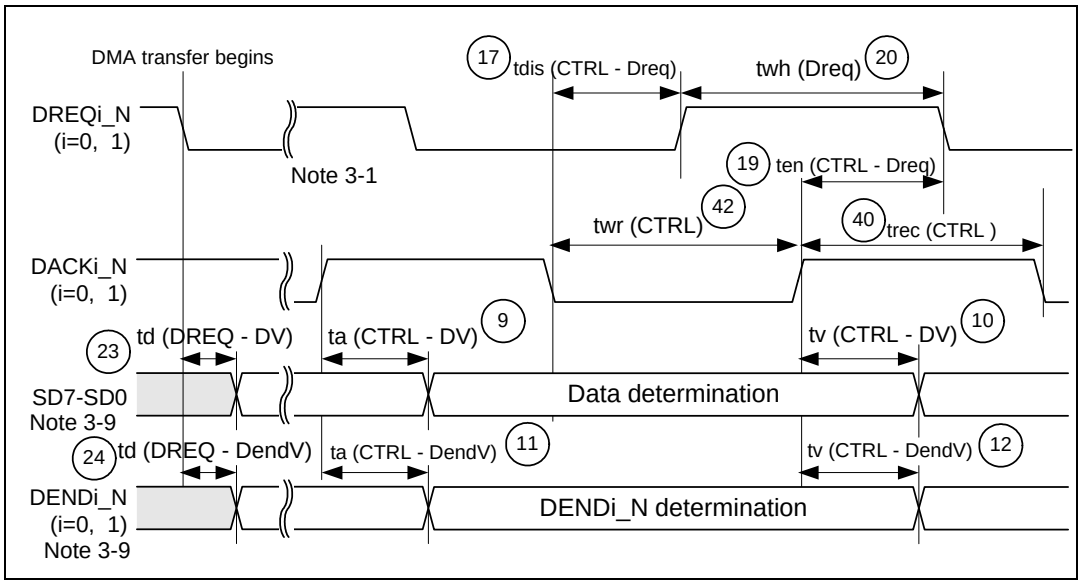

4.11.3.8 DMA Cycle steal transfer write timing (CPU BUS address not used: DFORM=011)

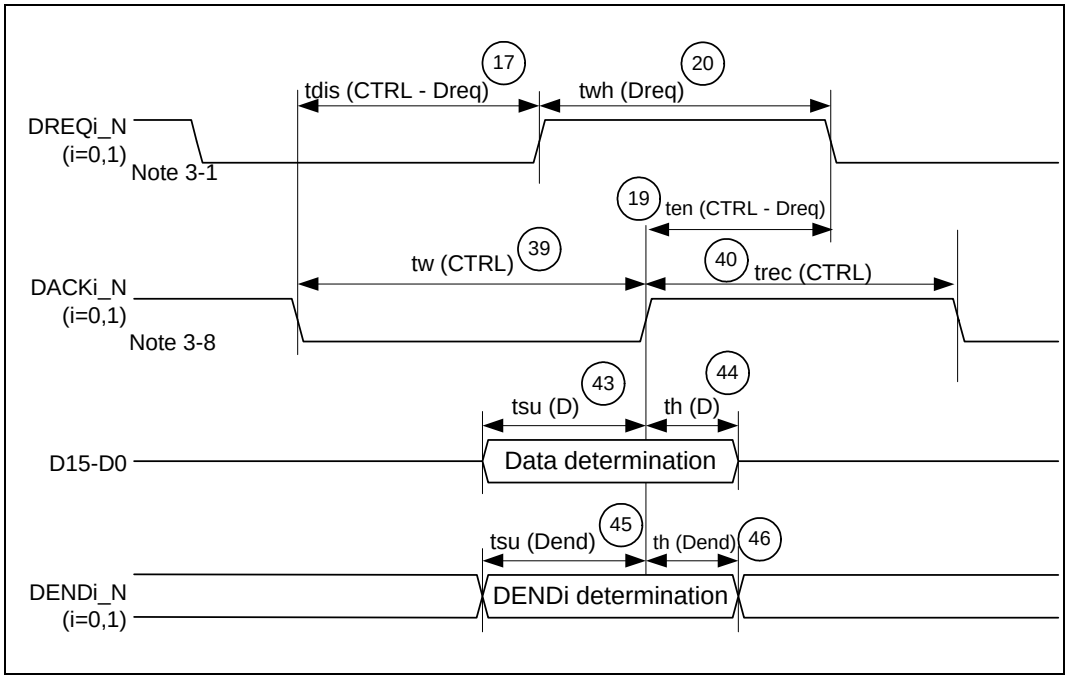

Downloaded from Elcodis.com electronic components distributor

4.11.3.9 DMA Cycle steal transfer read timing (CPU BUS address not used: DFORM=011)

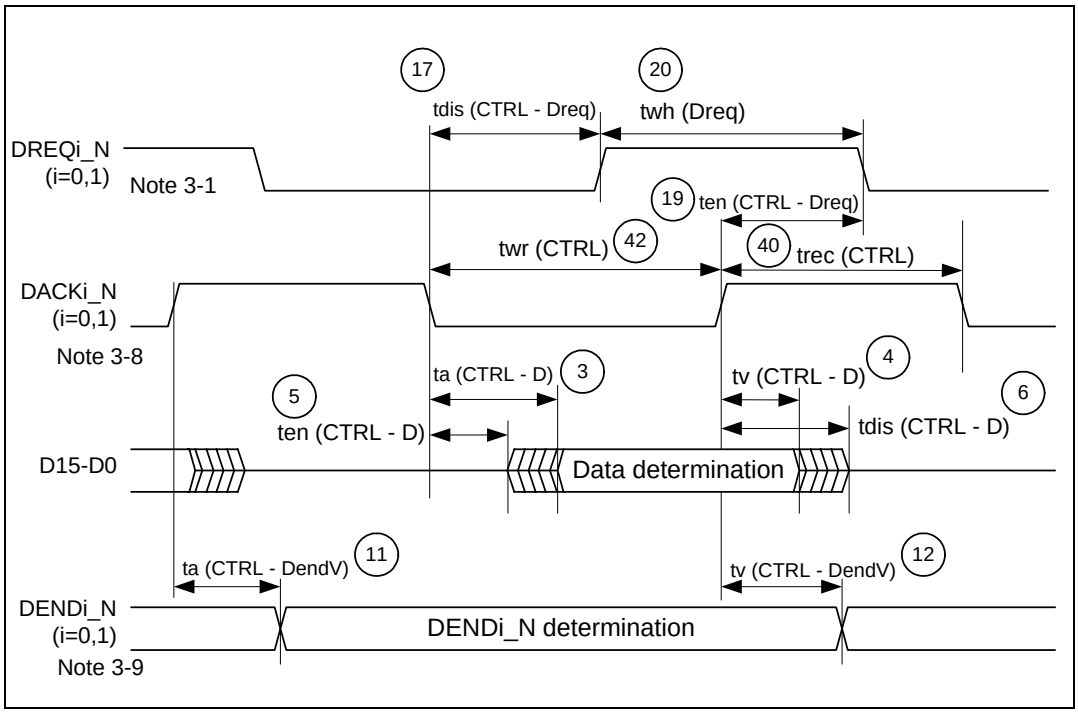

Note 3-1: The control signal is the inactive condition for DREQi_N (i=0, 1). When the next DMA transfer exists, the delay ratings for twh (Dreq) and ten (CTRL-Dreq) will be valid until DREQi_N becomes active is twh (Dreq).
Note 3-2: The control signal when writing data is a combination of DACKi_N, WR1_N, and WR0_N.
Note 3-3: The control signal when reading data is a combination of DACKi_N and RD_N.
Note 3-4: The control signal when writing data is a combination of DACK0 and DSTRB0_N.
Note 3-5: The control signal when writing data is a combination of CS_N, WR0_N and WR1_N.
Note 3-6: The control signal when reading data is a combination of CS_N and RD_N.
Note 3-7: RD_N, WR0_N and WR1_N should not be timed to fall when CS_N is rising. Similarly, CS_N should not be timed to fall when RD_N or WR0_N and WR1_N are rising. In the instances noted above, an interval of at least 10ns must be left open.
Note 3-8: RD_N, WR0_N and WR1_N should not be timed to fall when DACKi_N is rising (or falling). Similarly, DACK should not be timed to fall (or rise) when RD_N or WR0_N and WR1_N are rising. In the instances noted above, an interval of at least 10ns must be left open.
Note 3-9: When the receipt data is one byte, the data determined time is "(23)td(DREQ-DV)" and the DEND determined time is "(24)td(DREQ-DendV)".
Note 3-10: The time required ultil DREQi_N (i=0,1) becomes active is valid, when the next DMA transfer exists, and when tdis (CTRL-Dreq) or tdis (PCTRLH - Dreq) has slow ratings.

Downloaded from Elcodis.com electronic components distributor

4.11.4 DMA access timing (Cycle steal transfer, when a multiplex bus is set)

4.11.4.1 DMA cycle steal transfer write timing (CPU multiplex bus settings: DFORM=000)

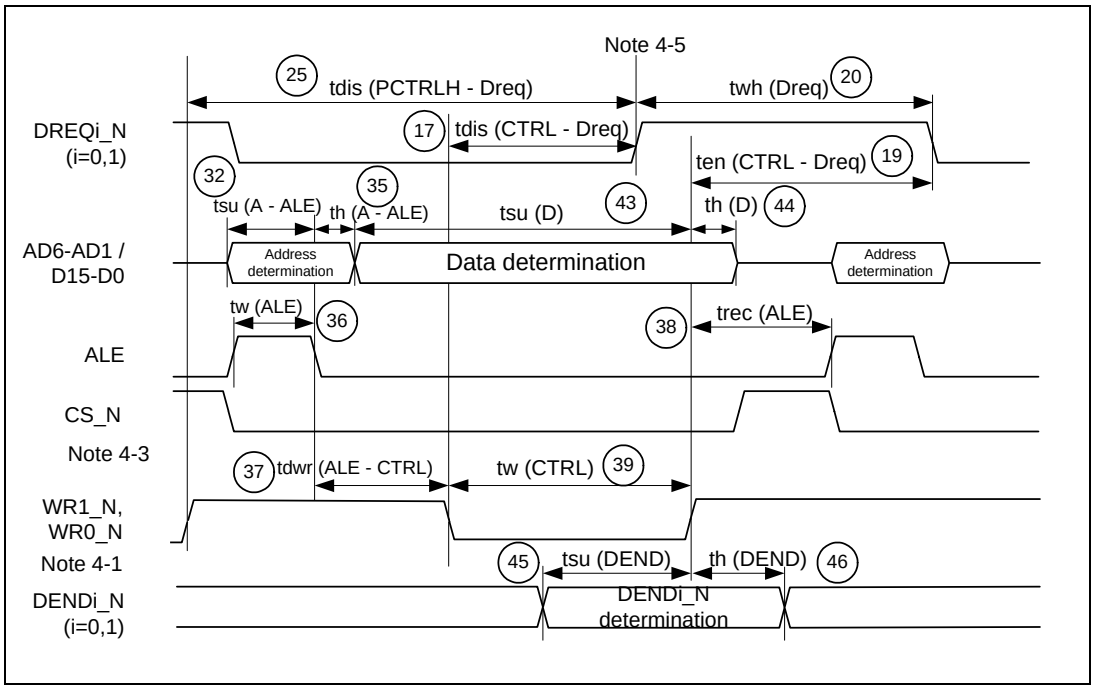

4.11.4.2 DMA Cycle steal transfer read timing (CPU Multiplex bus setting:DFORM=000)

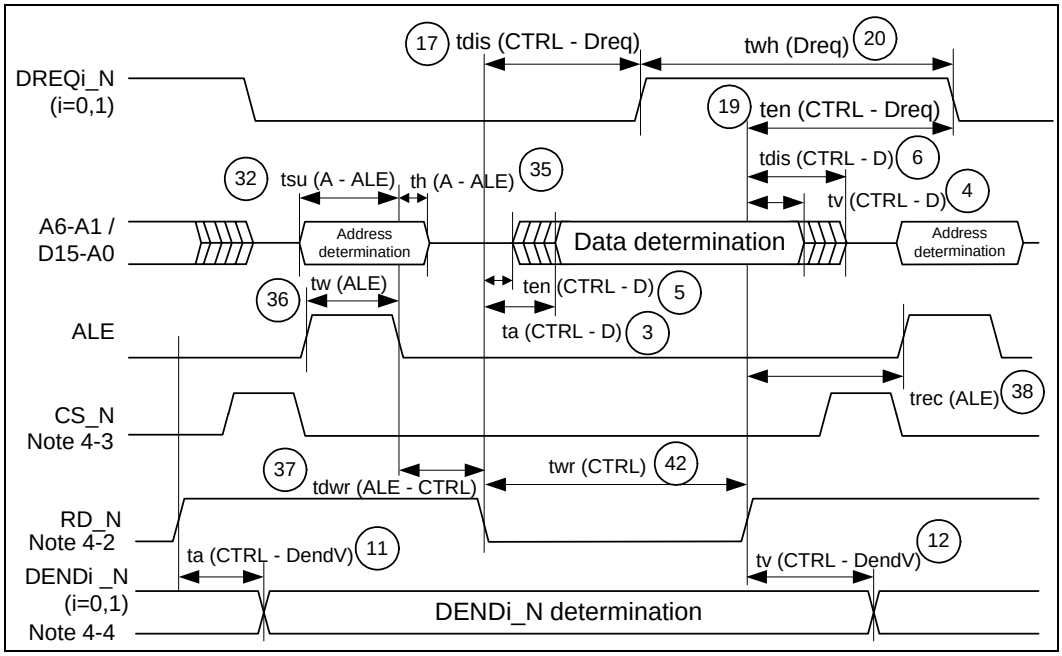

Note 4-1: The control signal when writing data is a combination of CS_N, WR0_N, and WR1_N.
Note 4-2: The control signal when reading data is a combination of CS_N and RD_N.
Note 4-3: RD_N, WR0_N and WR1_N should not be timed to fall when CS_N is rising. Similarly, CS_N should not be timed to fall when RD_N or WR0_N and WR1_N are rising. In the instances noted above, an interval of at least 10ns must be left open.
Note 4-4 : When the receipt data is one byte, the DEND determined time is "(24)td(DREQ-DendV)".
Note 4-5: The time required until DREQi_N (i=0,1) becomes active is valid, when the next DMA transfer exists, and when tdis (CTRL-Dreq) or tdis (PCTRLH - Dreq) has slow ratings.

Downloaded from Elcodis.com electronic components distributor

4.11.5 DMA access timing (burst transfer and separate bus are set)

4.11.5.1 DMA burst transfer write timing (CPU BUS address not used: DFORM=010)

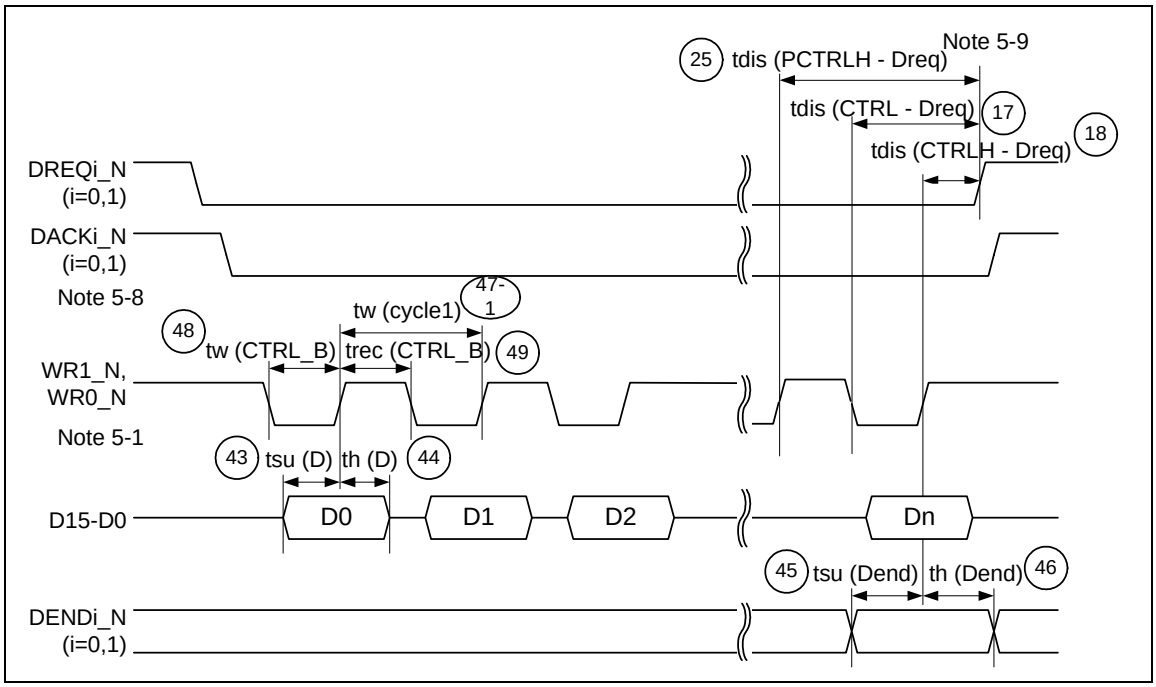

4.11.5.2 DMA burst transfer read timing (CPU BUS address not used: DFORM=010)

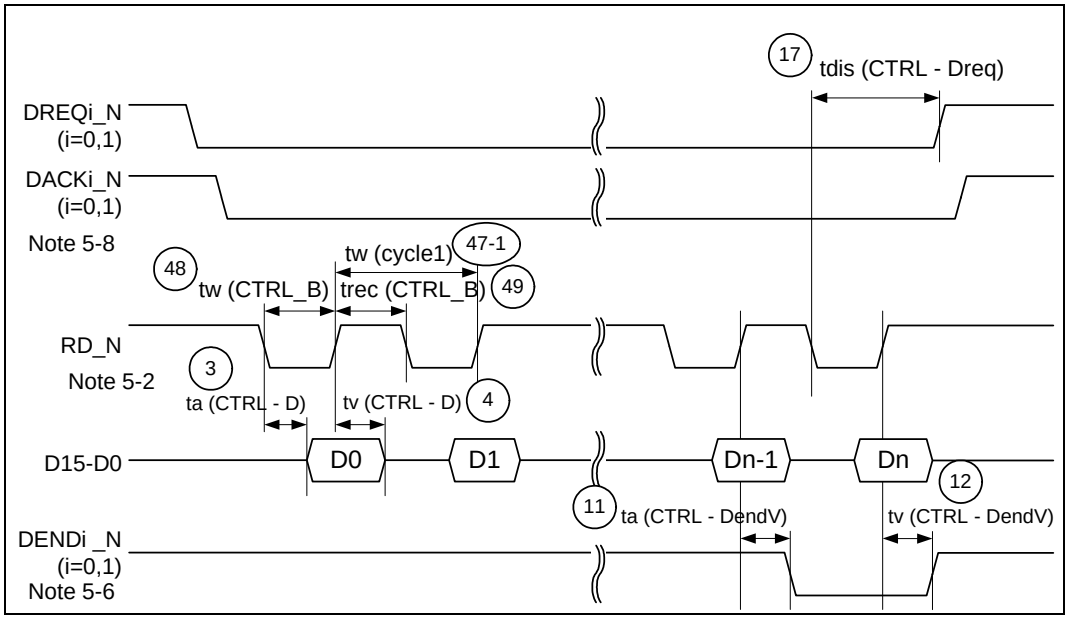

Downloaded from Elcodis.com electronic components distributor

4.11.5.3 DMA Burst transfer write timing (Separate bus setting:DFORM=000)

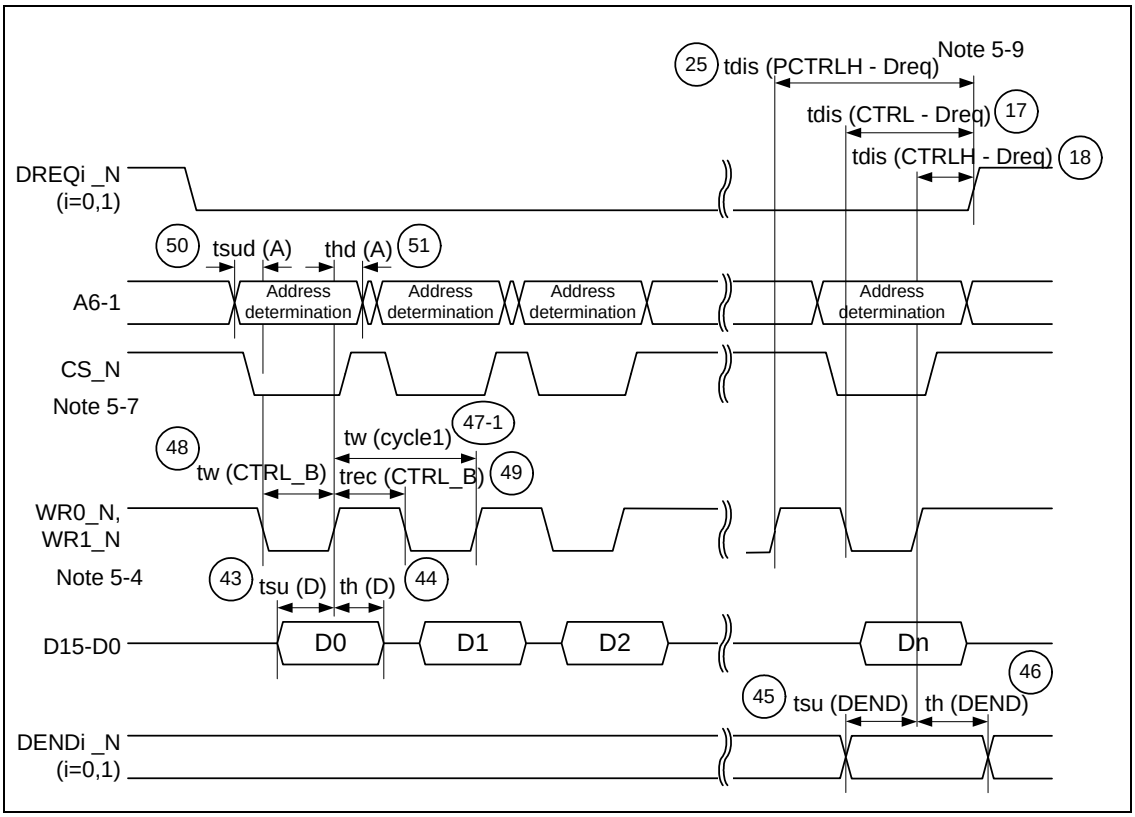

4.11.5.4 DMA burst transfer read timing (separate bus setting: DFORM=000)

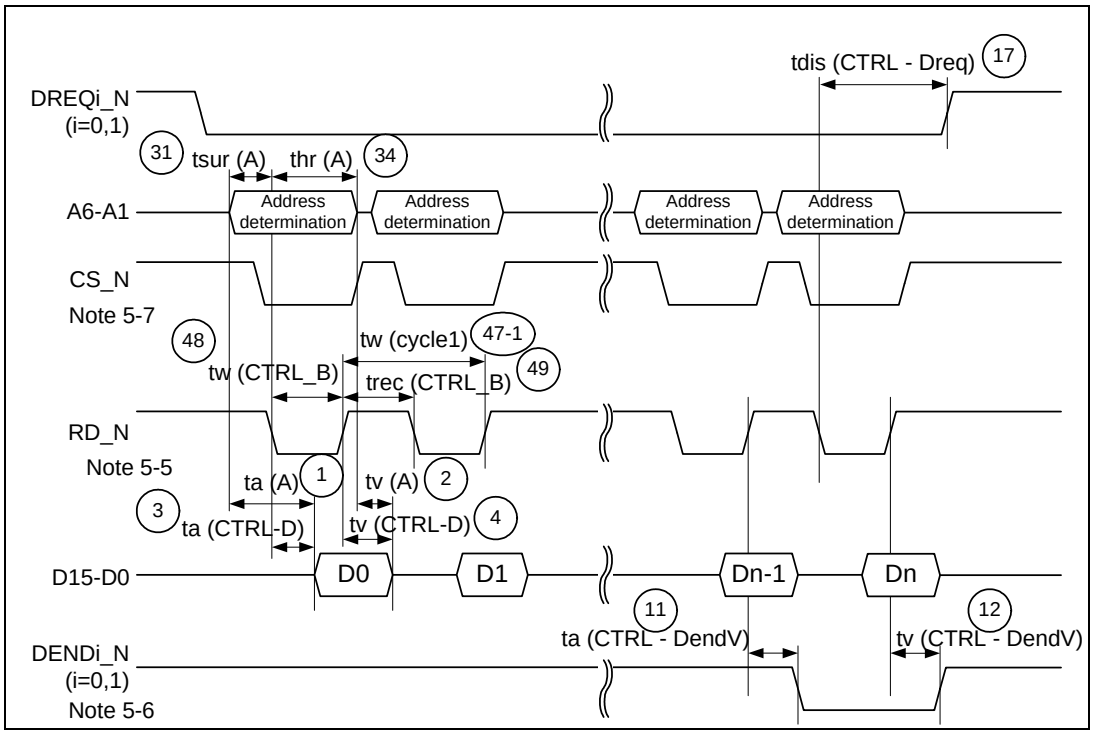

Downloaded from Elcodis.com electronic components distributor

4.11.5.5 DMA burst transfer write timing (SPLIT bus: DFORM=100, OBUS=1/0)

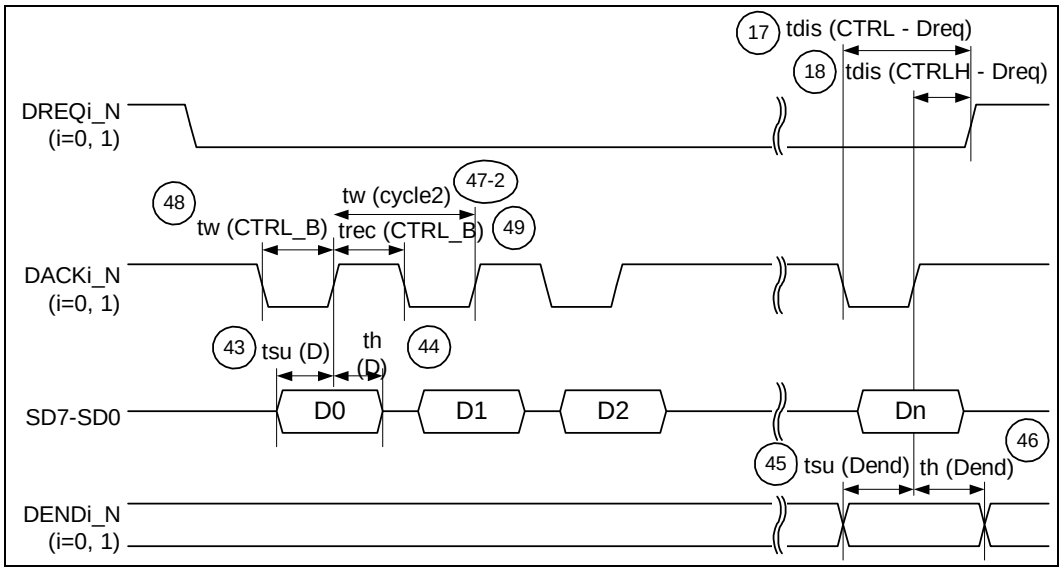

4.11.5.6 DMABurst transfer read timing (SPLIT bus:DFORM=100, OBUS=1)

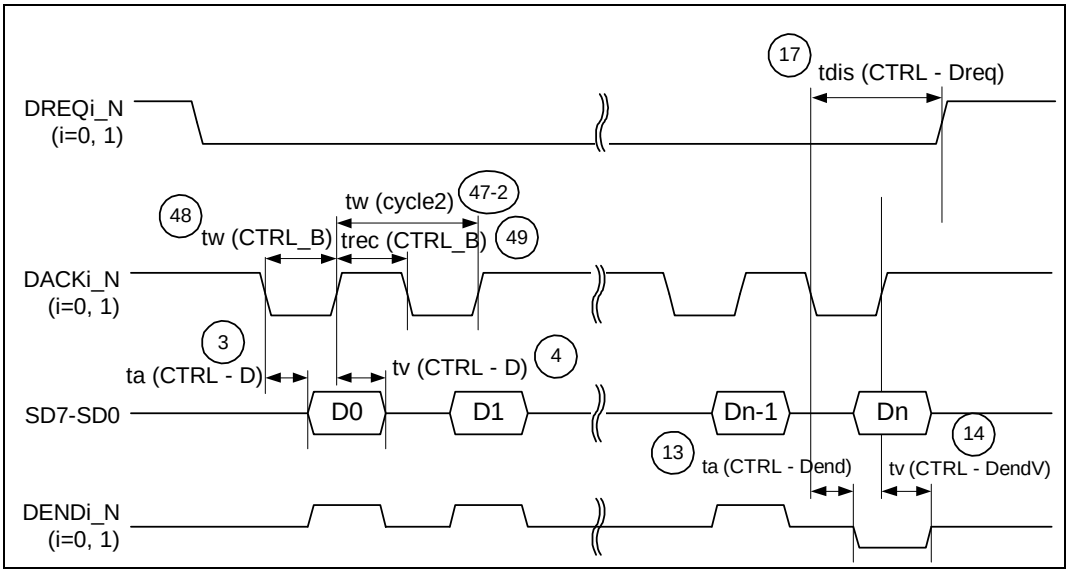

Downloaded from Elcodis.com electronic components distributor

4.11.5.7 DMA burst transfer read timing (SPLIT bus: DFORM=100, OBUS=0)

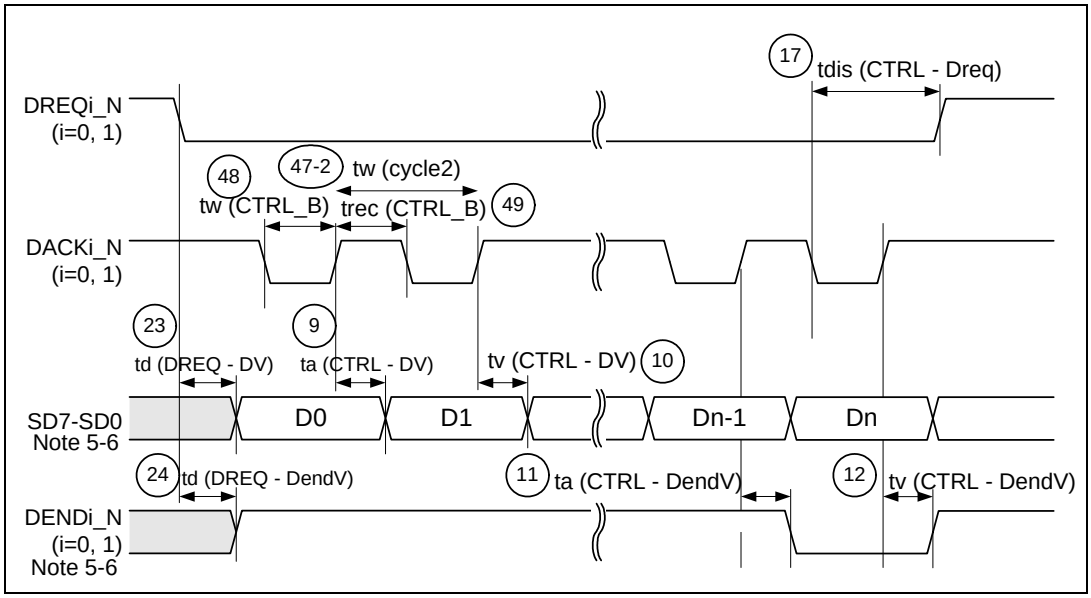

Downloaded from Elcodis.com electronic components distributor

4.11.5.8 DMA burst transfer write timing (CPU BUS address not used: DFORM=011)

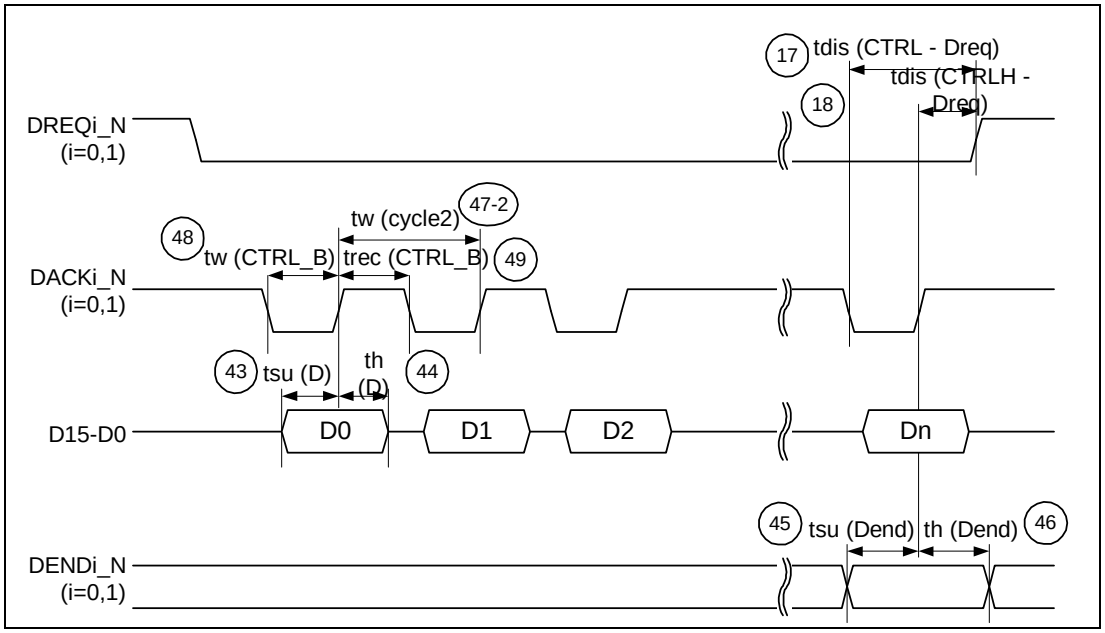

4.11.5.9 DMA burst transfer read timing (CPU BUS address not used: DFORM=011)

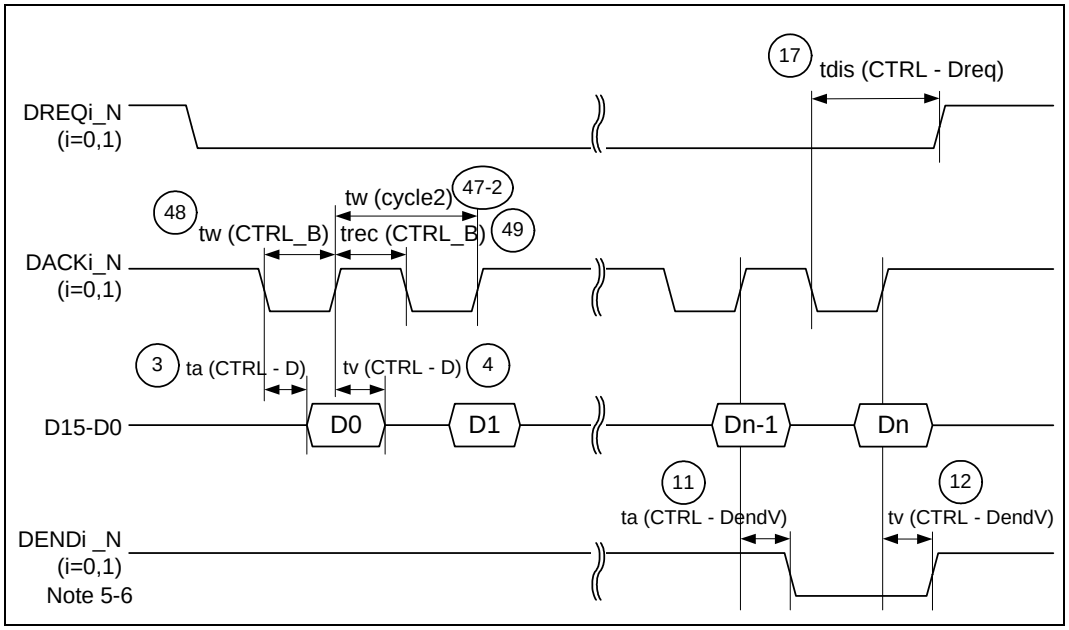

Note 5-1 : The control signal when writing data is a combination of DACKi_N(i=0, 1), WR0_N and WR1_N.
Note 5-2 : The control signal when reading data is a combination of DACKi_N and RD_N.
Note 5-3 : The control signal when writing data is a combination of DACK0 and DSTRB0_N.
Note 5-4 : The control signal when writing data is a combination of CS_N, WR0_N and WR1_N.
Note 5-5 : The control signal when reading data is a combination of CS_N and RD_N.
Note 5-6 : When the receipt data is one byte, the data determined time is "(23)td(DREQ-DV)" and the DEND determined time is "(24)td(DREQ-DendV)".
Note 5-7: RD_N, WR0_N and WR1_N should not be timed to fall when CS_N is rising. Similarly, CS_N should not be timed to fall when RD_N, WR0_N and WR1_N are rising. In the instances noted above, an interval of at least 10ns must be left open.
Note 5-8: RD_N, WR0_N and WR1_N should not be timed to fall when DACKi_N is rising (or falling). Similarly, DACKi_N should not be timed to fall (or rise) when RD_N, WR0_N and WR1_N are rising. In the instances noted above, an interval of at least 10ns must be left open.
Note 5-9:The time required until DREQi_N (i=0,1) becomes active is valid, when the next DMA transfer exists, and when tdis (CTRL-Dreq) or tdis (PCTRLH - Dreq) has slow ratings.

Downloaded from Elcodis.com electronic components distributor

4.11.6 DMA access timing (burst transfer, when a multiplex bus is set)

4.11.6.1 DMA burst transfer write timing (CPU multiplex bus setting: DFORM=000)

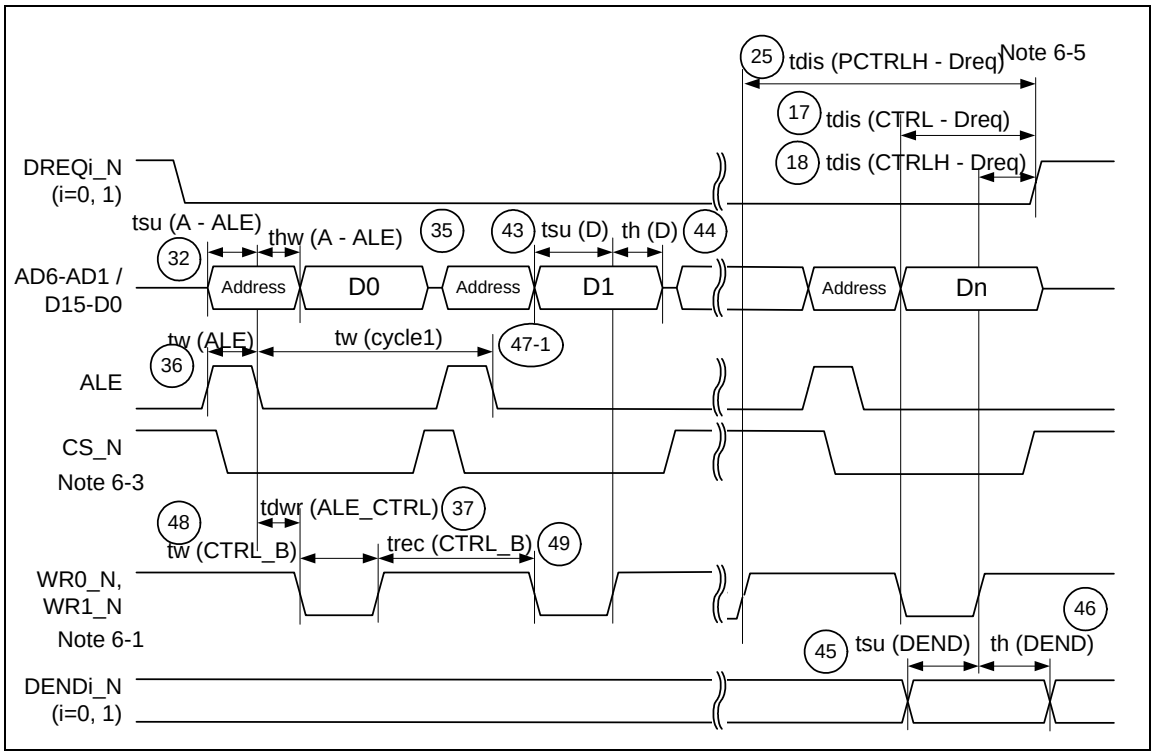

4.11.6.2 DMA burst transfer read timing (CPU multiplex bus setting: DFORM=000)

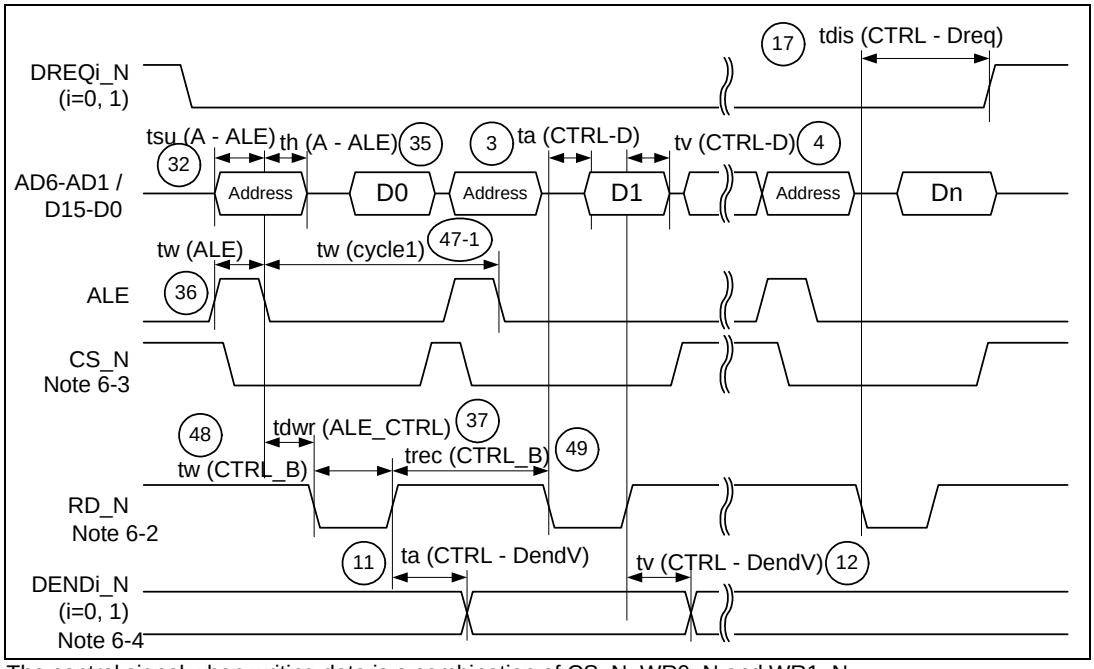

Note 6-1: The control signal when writing data is a combination of CS_N, WR0_N and WR1_N.
Note 6-2: The control signal when reading data is a combination of CS_N and RD_N.
Note 6-3: RD_N, WR0_N and WR1_N should not be timed to fall when CS_N is rising. Similarly, CS_N should not be timed to fall when RD_N or WR0_N and WR1_N are rising. In the instances noted above, an interval of at least 10ns must be left open.
Note 6-4 : When the receipt data is one byte, the DEND determined time is "(24)td(DREQ-DendV)".
Note 6-5:The time required until DREQi_N (i=0,1) becomes active is valid, when the next DMA transfer exists, and when tdis (CTRL-Dreq) or tdis (PCTRLH - Dreq) has slow ratings.

Downloaded from Elcodis.com electronic components distributor

4.12 Interrupt Timing

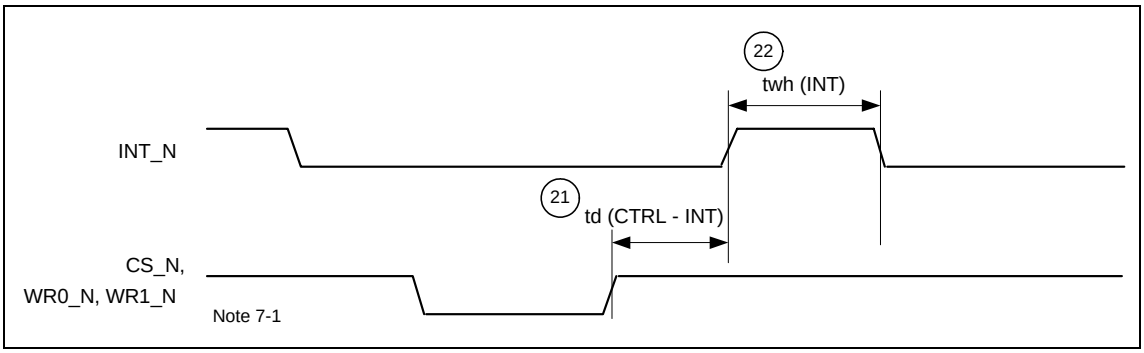

Note7-1: Writing using the combination of CS_N, WR0_N and WR1_N takes place during the active ("L") overlap period. The ratings from the rising edge are valid starting from the earliest change in the inactive signal.

Downloaded from Elcodis.com electronic components distributor

Revision history	R8A66597 Data Sheet

Rev.	Date	Description	
		Page	Summary
1.00	May 30, 2008		Rev.1.00 issued
1.01	Oct.17.2008	7	Correct: VDD description of functions
		41	Correct:CFIFOSEL/REW bit H/W “R” →“R/W(0)”
		42	Add:2.8.4 “When the software writes "1" to this bit, the controller again writes "0" to this bit.”
		44	Correct:DxFIFOSEL/REW bit H/W “R” →“R/W(0)”
		45	Correct:C/DxFIFOCTR/BCLR bit H/W “R” →“R/W(0)”
		159	Add:Chapter 4.3, ICC(A),ICC(S)
		160	Add:Chapter 4.4, ICC(A),ICC(S)
		164	Correct:Chapter 4.7 Reset Timming → Chapter 4.7 Power Sequence, Reset Timming Update:4.7.1 Power Sequence, update Note

Downloaded from Elcodis.com electronic components distributor

Renesas Technology Corp. Sales Strategic Planning Div. Nippon Bldg., 2-6-2, Ohte-machi, Chiyoda-ku, Tokyo 100-0004, Japan

Notes:
1. This document is provided for reference purposes only so that Renesas customers may select the appropriate Renesas products for their use. Renesas neither makes warranties or representations with respect to the accuracy or completeness of the information contained in this document nor grants any license to any intellectual property rights or any other rights of Renesas or any third party with respect to the information in this document.
2. Renesas shall have no liability for damages or infringement of any intellectual property or other rights arising out of the use of any information in this document, including, but not limited to, product data, diagrams, charts, programs, algorithms, and application circuit examples.
3. You should not use the products or the technology described in this document for the purpose of military applications such as the development of weapons of mass destruction or for the purpose of any other military use. When exporting the products or technology described herein, you should follow the applicable export control laws and regulations, and procedures required by such laws and regulations.
4. All information included in this document such as product data, diagrams, charts, programs, algorithms, and application circuit examples, is current as of the date this document is issued. Such information, however, is subject to change without any prior notice. Before purchasing or using any Renesas products listed in this document, please confirm the latest product information with a Renesas sales office. Also, please pay regular and careful attention to additional and different information to be disclosed by Renesas such as that disclosed through our website. (http://www.renesas.com)
5. Renesas has used reasonable care in compiling the information included in this document, but Renesas assumes no liability whatsoever for any damages incurred as a result of errors or omissions in the information included in this document.
6. When using or otherwise relying on the information in this document, you should evaluate the information in light of the total system before deciding about the applicability of such information to the intended application. Renesas makes no representations, warranties or guaranties regarding the suitability of its products for any particular application and specifically disclaims any liability arising out of the application and use of the information in this document or Renesas products.
7. With the exception of products specified by Renesas as suitable for automobile applications, Renesas products are not designed, manufactured or tested for applications or otherwise in systems the failure or malfunction of which may cause a direct threat to human life or create a risk of human injury or which require especially high quality and reliability such as safety systems, or equipment or systems for transportation and traffic, healthcare, combustion control, aerospace and aeronautics, nuclear power, or undersea communication transmission. If you are considering the use of our products for such purposes, please contact a Renesas sales office beforehand. Renesas shall have no liability for damages arising out of the uses set forth above.
8. Notwithstanding the preceding paragraph, you should not use Renesas products for the purposes listed below:
   (1) artificial life support devices or systems
   (2) surgical implantations
   (3) healthcare intervention (e.g., excision, administration of medication, etc.)
   (4) any other purposes that pose a direct threat to human life
   Renesas shall have no liability for damages arising out of the uses set forth in the above and purchasers who elect to use Renesas products in any of the foregoing applications shall indemnify and hold harmless Renesas Technology Corp., its affiliated companies and their officers, directors, and employees against any and all damages arising out of such applications.
9. You should use the products described herein within the range specified by Renesas, especially with respect to the maximum rating, operating supply voltage range, movement power voltage range, heat radiation characteristics, installation and other product characteristics. Renesas shall have no liability for malfunctions or damages arising out of the use of Renesas products beyond such specified ranges.
10. Although Renesas endeavors to improve the quality and reliability of its products, IC products have specific characteristics such as the occurrence of failure at a certain rate and malfunctions under certain use conditions. Please be sure to implement safety measures to guard against the possibility of physical injury, and injury or damage caused by fire in the event of the failure of a Renesas product, such as safety design for hardware and software including but not limited to redundancy, fire control and malfunction prevention, appropriate treatment for aging degradation or any other applicable measures. Among others, since the evaluation of microcomputer software alone is very difficult, please evaluate the safety of the final products or system manufactured by you.
11. In case Renesas products listed in this document are detached from the products to which the Renesas products are attached or affixed, the risk of accident such as swallowing by infants and small children is very high. You should implement safety measures so that Renesas products may not be easily detached from your products. Renesas shall have no liability for damages arising out of such detachment.
12. This document may not be reproduced or duplicated, in any form, in whole or in part, without prior written approval from Renesas.
13. Please contact a Renesas sales office if you have any questions regarding the information contained in this document, Renesas semiconductor products, or if you have any other inquiries.

RENESAS SALES OFFICES

http://www.renesas.com

Refer to "**http://www.renesas.com/en/network**" for the latest and detailed information.

Renesas Technology America, Inc.
450 Holger Way, San Jose, CA 95134-1368, U.S.A
Tel: <1> (408) 382-7500, Fax: <1> (408) 382-7501

Renesas Technology Europe Limited
Dukes Meadow, Millboard Road, Bourne End, Buckinghamshire, SL8 5FH, U.K.
Tel: <44> (1628) 585-100, Fax: <44> (1628) 585-900

Renesas Technology (Shanghai) Co., Ltd.
Unit 204, 205, AZIACenter, No.1233 Lujiazui Ring Rd, Pudong District, Shanghai, China 200120
Tel: <86> (21) 5877-1818, Fax: <86> (21) 6887-7858/7898

Renesas Technology Hong Kong Ltd.
7th Floor, North Tower, World Finance Centre, Harbour City, Canton Road, Tsimshatsui, Kowloon, Hong Kong
Tel: <852> 2265-6688, Fax: <852> 2377-3473

Renesas Technology Taiwan Co., Ltd.
10th Floor, No.99, Fushing North Road, Taipei, Taiwan
Tel: <886> (2) 2715-2888, Fax: <886> (2) 3518-3399

Renesas Technology Singapore Pte. Ltd.
1 Harbour Front Avenue, #06-10, Keppel Bay Tower, Singapore 098632
Tel: <65> 6213-0200, Fax: <65> 6278-8001

Renesas Technology Korea Co., Ltd.
Kukje Center Bldg. 18th Fl., 191, 2-ka, Hangang-ro, Yongsan-ku, Seoul 140-702, Korea
Tel: <82> (2) 796-3115, Fax: <82> (2) 796-2145

Renesas Technology Malaysia Sdn. Bhd
Unit 906, Block B, Menara Amcorp, Amcorp Trade Centre, No.18, Jln Persiaran Barat, 46050 Petaling Jaya, Selangor Darul Ehsan, Malaysia
Tel: <603> 7955-9390, Fax: <603> 7955-9510

© 2008. Renesas Technology Corp., All rights reserved. Printed in Japan.

Colophon .7.2

Downloaded from Elcodis.com electronic components distributor