W66910

TE Mode ISDN S/T-Controller with Microprocessor Interface

Data Sheet

Downloaded from Elcodis.com electronic components distributor

The information described in this document is the exclusive intellectual property of Winbond Electronics Corp and shall not be reproduced without permission from Winbond.

Winbond is providing this document only for reference purposes for W66910-based system design. Winbond assumes no responsibility for errors or omissions. All data and specifications are subject to change without notice.

Downloaded from Elcodis.com electronic components distributor

TABLE OF CONTENTS

1. GENERAL DESCRIPTION **8**

2. FEATURES **8**

3. PIN CONFIGURATION **9**

4. PIN DESCRIPTION **11**

5. SYSTEM DIAGRAM AND APPLICATIONS **13**

6. BLOCK DIAGRAM **14**

7. FUNCTIONAL DESCRIPTIONS **15**

7.1 MAIN BLOCK FUNCTIONS 15
7.2 LAYER 1 FUNCTIONS DESCRIPTIONS 16
7.2.1 S/T Interface Transmitter/Receiver *16*
7.2.2 Receiver Clock Recovery And Timing Generation *20*
7.2.3 Layer 1 Activation/Deactivation *20*
7.2.3.1 States Descriptions And Command/Indication Codes 20
7.2.3.2 State Transition Diagrams 22
7.2.4 D Channel Access Control *26*
7.2.5 Frame Alignment *26*
7.2.5.1 FAinfA_1fr 27
7.2.5.2 FAinfB_1fr 27
7.2.5.3 FAinfD_1fr 27
7.2.5.4 FAinfA_kfr 27
7.2.5.5 FAinfB_kfr 27
7.2.5.6 FAinfD_kfr 28
7.2.5.7 Faregain 28
7.2.6 Multiframe Synchronization *28*
7.2.7 Test Functions *29*
7.3 SERIAL INTERFACE BUS 31
7.4 B CHANNEL SWITCHING 31
7.5 PCM PORT 33
7.6 D CHANNEL HDLC CONTROLLER 33
7.6.1 D Channel Message Transfer Modes *34*
7.6.2 Reception of Frames in D Channel *34*
7.6.3 Transmission of Frames in D Channel *35*
7.7 B CHANNEL HDLC CONTROLLER 36
7.7.1 Reception of Frames in B Channel *36*
7.7.2 Transmission of Frames in B Channel *37*
7.8 GCI MODE SERIAL INTERFACE BUS 38
7.8.1 GCI Mode C/I0 Channel Handling *39*
7.8.2 GCI Mode Monitor Channel Handling *39*
7.9 8-BIT MICROPROSESSOR INTERFACE CIRCUIT 40
7.10 PERIPHERAL CONTROL 40

8. REGISTER DESCRIPTIONS **42**

Downloaded from Elcodis.com electronic components distributor

8.1 CHIP CONTROL AND D_CH HDLC CONTROLLER 42
8.1.1 D_ch receive FIFO D_RFIFO Read Address 00H 44
8.1.2 D_ch transmit FIFO D_XFIFO Write Address 01H 44
8.1.3 D_ch command register D_CMDR WriteAddress 02H 45
8.1.4 D_ch Mode Register D_MODE Read/Write Address 03H 45
8.1.5 Timer 1 Register TIMR1Read/Write Address 04H 46
8.1.6 Interrupt Status Register ISTARead_clearAddress 05H 47
8.1.7 Interrupt Mask Register IMASK Read/Write Address 06H 48
8.1.8 D_ch Extended Interrupt Register D_EXIR Read_clear Address 07H 48
8.1.9 D_ch Extended Interrupt Mask Register D_EXIM Read/Write Address 08H 49
8.1.10 D_ch Transmit Status Register D_XSTA ReadAddress 09H 49
8.1.11 D_ch Receive Status Register D_RSTA ReadAddress 0AH 50
8.1.12D_ch SAPI Address Mask D_SAM Read/Write Address 0BH 50
8.1.13 D_ch SAPI1 Register D_SAP1 Read/Write Address 0CH 50
8.1.14 D_ch SAPI2 Register D_SAP2 Read/Write Address 0DH 51
8.1.15 D_ch TEI Address Mask D_TAM Read/Write Address 0EH 51
8.1.16 D_ch TEI1 Register D_TEI1 Read/WriteAddress 0FH 51
8.1.17 D_ch TEI2 Register D_TEI2 Read/WriteAddress 10H 51
8.1.18 D_ch Receive Frame Byte Count High D_RBCH ReadAddress 11H 52
8.1.19 D_ch Receive Frame Byte Count Low D_RBCL ReadAddress 12H 52
8.1.20 Timer 2 TIMR2WriteAddress 13H 52
8.1.21 Layer 1_Ready Code L1_RCRead/WriteAddress 14H 53
8.1.22 Control Register CTL Read/Write Address 15H 53
8.1.23 Command/Indication Receive Register CIR ReadAddress 58H/16H 54
8.1.24 Command/Indication Transmit Register CIX Read/WriteAddress 17H 54
8.1.25 S/Q Channel Receive Register SQRReadAddress 18H 55
8.1.26 S/Q Channel Transmit Register SQXRead/WriteAddress 19H 55
8.1.27 Peripheral Control Register PCTLRead/WriteAddress 1AH 56
8.1.28 Monitor Receive Channel 0 MO0RReadAddress 1BH 57
8.1.29 Monitor Transmit Channel 0 MO0XRead/WriteAddress 1CH 57
8.1.30 Monitor Channel 0 Interrupt Register MO0IRead_clearAddress 1DH 57
8.1.31 Monitor Channel 0 Control Register MO0CRead/Write Address 1EH 58
8.1.32 GCI Mode Control/Status Register GCRRead/WriteAddress 1FH 58
8.1.33 Peripheral Data Register 1 XDATA1Read/WriteAddress 3DH 59
8.1.34 Peripheral Data Register 2 XDATA2Read/WriteAddress 3EH 60
8.1.35 Monitor Receive Channel 1 Register MO1RRead Address 40H 60
8.1.36 Monitor Transmit Channel 1 Register MO1XRead/Write Address 41H 61
8.1.37 Monitor Channel 1 Interrupt Register MO1IRead_clearAddress 42H 61
8.1.38 Monitor Channel 1 Control Register MO1CRead/Write Address 43H 61
8.1.39 GCI IC1 Receive Register IC1RReadAddress 44H 62
8.1.40 GCI IC1 Transmit Register IC1XRead/WriteAddress 45H 62
8.1.41 GCI IC2 Receive Register IC2RReadAddress 46H 62
8.1.42 GCI IC2 Transmit Register IC2XRead/WriteAddress 47H 62
8.1.43 GCI CI1 Indication Register CI1RReadAddress 48H 63
8.1.44 GCI CI1 Command Register CI1XRead/WriteAddress 49H 63
8.1.45 GCI Extended Interrupt Register GCI_EXIR Read_clear Address 4AH 63
8.1.46 GCI Extended Interrupt Mask Register GCI_EXIM Read/Write Address 4BH 64
8.2 B1 HDLC CONTROLER 64
8.2.1 B1_ch receive FIFO B1_RFIFOReadAddress 20H 65
8.2.2 B1_ch transmit FIFO B1_XFIFOWriteAddress 21H 65
8.2.3 B1_ch command register B1_CMDRRead/WriteAddress 22H 66
8.2.4 B1_ch Mode Register B1_MODE Read/WriteAddress 23H 67
8.2.5 B1_ch Extended Interrupt Register B1_EXIR Read_clear Address 24H 68

Downloaded from Elcodis.com electronic components distributor

8.2.6 B1_ch Extended Interrupt Mask Register B1_EXIM Read/Write Address 25H *69*
8.2.7 B1_ch Status Register B1_STAR ReadAddress 26H *69*
8.2.8 B1_ch Address Mask Register 1 B1_ADM1 Read/WriteAddress 27H *70*
8.2.9 B1_ch Address Mask Register 2 B1_ADM2 Read/WriteAddress 28H *70*
8.2.10 B1_ch Address Register 1 B1_ADR1 Read/WriteAddress 29H *70*
8.2.11 B1_ch Address Register 2 B1_ADR2 Read/WriteAddress 2AH *70*
8.2.12 B1_ch Receive Frame Byte Count Low B1_RBCL Read Address 2BH *71*
8.2.13 B1_ch Receive Frame Byte Count High B1_RBCH Read Address 2CH *71*
8.2.14 B1_ch Transmit Idle Pattern B1_IDLE Read/Write Address 2DH *71*
8.3 B2 HDLC CONTROLLER 72

9. ELECTRICAL CHARACTERISTICS 73

9.1 ABSOLUTE MAXIMUM RATING 73
9.2 POWER SUPPLY 73
9.3 DC CHARACTERISTICS 73
9.4 PRELIMINARY SWITCHING CHARACTERISTICS 75
9.4.1 PCM Interface Timing *75*
9.4.2 8-bit Microprocessor Timing *76*
9.5 AC TIMING TEST CONDITIONS 78

10. ORDERING INFORMATION 79

11. PACKAGE SPECIFICATIONS 80

Downloaded from Elcodis.com electronic components distributor

LIST OF FIGURES

FIG.3.1 W66910 PIN CONFIGURATION - INTEL BUS MODE....9
FIG.3.2 W66910 PIN CONFIGURATION - MOTOROLA BUS MODE....10
FIG.5.1 W66910 INTERFACE CIRCUIT FOR ISDN EMBEDED APPLICATION....13
FIG.6.1 W66910 FUNCTIONAL BLOCK DIAGRAM....14
FIG.7.1 FRAME STRUCTURE AT S/T INTERFACE....17
FIG.7.2 W66910 WIRING CONFIGURATION IN TE APPLICATIONS....18
FIG.7.3 EXTERNAL TRANSMITTER CIRCUITRY....19
FIG.7.4 EXTERNAL RECEIVER CIRCUITRY....19
FIG.7.5 LAYER 1 ACTIVATION/DEACTIVATION STATE DIAGRAM - NORMAL MODE....24
FIG.7.6 LAYER 1 ACTIVATION/DEACTIVATION STATE DIAGRAM - SPECIAL MODE....25
FIG.7.7 SSP AND SCP TEST SIGNALS....30
FIG 7.8 GCI MODE CHANNEL STRUCTURE....39

Downloaded from Elcodis.com electronic components distributor

LIST OF TABLES

TABLE 4.1 W66910 PIN DESCRIPTIONS 11
TABLE 7.1 OUTPUT PHASE DELAY COMPENSATION TABLE 20
TABLE 7.2 LAYER 1 COMMAND CODES 22
TABLE 7.3 LAYER 1 INDICATION CODES 22
TABLE 7.4 D PRIORITY CLASSES 26
TABLE 7.5 D PRIORITY COMMANDS/INDICATIONS 26
TABLE 7.6 MULTIFRAME STRUCTURE IN S/T INTERFACE 29
TABLE 8.1 REGISTER ADDRESS MAP: CHIP CONTROL AND D CHANNEL HDLC 42
TABLE 8.2 REGISTER SUMMARY:CHIP CONTROL AND D CHANNEL HDLC 43
TABLE 8.3 REGISTER ADDRESS MAP: B1 CHANNEL HDLC 64
TABLE 8.4 REGISTER SUMMARY: B1 CHANNEL HDLC 65
TABLE 8.5 REGISTER ADDRESS MAP: B2 CHANNEL HDLC 72
TABLE 8.6 REGISTER SUMMARY: B2 CHANNEL HDLC 72

Downloaded from Elcodis.com electronic components distributor

1. GENERAL DESCRIPTION

The Winbond's single chip TE mode ISDN S/T interface controller (W66910) is an all-in-one device suitable for ISDN Internet access. Three HDLC controllers are incorporated in the chip, one for D channel and the other two for B channels. These HDLC controllers facilitate efficient access to signaling and data services. It also provides 8-bit microprocessor interface to serve as general purposed controller for embedded applications.

2. FEATURES

* Full duplex 2B + D S/T-interface transceiver compliant with ITU-T I.430 Recommendation, TE mode
* One D channel HDLC controller
- Maskable address recognition
- Transparent (HDLC) mode
- FIFO buffer (2 x 128 bytes)
* Two B channel HDLC controllers
- Maskable address recognition
- Bit rate options : 56 or 64 kbps
- Transparent (HDLC mode) or extended transparent mode (clear channel)
    - FIFO buffer (2 x 128 bytes) per B channel
    - 128K IDSL or OCN with one HDLC to bundle two B channels
* Two PCM codec interfaces for speech and POTS application
* Various B channel switching capabilities and PCM intercom
* GCI master/slave interface
* Peripheral control pins
* 8-bit microprocessor interface for embedded applications
* Analog power down mode to 1.5mA power consumption
* Advanced CMOS technology
* 100-pin LQFP package

Downloaded from Elcodis.com electronic components distributor

3. PIN CONFIGURATION

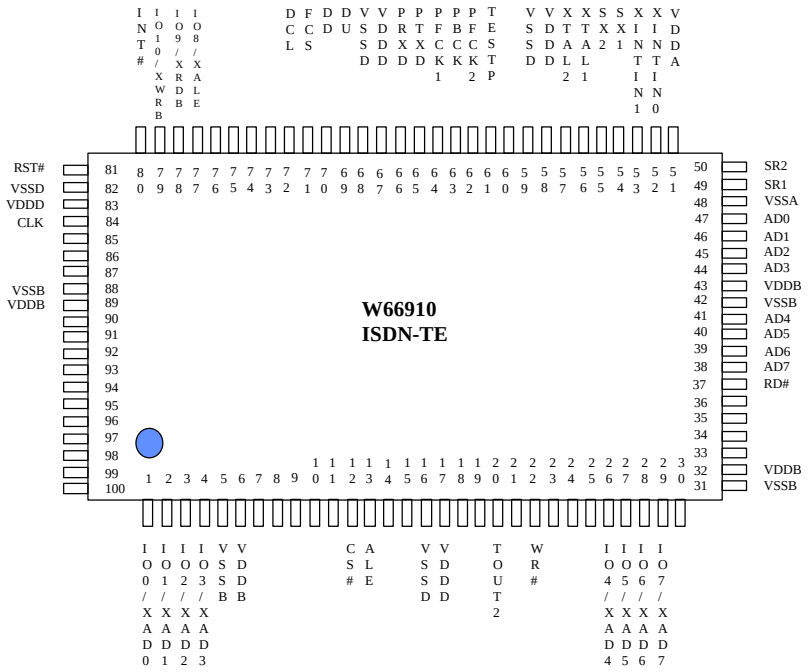

FIG.3.1 W66910 PIN CONFIGURATION - INTEL BUS MODE

Downloaded from Elcodis.com electronic components distributor

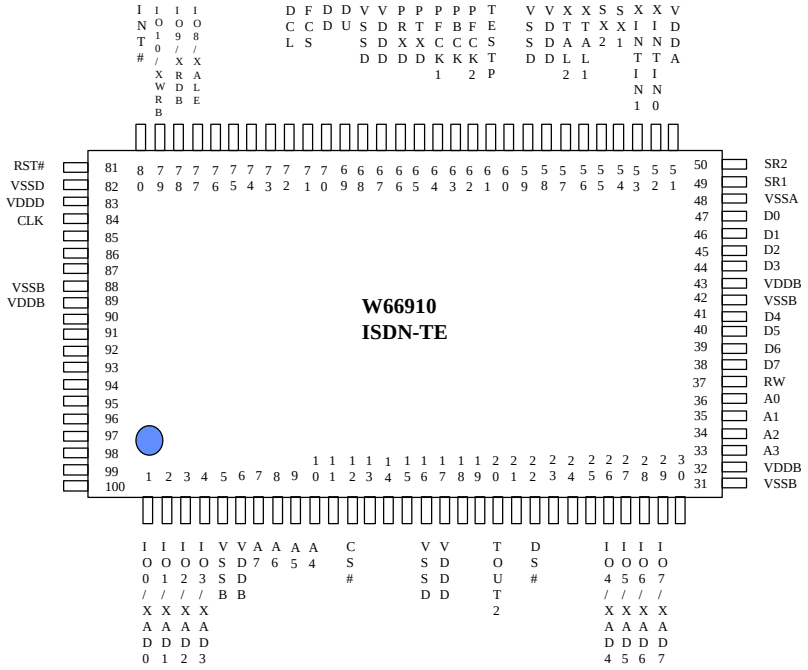

FIG.3.2 W66910 PIN CONFIGURATION - MOTOROLA BUS MODE

Downloaded from Elcodis.com electronic components distributor

4. PIN DESCRIPTION

TABLE 4.1 W66910 PIN

Notation : The suffix **"#"** indicates an active LOW signal. In Intel or Motorola bus mode, all unspecified pins must be left unconnected.

Pin Name	Pin Number	Type	Functions
Intel Bus Mode (Enabled when CLK=HIGH)			
CLK	84	I	This pin must be pulled to HIGH.
AD7-0	38,39,40,41,44,45,46,47	I/O	Multiplexed address and data. During the address phase, AD7-0 contains a 8-bit physical address. During the data phase, AD7-AD0 contains data.
CS#	12	I	Chip select.
ALE	13	I	Address Latch Enable. Used to latch addresses.
RD#	37	I	Read.
WR#	22	I	Write.
RST#	81	I	Reset.
INT#	80	O	Interrupt. This is a level sensitive, active LOW and open drain output.
Motorola Bus Mode (Enabled when CLK=LOW)			
CLK	84	I	This pin must be pulled to LOW.
D7-D0	38,39,40,41,44,45,46,47	I/O	Data.
A7-A0	7,8,9,10,33,34,35,36	I	Address.
CS#	12	I	Chip select.
DS#	22	I	Data strobe.
RW	37	I	Read/write identify. HIGH for read, and LOW for write.
RST#	81	I	Reset.
INT#	80	O	Interrupt. This is a level sensitive, active LOW and open drain output.
GCIBus			
DCL	72	I/O	GCI Bus Data Clock of the frequency: 1.536 MHz. Needs external pull-up.
FSC	71	I/O	GCI Bus Frame Synchronization Clock: 8KHz. Needs external pull-up.
DD	70	I/O	GCI Bus Data Downstream : Slave mode - input, master mode - output. Needs external pull-up.
DU	69	I/O	GCI Bus Data Upstream : Slave mode - output, master mode - input. Needs external pull-up.
PCMInterface			
PFCK1	64	O	PCM port 1 frame synchronization signal, with 8 KHz repetition rate and 8 bit pulse width.
PFCK2	62	O	PCM port 2 frame synchronization signal, with 8 KHz repetition rate and 8 bit pulse width.
PBCK	63	O	PCM bit synchronization clock of 1.536 MHz.
PTXD	65	O	PCM transmit data output. A maximum of two channels with 64 Kbit/s data rate can be multiplexed on this signal.
PRXD	66	I	PCM receive data input. A maximum of two channels with 64 Kbit/s

Downloaded from Elcodis.com electronic components distributor

			data rate can be multiplexed on this signal. Needs external pull-up.
ISDNSignalsandExternalCrystal			
SR1	49	I	S/T bus receiver input (negative).
SR2	50	I	S/T bus receiver input (positive).
SX1	54	O	S/T bus transmitter output (positive).
SX2	55	O	S/T bus transmitter output (negative).
XTAL1	56	I	Crystal or Oscillator clock input. The clock frequency: 7.68MHz±100PPM.
XTAL2	57	O	Crystal clock output. Left unconnected when using oscillator.
FunctionalTest			
TESTP	61	I	Used to enable normal operation (1) or enter test mode (0).
Peripheral Control			
TOUT2	20	O	Timer 2 output. A square wave with 50 % duty cycle, 1~63 ms period can be generated.
XINTIN0	52	I	A level change (either direction) will generate a maskable interrupt on the interrupt request pin INT#.
XINTIN1	53	I	A level change (either direction) will generate a maskable interrupt on the interrupt request pin INT#.
IO10-IO0	79,78,77,29,28, 27,26,4,3,2,1	I/O	When confiured as simple IO mode (PCTL:XMODE = 0), these pinscan read/write data from/to peripheral components. The pin directions are selected via register. After hardware reset, the output drivers are disabled.
XAD7-XAD0	29,28,27,26, 4,3,2,1	I/O	When configured as microprocessor mode (PCTL:XMODE = 1), address and data are multiplexed on these pins.
XALE	77	O	When configured as microprocessor mode (PCTL:XMODE = 1), this is the Address Latch Enable output.
XRDB	78	O	When configured as microprocessor mode (PCTL:XMODE = 1), this is the read pulse.
XWRB	79	O	When configured as microprocessor mode (PCTL:XMODE = 1), this is the write pulse.
Power and Ground			
VDDD	17,58,67,83	I	Digital Power Supply (5V±5%).
VDDA	51	I	Analog Power Supply (5V±5%).
VDDB	6,32,43,89	I	Power Supply (5V±5%).
VSSD	16,59,68,82	I	Digital Ground.
VSSA	48	I	Analog Ground.
VSSB	5,31,42,88	I	Ground.

Downloaded from Elcodis.com electronic components distributor

5. SYSTEM DIAGRAM AND APPLICATIONS

Typical applications include :

- ISDN TA, Router or other embedded application

The all-in-one characteristic of W66910 makes it excellent for ISDN embeded application. W66910 integrates three HDLC controllers in the chip and interfaces to 8-bit microprocessor bus directly. In addition, W66910 provides peripheral control circuits for PCM CODEC and POTS interface.

In the following application, only a few TTL-like glue circuits are needed for the two POTS interface control.

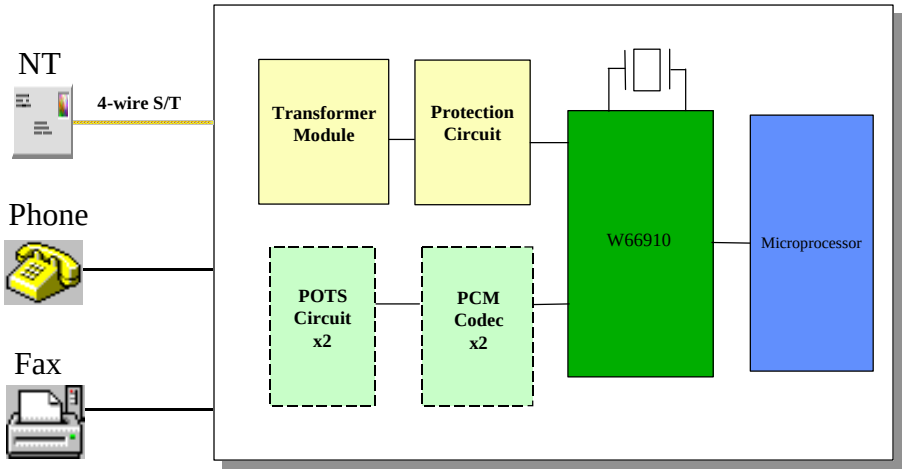

FIG.5.1 W66910 INTERFACE CIRCUIT FOR ISDN EMBEDED APPLICATION

Downloaded from Elcodis.com electronic components distributor

6. BLOCK DIAGRAM

The block diagram of W66910 is shown in Figure 6.1

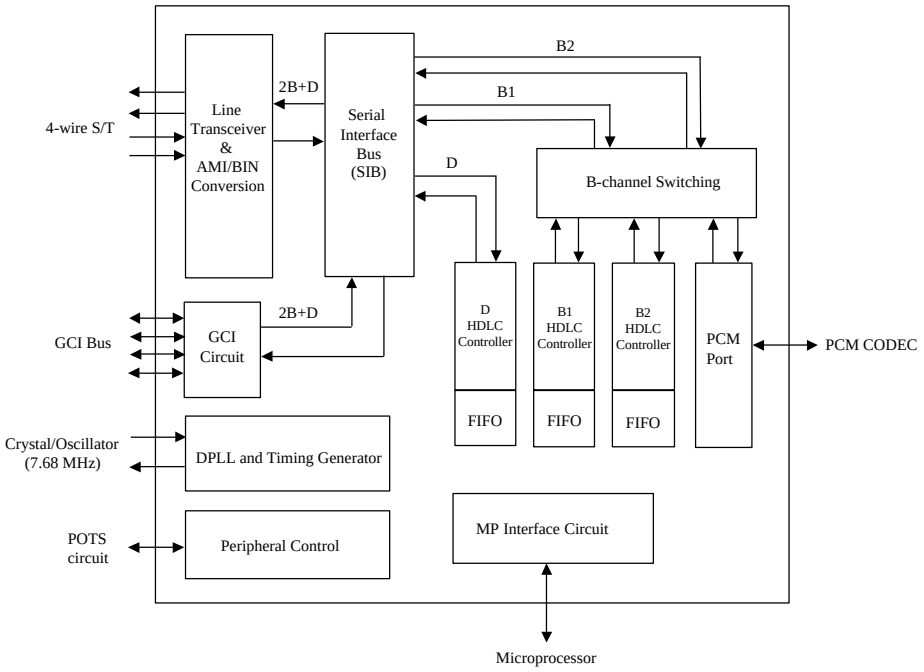

FIG.6.1 W66910 FUNCTIONAL BLOCK DIAGRAM

Downloaded from Elcodis.com electronic components distributor

7. FUNCTIONAL DESCRIPTIONS

7.1 Main Block Functions

The functional block diagram of W66910 is shown in Fig.6.1. The main function blocks are :
- Layer 1 function according to ITU-T I.430
- Serial Interface Bus (SIB)
- B channel switching
- GCI bus interface
- PCM port (x 2) and internal B channel switching
- D channel HDLC controller
- B channel HDLC controllers (x 2)
- Peripheral control

The layer 1 function includes:
- S/T bus transmitter/receiver
- Timing recovery using Digital Phase Locked Loop (DPLL) circuit
- Layer 1 activation/deactivation, TE mode
- D channel access control
- Frame alignment
- Multi-frame synchronization
- Test functions

The serial interface bus performs the multiplexing/demultiplexing of D and 2B channels.

The B channel switching determines the connection between layer 1/GCI, layer 2 and PCM.

The GCI circuit is used to connect a U transceiver (slave mode) or other slave GCI device such as CODEC (master mode).

The PCM port provides two 64 kbps clear channels to connect to PCM codec chips.

The D channel HDLC controller performs the LAPD (Link Access Procedure on the D channel) protocol according to ITU-T I.441/Q.921 recommendation.

There are two independent B channel HDLC controllers. They can be used to support HDLC-like protocols such as Internet PPP. Two S/T B channels can also be programmed to 128Kbps mode with one HDLC controller to support IDSL or OCN (in Japan) application.

In embedded application, a 8-bit microprocessor interface is used to control the chip.

The peripheral control block is used to control other peripheral devices such as CODEC, SLIC, DTMF detector, LEDs.

Downloaded from Elcodis.com electronic components distributor

7.2 Layer 1 Functions Descriptions

The layer 1 functions includes :

- Transmitter/Receiver which conform to the electrical specifications of ITU-T I.430
- Receiver clock recovery and timing generation
- Output phase delay (deviation) compensation
- Layer 1 activation/deactivation procedures
- D channel access control
- Frame alignment
- Multi-frame synchronization
- Test functions

7.2.1 S/T Interface Transmitter/Receiver

According to ITU-T I.430, pseudo-ternary code with 100% pulse width is used in both directions of transmission on the S/T interface. The binary "1" is represented by no line signal (zero volt), whereas a binary "0" is represented by a positive or negative pulse.

Data transmissions on the S/T interface are arranged as frame structures. The frame is 250 μs long and consists of 48 bits, which corresponds to a 192 kbit/s line rate. Each frame carries two octets of B1 channel, two octets of B2 channel and four D channel bits. Therefore, the 2B+D data rate is 144 kbit/s. The frame structure is shown in Fig.7.1.

The frame begin is marked by a framing bit, which is followed by a DC balancing bit. The first binary "0" following the framing bit balancing bit is of the same polarity as the framing bit balancing bit, and subsequent binary zeros must alternate in polarity.

Downloaded from Elcodis.com electronic components distributor

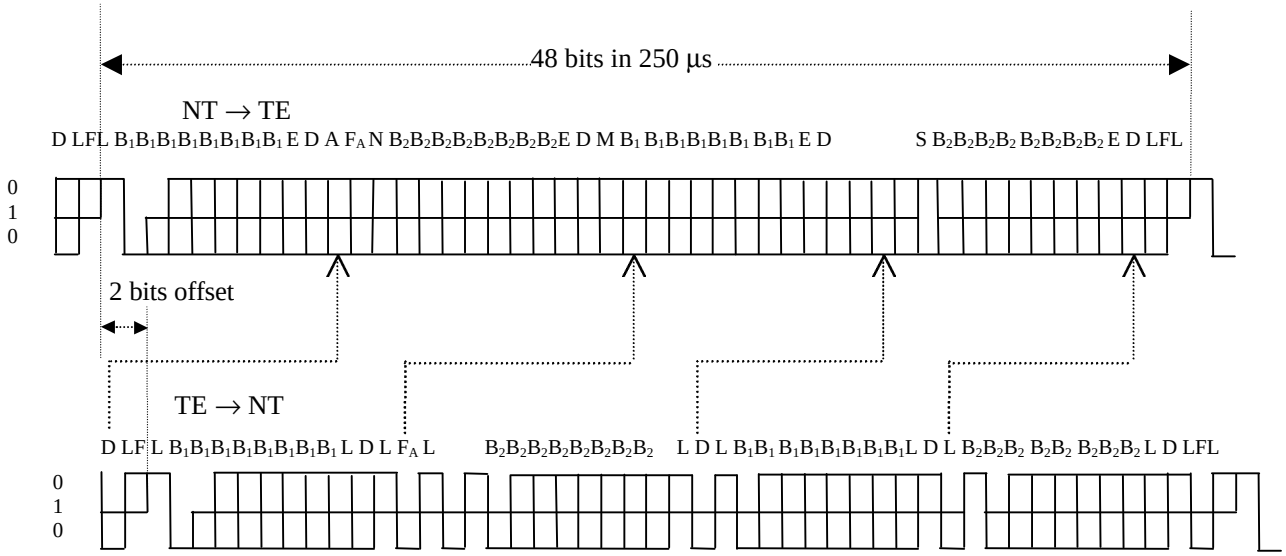

F = Framing bit
L = DC balancing bit
D = D channel bit
E = D channel echo bit
F_A = Auxiliary framing bit or Q-bit

N = Bit set to a binary value N= NOT F_A
B1 = Bit within B channel 1
B2 = Bit within B channel 2
A = Bit used for activation
S = Bit used for S channel
M = Multiframe bit

FIG.7.1 FRAME STRUCTURE AT S/T INTERFACE

There are three wiring configurations according to I.430 : point-to-point, short passive bus and extended passive bus. They are shown in Fig.7.2.

Downloaded from Elcodis.com electronic components distributor

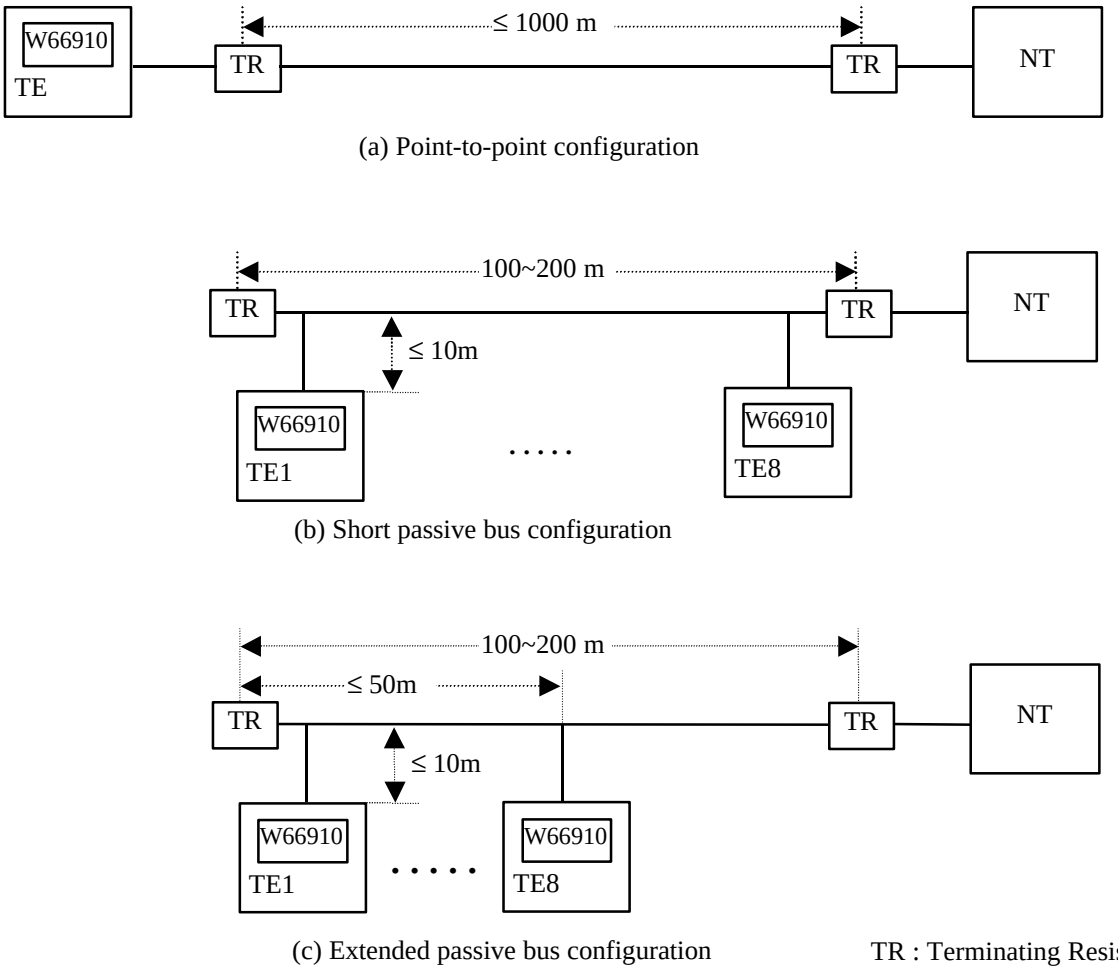

(a) Point-to-point configuration

(b) Short passive bus configuration

(c) Extended passive bus configuration

TR : Terminating Resistor

FIG.7.2 W66910 WIRING CONFIGURATION IN TE APPLICATIONS

Downloaded from Elcodis.com electronic components distributor

The transmitter and receiver are implemented by differential circuits to increase signal to noise ratio (SNR). The nominal differential line pulse amplitude at 100 Ω termination is 750 mV, zero to peak. Transformers with 2:1 turn ration are needed at transmitter and receiver for voltage level translation and DC isolation.

To meet the electrical characteristic requirements in I.430, some additional circuits are needed. At the transmitter side, the external resistors (18 to 33 Ω) are used to adjust the output pulse amplitude and to meet the transmitter active impedance (≥ 20 Ω) when transmitting binary zeros. At the receiver side, the 1.8 kΩ resistors protect the device inputs, while the 10 kΩ resistors (1.8 kΩ +8.2 kΩ) limit the peak current in impedance tests. The diode bridge is used for overvoltage protection.

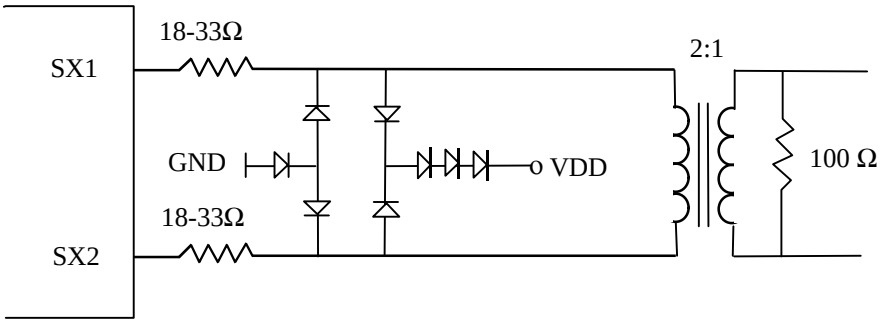

FIG.7.3 EXTERNAL TRANSMITTER CIRCUITRY

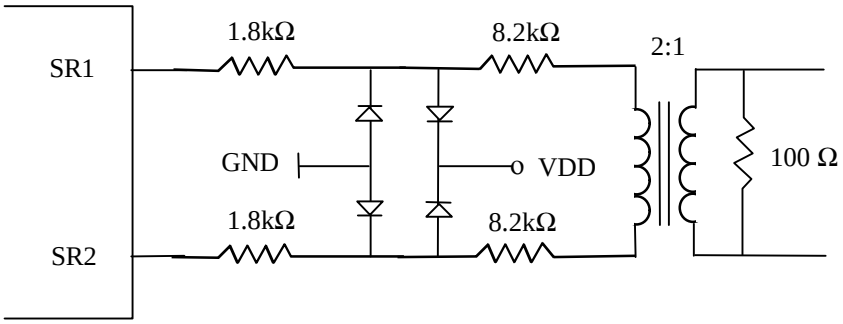

FIG.7.4 EXTERNAL RECEIVER CIRCUITRY

Downloaded from Elcodis.com electronic components distributor

After hardware reset, the receiver may enter power down state in order to save power consumption. In this state, the internal clocks are turned off, but the analog level detector is still active to detect signal coming from the S interface. The power down state is left either by non-INFO 0 signal from S interface or C/I command from microprocessor.

7.2.2 Receiver Clock Recovery And Timing Generation

A Digital Phase Locked Loop (DPLL) circuit is used to derive the receive clock from the received data stream. This DPLL uses a 7.68 MHz clock as reference. According to I.430, the transmit clock is normally delayed by 2 bit time from the receive clock. The "total phase deviation from input to output" is -7% to +15% of a bit period. In some cases, delay compensation may be needed to meet this requirement (see OPS1-0 bits in D_CTL register).

TABLE 7.1 OUTPUT PHASE DELAY COMPENSATION TABLE

OPS1	OPS0	Effect
0	0	No phase delay compensation
0	1	Phase delay compensation 260 ns
1	0	Phase delay compensation 520 ns
1	1	Phase delay compensation 1040 ns

W66910 does not need RC filter on receiver side, therefore zero delay compensation is selected normally. This is also the default setting.

The PCM output clocks (PFCK1-2, PBCK) are locked to the S-interface timing with jitter. See the electrical specification.

7.2.3 Layer 1 Activation/Deactivation

The layer 1 activation/deactivation procedures are implemented by a finite state machine according to I.430 TE mode. The state transitions are triggered by signals received at S interface or commands issued from microprocessor. The state machine outputs signal to S interface and indication to microprocessor. The CIX register is used by microprocessor to issue command, and the CIR register is used by microprocessor to receive indication.

Some commands are used for special purposes. They are "layer 1 reset", "analog loopback", "send continuous zeros" and "send single zero".

7.2.3.1 States Descriptions And Command/Indication Codes

F3Deactivatedwithout clock

This is the "deactivated" state of ITU-T I.430. The receive line awake unit is active except during a hardware reset pulse. After reset, once the indication "1111" has been read out, internal clocks will turn off and stay at this state if INFO 0 is received on the S line. The turn off time is approximate 93 ms. The ECK command must be issued to activate the clocks.

F3Deactivatedwith clock

Downloaded from Elcodis.com electronic components distributor

This state is identical to "F3 Deactivated without clock" except the internal clocks are enabled. The state is entered by the ECK command. The clocks are enabled approximately 0.5 ms to 4 ms after the ECK command, depending on the crystal capacitances. (It is about 0.5 ms for 12pF to 33pF capacitance).

F3Awaiting Deactivation

The W66910 enters this state after receiving INFO 0 (in states F5 to F8) for 16ms (64 frames). This time constant prevents spurious effect on S interface. Any non-INFO 0 signal on the S interface causes transition to "F5 Identifying Input" state. If this transition does not occur in a specific time (500 - 1000 ms), the microprocessor may issue DRC or ECK command to deactivate layer 1.

F4Awaiting Signal

This state is reached when an activate request command has been received. In this state, the layer 1 transmits INFO1 and INFO 0 is received from the S interface. The software starts timer T3 of I.430 when issuing activate request command. The software deactivates layer 1 if no signal other than INFO 0 has been received on S interface before expiration of T3.

F5Identifying Input

After the receipt of any non-INFO 0 signal from NT, the W66910 ceases to transmit INFO 1 and awaits identification of INFO 2 or INFO 4. This state is reached at most 50 µs after a signal different from INFO 0 is present at the receiver of the S interface.

F6Synchronized

When W66910 receives an activation signal (INFO 2), it responds with INFO 3 and waits for normal frames (INFO 4). This state is reached at most 6 ms after an INFO 2 arrives at the S interface (in case the clocks were disabled in "F3 Deactivated without clock").

F7Activated

This is the normal active state with the layer 1 protocol activated in both directions. From state "F6 Synchronized" , state F7 is reached at most 0.5 ms after reception of INFO 4. From state "F3 Deactivated without clock" with the clocks disabled, state F7 is reached at most 6 ms after the W66910 is directly activated by INFO 4.

F8Lost Framing

This is the state where the W66910 has lost frame synchronization and is awaiting resynchronization by INFO 2 or INFO 4 or deactivation by INFO 0.

Special States:

Analog Loop Initiated

On Enable Analog Loop command, INFO 3 is sent by the line transmitter internally to the line receiver (INFO 0 is sent to the line). The receiver is not yet synchronized.

Analog Loop Activated

The receiver is synchronized on INFO 3 which is looped back internally from the transmitter. The indication 'TI" or "ATI" is sent depending on whether or not a signal different from INFO 0 is detected on the S interface.

Send Continuous Pulses

A 96 kHz continuous pulse with alternating polarities is sent.

Downloaded from Elcodis.com electronic components distributor

Send Single Pulses

A 2 KHz , isolated pulse with alternating polarities is sent.

Layer 1 Reset

A layer 1 reset command forces the transmission of INFO 0 and disables the S line awake detector. Thus activation from NT is not possible.There is no indication in reset state. The reset state is disabled only with ECK command.

TABLE 7.2 LAYER 1 COMMAND CODES

Command	Symbol	Code	Description
Enable clock	ECK	0000	Enable internal clocks or to stop reset
Layer 1 reset	RST	0001	Layer 1 reset
Send continuous pulses	SCP	0100	Send continuous pulses at 96 kHz
Send single pulses	SSP	0010	Send isolated pulses at 2 kHz
Activate request at priority 8	AR8	1000	Activate layer 1 and set D channel priority level to 8
Activate request at priority 10	AR10	1001	Activate layer 1 and set D channel priority to 10
Enable analog loopback	EAL	1010	Enable analog loopback
Deactivate layer 1	DRC	1111	Deactivate layer 1 and disable internal clocks

TABLE 7.3 LAYER 1 INDICATION CODES

Indication	Symbol	Code	Descriptions
Clock Enabled	CE	0111	Internal clocks are enabled
Deactivate request downstream	DRD	0000	Deactivation request by S interface, i.e INFO 0 received
Level detected	LD	0100	Signal received, receiver not synchronous
Activate request downstream	ARD	1000	INFO 2 received
Test indication	TI	1010	Analog loopback activated or continuous zeros or single zeros transmitted
Awake test indication	ATI	1011	Level detected during test function
Activate indication with priority class 1	AI8	1100	INFO 4 received, D channel priority is 8 or 9
Activate indication with priority class 2	AI10	1101	INFO 4 received, D channel priority is 10 or 11
Clock disabled	CD	1111	Layer 1 deactivated, internal clocks are disabled

7.2.3.2 State Transition Diagrams

The followings are the state transition diagrams, which implement the activation/deactivation state matrix in I.430 (TABLE 5/I.430). The "command" and "s receive" entries in each state octagon keep the state, the "indication" and "s transmit" entries in each state octagon are the state outputs. For example, at "F3 Deactivated with clock" state, the layer 1 will stay at this state if the command is "ECK" and the INFO 0 is received on S interface. At this state, it provides "CE" indication to the microprocessor and transmits INFO 0 on S interface. The "AR8/10" command causes transition to F4 and non-INFO 0 signal causes transition to

Downloaded from Elcodis.com electronic components distributor

F5. Note that the command code writtern by the microprocessor in CIX register and indication code written by layer 1 in CIR register are transmitted repeatedly until a new code is written.

Downloaded from Elcodis.com electronic components distributor

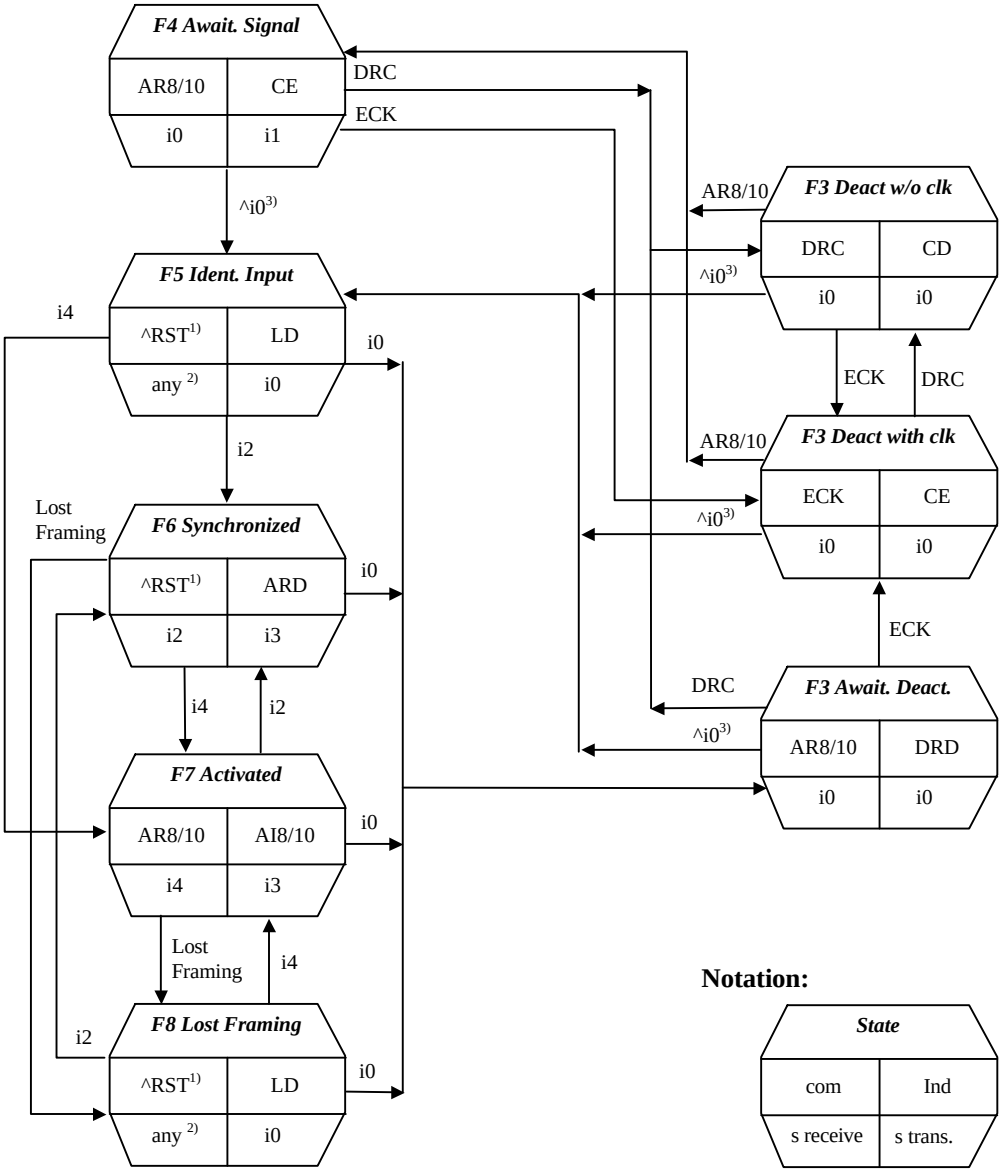

Note:
1. "^RST" means "NOT layer 1 reset command".
2. "Any" means any signal other than i0, which has not yet been determined.
3. "^i0" means any signal other than i0.

FIG.7.5 LAYER 1 ACTIVATION/DEACTIVATION STATE DIAGRAM - NORMAL MODE

Downloaded from Elcodis.com electronic components distributor

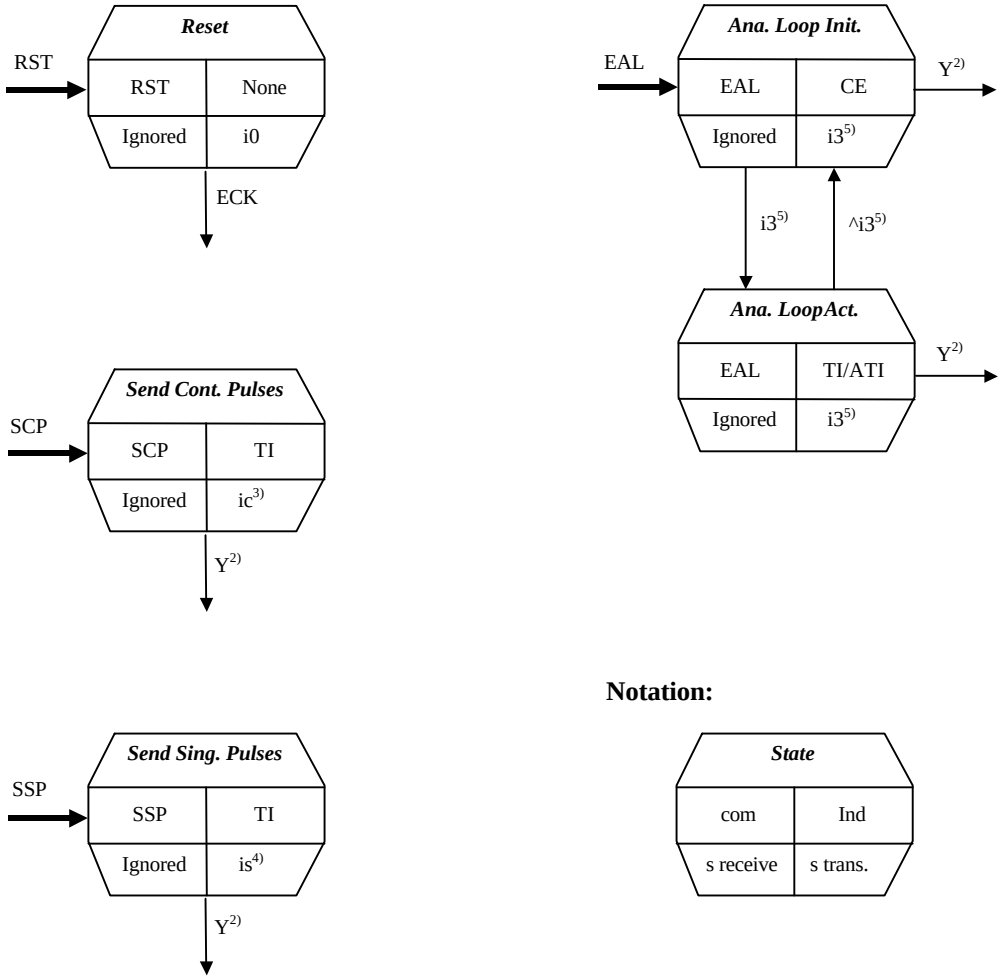

Note :

1. RST can be issued at any state, while SCP, SCZ and EAL can be issued only at F3 or F7.
2. Y is one of the commands : ECK, DRC, RST.
3. Continuous pulses at 96 kHz.
4. Isolated pulses at 2 kHz.
5. The INFO 3 is transmitted internally only.

FIG.7.6 LAYER 1 ACTIVATION/DEACTIVATION STATE DIAGRAM - SPECIAL MODE

Downloaded from Elcodis.com electronic components distributor

7.2.4 D Channel Access Control

The D channel access control includes collision detection and priority management. The collision detection is always enabled. The priority management procedure as specified in ITU-T I.430 is fully implemented in W66910.

A collision is detected if the transmitted D bit and the received E echo bit do not match. When this occurs, D channel transmission is immediately stopped, and the echo channel is monitored to attempt the next D channel access.

There are two priority classes: class 1 and class 2. Within each class, there are normal and lower priority levels.

TABLE 7.4 D PRIORITY CLASSES

	Normal level	Lower level
Priority class 1	8	9
Priority class 2	10	11

The selection of priority class is via the AR8/AR10 command. The following table summarizes the commands/indications used for setting the priority classes:

TABLE 7.5 D PRIORITY COMMANDS/INDICATIONS

Command	**Symbol**	**Code**	**Remarks**
Activate request, set priority 8	AR8	1000	Activation command, set D channel priority to 8
Activate request, set priority 10	AR10	1001	Activation command, set D channel priority to 10
Indication	**Abbr.**		**Remarks**
Activate indication with priority 8	AI8	1100	Info 4 received, D channel priority is 8 or 9
Activate indication with priority 10	AI10	1101	Info 4 received, D channel priority is 10 or 11

7.2.5 Frame Alignment

The following sections describe the behavior of W66910 in respect to the CTS-2 conformance test procedures for frame alignment. Please refer to ETSI-TM3 Appendix B1 for detailed descriptions.

Downloaded from Elcodis.com electronic components distributor

7.2.5.1 FAinfA_1fr

This test checks if TE does not lose frame alignment on receipt of one bad frame. The pattern for the bad frame is defined as IX_96 kHz. This pattern consists of alternating pulses at 96 kHz during the whole frame.

Device	Settings	Result
W66910	None	Pass

7.2.5.2 FAinfB_1fr

This test checks if TE does not lose frame alignment on receipt of one IX_I4noflag frame which has no framing and balancing bit.

Device	Settings	Result
W66910	None	Pass

7.2.5.3 FAinfD_1fr

This test checks if TE does not lose frame alignment on receipt of one IX-I4viol16 frame. The IX_I4viol16 frame remains at binary "1" until the first B2 bit which is bit position 16. The pulse sequences are: Framing bit, balancing bit, B2 bit, M bit, S bit, balancing bit. The TE should reflect the received F_A bit (F_A="1") in the transmitted frame.

Device	Settings	Result
W66910	None	Pass

7.2.5.4 FAinfA_kfr

This is to test the number k of IX_96 kHz frames necessary for loss of frame alignment.

Device	Settings	Result
W66910	k =2	Pass

7.2.5.5 FAinfB_kfr

This is to test the number k of IX_I4noflag frames necessary for loss of frame alignment.

Downloaded from Elcodis.com electronic components distributor

Device	Settings	Result
W66910	k =2	Pass

7.2.5.6 FAinfD_kfr

This is to test the number k of IX_I4noflag frames necessary for loss of frame alignment.

Device	Settings	Result
W66910	k = 2	Pass

7.2.5.7 Faregain

This is to test the number m of good frames necessary for regain of frame alignment. The TE regains frame alignment at m+1 frame.

The W66910 achieves synchronization after 5 frames, i.e m=4.

Device	Settings	Result
W66910	m = 4	Pass

7.2.6 Multiframe Synchronization

As specified by ITU-T I.430, the Q bit is transmitted from TE to NT in the position normally occupied by the auxiliary framing bit (F_A) in one frame out of 5, whereas the S bit is transmitted from NT to TE. The S and Q bit positions and multiframe structure are shown in Table 7.6.

The functions provided by W66910 are:

- Multiframe synchronization: Synchronization is achived when the M bit pattern has been correctly received during 20 consecutive frames starting from frame number 1.
  Note: Criterion for multiframe synchronization is not defined in I.430 Recommendation.
- S bits receive and detect: When synchronization is achieved, the four received S bits in frames 1,6,11,16 are stored as S1 to S4 in the SQR register respectively. A change in the recived four bits (S1-4) is indicated by an interrupt.
- Multiframe synchronization monitoring: Multiframe synchronization is constantly monitored. The synchronization state is indicated by the MSYN bit in the SQR register.
- Q bits transmit and F_A mirroring: When multiframe synchronization is achived, the four bits Q1-4 stored in the SQXR register are transmitted as the four Q bits (F_A-bit position) in frames 1,6,11 and 16. Otherwise the F_A bit transmitted is a mirror of the received F_A-bit. At loss of synchronization, the mirroring is resumed at the next F_A-bit.

Downloaded from Elcodis.com electronic components distributor

- The multiframe synchronization can be disabled by setting MFD bit in the D_MODE register.
- According to I.430 Recommendation, the S/Q channel can be used as operation and maintenance signalling channel. At transmitter, a S/Q code for a message shall be repeated at least six times or as many as necessary to obtain the desired response. At receiver, a message shall be considered received only when the proper codes is received three consecutive times.

TABLE 7.6 Multiframe structure in S/T interface

Frame Number	NT-to-TE F_A-bit position	NT-to-TE M bit	NT-to-TE S bit	TE-to-NT F_A-bit position
1	ONE	ONE	S1	Q1
2	ZERO	ZERO	ZERO	ZERO
3	ZERO	ZERO	ZERO	ZERO
4	ZERO	ZERO	ZERO	ZERO
5	ZERO	ZERO	ZERO	ZERO
6	ONE	ZERO	S2	Q2
7	ZERO	ZERO	ZERO	ZERO
8	ZERO	ZERO	ZERO	ZERO
9	ZERO	ZERO	ZERO	ZERO
10	ZERO	ZERO	ZERO	ZERO
11	ONE	ZERO	S3	Q3
12	ZERO	ZERO	ZERO	ZERO
13	ZERO	ZERO	ZERO	ZERO
14	ZERO	ZERO	ZERO	ZERO
15	ZERO	ZERO	ZERO	ZERO
16	ONE	ZERO	S4	Q4
17	ZERO	ZERO	ZERO	ZERO
18	ZERO	ZERO	ZERO	ZERO
19	ZERO	ZERO	ZERO	ZERO
20	ZERO	ZERO	ZERO	ZERO
1	ONE	ONE	S1	Q1
2	ZERO	ZERO	ZERO	ZERO
etc.				

7.2.7 Test Functions

The W66910 provides loop and test functions as follows:

Downloaded from Elcodis.com electronic components distributor

- **Digital loop** via DLP bit in D_MODE register: In the layer 2 block, the transmitted 2B+D data are internally looped (from HDLC transmitter to HDLC receiver), and in the PCM ports, the transmitted B channels are internally looped (from PCM inputs to PCM outputs). The clock timings are generated internally and are independent of the S bus timing. This loop function is used for test of PCM and higher layer functions, excluding layer 1. After hardware reset, W66910 will power down if S bus is not connected or if there is no signal on the S bus. In this case, the C/I command ECK must be issued to power up the chip.
- **Analog loop** via the C/I command EAL: The analog S interface transmitter is internally connected to the S interface receiver. When the receiver has synchronized itself to the internal INFO 3 signal, the message "Test Indication" or "Awake Test Indication" is delivered to the CIR register. No signal is transmitted over the S interface.
  In this mode, the S interface awake detector is enabled. Therefore if a level (INFO 2/ INFO 4) is detected on the S interface, this will be reported by the "Awake Test Indication (ATI)" indication.
- **Remote loopback** via RLP bit in D_MODE register: The digital 2B data received from the S interface receiver is loopbacked to the S interface transmitter. The D channel is not looped. When RLP is enabled, layer 1 D channel is connected to HDLC port and DLP cannot be enabled.
- Transmission of special test signals via layer 1 command:
  * **Send Single Pulses** (SSP): To send isolated single pulses of alternating polarity, with pulse width of one bit time, 250 us apart, with a repetition frequency of 2 kHz.
  * **Send Continuous Pulses** (SCP): To send continuous pulses of alternating polarity, with pulse width of bit time. The repetition frequency is 96 kHz.

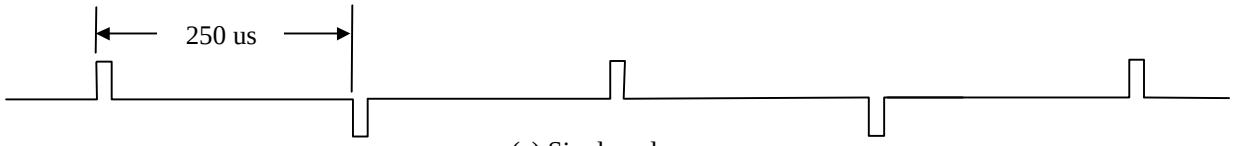

(a) Single pulses

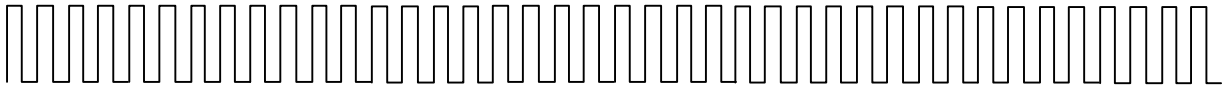

(b) Continuous pulses

FIG.7.7 SSP AND SCP TEST SIGNALS

Downloaded from Elcodis.com electronic components distributor

7.3 Serial Interface Bus

The 192 kbps S/T interface signal consists of two B channels (64 kbps each), one D channel (16 kbps) and other control signals. The multiplexing/demultiplexing functions are carried out in the Serial Interface Bus (SIB) block. In addition, the B1 and B2 channels can be individually set to carry 64 kbps or 56 kbps traffic.

7.4 B Channel Switching

There are three switching terminals in W66910: layer 1, layer 2, CODEC interface. Layer 1 can be S/T or U. CODEC interface can be PCM port or GCI bus. They are set in in GCR register.

GMODE	GACT	Layer 1	CODEC Interface	GCI Mode
0	0	internal S/T	PCM Port	Master
0	1	internal S/T	GCI Bus	Master
1	x	enternal U transceiver	PCM Port	Slave

The B1 and B2 channel switchings are programmed independently. The switching matrix is controlled by PXC bit in PCTL register and B1_SW[1:0], B2_SW[1:0] bits in B1_MODE and B2_MODE registers as follows :

PCM1/GCI_B1 Receive Table

PXC	B1_SW[1:0]	B2_SW[1:0]	PCM1/GCI_B1 Rx
0	00	xx	L1_B1
0	01	xx	L1_B1
0	10	xx	L2_B1
0	11	xx	PCM1/GCI_B1
1	xx	00	L1_B2
1	xx	01	L1_B2
1	xx	10	L2_B2
1	xx	11	PCM2/GCI_B2

PCM2/GCI_B2 Receive Table

PXC	B1_SW[1:0]	B2_SW[1:0]	PCM2/GCI_B2 Rx
0	xx	00	L1_B2
0	xx	01	L1_B2
0	xx	10	L2_B2
0	xx	11	PCM2/GCI_B2
1	00	xx	L1_B1
1	01	xx	L1_B1
1	10	xx	L2_B1
1	11	xx	PCM1/GCI_B1

Downloaded from Elcodis.com electronic components distributor

Layer2-B1 Receive Table

PXC	B1_SW[1:0]	B2_SW[1:0]	L2_B1 Rx
x	00	xx	L1_B1
x	01	xx	L1_B1
0	10	xx	PCM1/GCI_B1
1	10	xx	PCM2/GCI_B2
x	11	xx	L1_B1

Layer2-B2 Receive Table

PXC	B1_SW[1:0]	B2_SW[1:0]	L2_B2 Rx
x	xx	00	L1_B2
x	xx	01	L1_B2
0	xx	10	PCM2/GCI_B2
1	xx	10	PCM1/GCI_B1
x	xx	11	L1_B2

Layer1-B1 Receive Table

PXC	B1_SW[1:0]	B2_SW[1:0]	L1_B1 Rx
x	00	xx	L2_B1
0	01	xx	PCM1/GCI_B1
1	01	xx	PCM2/GCI_B2
x	10	xx	High
x	11	xx	L2_B1

Layer1-B2 Receive Table

PXC	B1_SW[1:0]	B2_SW[1:0]	L1_B2 Rx
x	xx	00	L2_B2
0	xx	01	PCM2/GCI_B2
1	xx	01	PCM1/GCI_B1
x	xx	10	High
x	xx	11	L2_B2

For example, to switch Layer1-B1 to/from PCM2/GCI_B2 : First look at Layer1-B1 receive table, we find that PXC=1 and B1_SW[1:0] = 01 in order to receive PCM2/GCI_B2. Secondly look at PCM2/GCI_B2 receive table, we find that, to receive L1_B1, there are two combinations of PXC, B1_SW[1:0] : 100 or 101. The logical AND result of these two tables is PXC=1, B1_SW[1:0]=01. This is the value which must be programmed in the registers.

Downloaded from Elcodis.com electronic components distributor

7.5 PCM Port

There are two PCM ports in W66910. Data is transmitted/ received when PFCK1/PFCK2 is HIGH. The frame synchronization clocks (PFCK1-2) are 8 kHz and the bit synchronization clock (PBCK) is 1.536 MHz.

7.6 D Channel HDLC Controller

There are two HDLC protocols that are used for ISDN layer 2 functions : LAPD and LAPB. Their frame formats are shown below.

LAPB modulo 8 :

flag (1 octet)	address (1octet)	control (1octet)	information (0 or N octets)	FCS (2 octets)	flag (1 octet)

Control field bits	7	6	5	4	3	2	1	0
I frame	N(R)			P	N(S)			0
S frame	N(R)			P/F	S	S	0	1
U frame	M	M	M	P/F	M	M	1	1

LAPB modulo 128 :

flag (1 octet)	address (1octet)	control (1 or 2 octets)	information (0 or N octets)	FCS (2 octets)	flag (1 octet)

	1st octet								2nd octet							
Control field bits	7	6	5	4	3	2	1	0	7	6	5	4	3	2	1	0
I frame	N(S)							0	N(R)							P
S frame	X	X	X	X	S	S	0	1	N(R)							P/F
U frame	M	M	M	P/F	M	M	1	1								

LAPD : modulo 128 only

flag (1 octet)	address (2 octets)	control (2 octets)	information (0 or N octets)	FCS (2 octets)	flag (1 octet)

	1st octet								2nd octet							
Control field bits	7	6	5	4	3	2	1	0	7	6	5	4	3	2	1	0
I frame	N(S)							0	N(R)							P/F
S frame	0	0	0	0	S	S	0	1	N(R)							P/F
U frame	M	M	M	P/F	M	M	1	1								

Downloaded from Elcodis.com electronic components distributor

7.6.1 D Channel Message Transfer Modes

The D channel HDLC controller operates in transparent mode.
Chracteristics:

- Receive frame address recognition
- Address comparison maskable bit-by-bit
- Flag generation / deletion
- Zero bit insertion/ deletion
- Frame Check Sequence (FCS) generation/ check with CRC_ITU-T

Note. The LAPD protocol uses the CRC_ITU-T for Frame Check Sequence. The polynominal is $X^{16} + X^{12} + X^{5} + 1$.

For address recognition, the W66910 provides four programmable registers for individual SAPI and TEI values, SAP1-2 and TEI1-2, plus two fixed values for group SAPI and TEI, SAPG and TEIG. The SAPG equals 02H(C/R=1) or 00H(C/R=0) which corresponds to SAPI = 0. The TEIG equals FFH which corresponds to TEI = 127. Incoming frame with 1st address octet= (SAP1 or SAP2 or SAPG) and 2nd address octet= (TEI1 or TEI2 or TEIG) will be stored in the receive FIFO, with flag and FCS fields being discarded and stuffed bits being removed.

The valid address combinations are :

- SAP1 and TEI1
- SAP1 and TEI=127
- SAP2 and TEI2
- SAP2 and TEI=127
- SAPI=0 and TEI1
- SAPI=0 and TEI2
- SAPI=0 and TEI=127

The receive frame address comparisons can be disabled (masked) per bit basis by setting the D_SAM and D_TAM registers, but comparisons with the SAPG or TEIG cannot be disabled.

7.6.2 Reception of Frames in D Channel

A 128-byte FIFO is provided in the receive direction. The data movement is handled by interrupts.

There are two interrupt sources: Receive Message Ready (D_RMR) and Receive Message End (D_RME). The D_RMR interrupt indicates that at least 64 bytes of data have been received and the message/ frame is not ended. Upon D_RMR interrupt, the

Downloaded from Elcodis.com electronic components distributor

microprocessor reads out 64 bytes of data from the FIFO. The D_RME interrupt indicates the last segment of a message or a message with length ≤ 64 bytes has been received. The length of data is less than or equal to 64 and is specified in the D_RBCL register.

If the length of the last segment of message is 64, only D_RME interrupt is generated and the RBC5-0 bits in D_RBCL register are 000000B.

The data between the opening flag and the CRC field are stored in D_RFIFO. For LAPD frame, this includes the address field, control field and information field.

When a D_RMR or D_RME interrupt is generated, the micro-processor must read out the data from D_RFIFO and issues the Receive Message Acknowledgement command (D_CMDR: RACK bit) to explicitly acknowledge the interrupt. The microprocessor must handle the interrupt before more than 64 bytes of data are received. This corresponds to a maximum microprocessor reaction time of 32 ms at 16 kbps data rate.

If the microprocessor is late in handling the interrupt, the incoming additional bytes will result in a "data overflow" interrupt and status bit.

7.6.3 Transmission of Frames in D Channel

A 128-byte FIFO is provided in the transmit direction. If the transmit FIFO is ready (which is indicated by a D_XFR interrupt), the micro-processor can write up to 64 bytes of data into the FIFO and use the XMS command bit to start frame transmission. The HDLC transmitter sends the opening flag first and then sends the data in the transmit FIFO.

The microprocessor must write the address, control and information field of a frame into the transmit FIFO.

Every time no more than 64 bytes of data are left in the transmit FIFO, the transmitter generates a D_XFR interrupt to request another block of data. The microprocessor can then write further data to the transmit FIFO and enables the subsequent transmission by issuing an XMS command.

If the data written to the FIFO is the last segment of a frame, the microprocessor issues the XME (Transmit Message End) and XMS command bits to finish the frame transmission. The transmitter then transmits the data in the FIFO and appends CRC and closing flag.

If the microprocessor fails to respond the D_XFR interrupt within a given time (32 ms), a data underrun condition will occur. The W66910 will automatically reset the transmitter and send inter frame time fill pattern (all 1's) on D channel. The microprocessor is informed about this condition via an XDUN (Transmit Data Underrun) interrupt in D_EXIR register. The microprocessor must wait until transmit FIFO ready (via XFR interrupt), re-write data, and issue XMS command to re-transmit the data.

It is possible to abort a frame by issuing a D_CMDR:XRST (D channel Transmitter Reset) command. The XRST command resets the transmitter and causes a transmit FIFO ready condition.

Downloaded from Elcodis.com electronic components distributor

After the microprocessor has issued the XME command, the successful termination of transmission is indicated by an D_XFR interrupt.

The inter-frame time fill pattern must be all 1's, according to ITU-T I.430.

Collisions which occur on the D channel of S interface will cause an D_EXIR:XCOL interrupt. A XRST (Transmitter Reset) command must be issued and software must wait until transmit FIFO ready (via XFR interrupt), re-write data, and issue XMS command to re-transmit the data.

7.7 B Channel HDLC Controller

There are two B channel HDLC controllers. Each B channel HDLC controller provides two operation modes :

- Transparent mode
Characteristics :
* 2 byte address field
* Receive address comparison maskable bit-by-bit
* Data between opening flag and CRC (not included) stored in receive FIFO
* Flag generation/ deletion
* Frame Check Sequence generation/ check with CRC_ITU-T polynominal
* Zero bit insertion/ deletion

- Extended transparent mode
Characteristics :
* All data transmitted/ received without modification
* No address comparison
* No flag generation/ detection
* No FCS generation/ check
* No bit stuffing

For PCM-HDLC connection, only extended transparent mode can be selected.

The data rate in B channel can be set at 64 kbps or 56 kbps by the B1_MODE (B2_MODE) : SW56 bit.

7.7.1 Reception of Frames in B Channel

A 128-byte FIFO is provided in the receive direction. The receive FIFO threshold can be set at 64 or 96 bytes by the Bn_MODE register. If the number of received data reaches the threshold, a Receive Message Ready (RMR) interrupt will be generated.

The operations for reception of frames differ in each mode:
Transparent mode: The received frame address is compared with the contents in receive address registers. In addition, the comparisons can be selectively masked bit-by-bit via address mask registers. Comparison is disabled when the corresponding mask bit is "1".

Downloaded from Elcodis.com electronic components distributor

In addition, flag recognition, CRC check and zero bit deletion are also performed. The result of CRC check is indicated in Bn_STAR: CRCE bit. The data between opening flag and CRC field (not included) is stored in receive FIFO. Two interrupts are used for the reception of data. The RMR interrupt in Bn_EXIR register indicates at least a threshold block of data have been put in the receive FIFO. The RME interrupt in Bn_EXIR register indicates the end of frame has been received. The micro-processor can read out a threshold length of data from receive FIFO at RMR interrupt, or all the data in receive FIFO at RME interrupt. At each RMR/ RME interrupt, micro-processor must issue a Receive Message Acknowledgement(RACK) command to explicitly acknowledge the interrupt.

The microprocessor reaction time for RMR/ RME interrupt depends on the FIFO threshold setting and B channel data rate. For example, it is 8 ms if the FIFO threshold is 64 and the B channel data rate is 64 kbps.

If the microprocessor is late in handling the interrupt, the incoming additional bytes will result in a "data overflow" interrupt and status bit.

Extended transparent mode: In this mode, all data received are stored in the receive FIFO without any modification. Every time up to a threshold length of data has been stored in the FIFO, a Bn_RMR interrupt is generated.

In this mode, there is no RME interrupt.

The microprocessor must react to the RMR interrupt in time, otherwise a "data overflow" interrupt and status bit will be generated.

7.7.2 Transmission of Frames in B Channel

A 128-byte FIFO is provided in the transmit direction. The FIFO threshold can be set at 64 or 96 bytes. The transmitter and receiver use the same FIFO threshold setting.

The transmit operations differ in both modes:

Transparent mode:
In this mode, the following functions are performed by the transmitter automatically:
- Flag generation
- CRC generation
- Zero bit insertion

The fields such as address, control and information are provided by the microprocessor and are stored in transmit FIFO. To start the frame transmission, the microprocessor issues a XMS (Transmit Message Start) command. The transmitter requests another block of data via XFR interrupt when more than a threshold length of vacancies are left in the FIFO.The micro-processor then writes up to a threshold length of data into the FIFO and activates the subsequent transmission of the frame by a XMS command too. The microprocessor indicates the end of the frame transmission by issuing XME (Transmit Message End) and XMS commands at the same time. The transmitter then transmits all the data left in the transmit FIFO and appends the CRC and closing flag. After this, a XFR interrupt is generated.

Downloaded from Elcodis.com electronic components distributor

The inter-frame time fill pattern can be programmed to 1's or flags.

During the frame transmission, the microprocessor reaction time for the XFR interrupt depends on the FIFO threshold setting and B channel data rate. For example, it is 8 ms if the FIFO threshold is 64 and the B channel data rate is 64 kbps. If the microprocessor fails to responds within the given reaction time, the transmit FIFO will be underrun. In this case, the W66910 will automatically reset the transmitter and send the inter frame time fill pattern on B channel. The microprocessor is informed about this via a Transmit Data Underrun interrupt (XDUN bit in Bn_EXIR register). The microprocessor must wait until transmit FIFO ready (via XFR interrupt), re-write data, and issue XMS command to re-transmit the data.

The microprocessor can abort a frame transmission by issuing a Transmitter Reset command (XRES bit in Bn_CMDR register). The XRES command resets the transmitter and sends inter frame time fill pattern on B channel. It also results in a transmit pool ready condition.

Extended transparent mode:
All the data in the transmit FIFO are transmitted without any modification, i.e. no flags and CRCs are inserted, and no bit stuffing is performed.

Transmission is started by a XMS command. The transmitter requests another block of data via XFR interrupt when more than a threshold length of vacancies are left in the FIFO. The microprocessor reacts to this condition by writing up to a threshold length of data into the transmit FIFO and issues a XMS command to continue the message transmission.

The microprocessor reaction time depends on the FIFO threshold setting and B channel data rate. For example, it is 8 ms if the FIFO threshold is 64 and the B channel data rate is 64 kbps. If the microprocessor fails to respond within the given reaction time, the transmit FIFO will hold no data to transmit. In this case, the W66910 will automatically reset the transmitter and send idle channel pattern defined in Bn_IDLE register. The microprocessor is informed about this via a Transmit Data Underrun interrupt (XDUN bit in Bn_EXIR register). The microprocessor must wait until transmit FIFO ready (via XFR interrupt), re-write data, and issue XMS command to re-transmit the data.

7.8 GCI Mode Serial Interface Bus

The GCI is a generalization and enchancement of the general purpose, serial interface bus. The channel structure of the GCI mode is depicted below. The timing is compatible with Siemens's IOM-2 TE mode.

Channel Structure of the W66910 GCI Mode:

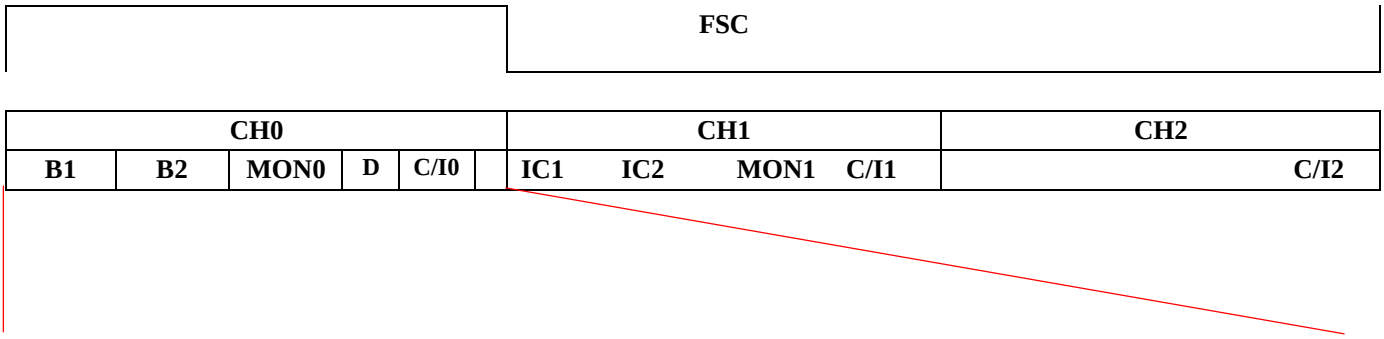

Downloaded from Elcodis.com electronic components distributor

B1	B2	Monitor	D	C/I	MR	MX

1st Octet2nd Octet3rd Octet4th Octet

DD,DU : 768 kbits/s
FSC : 8 kHz
DCL : 1536 kHz

FIG 7.8 GCI MODE CHANNEL STRUCTURE

GCI slave mode: connects to U transceiver such as PEB 2091, CH0 is used only.
GCI master mode: connects to PSB 2165 ARCOFI, uses B1, B2, IC1 and IC2 for voice communication, uses MON1 for programming, uses C/I1 for pins SA-SD access.

7.8.1 GCI Mode C/I0 Channel Handling

The Command/Indication channel 0 carries real-time status information between the W66910 and another device connected to the GCI bus interface.

One C/I0 channel conveys the commands and indications between a layer 1 device and layer 2 device. This C/I0 channel is accessed via register CIR (in receive direction, layer 1 to layer 2) and register CIX (in transmit direction, layer 2 to layer 1). The C/I code is 4-bit long.

- In the receive direction, the code from layer 1 is continuously monitored, with an interrupt being generated anytime a change occurs. A new code must be found in two consecutive GCI frames to be consided valid and to trigger a C/I code change interrupt status (double last look criterion).
- In the transmit direction, the code written in CIX is continuously transmitted in the channel.

7.8.2 GCI Mode Monitor Channel Handling

The Monitor channel protocol is a handshake protocol used for high speed information exchange between the W66910 and other devices. The Monitor channel is necessary for:

- Programming and controlling devices attached to the GCI interface.
- Data exchange between two microprocessor systems attached to two different devices on one GCI backplane. Use of the Monitor channel avoids the necessity of a dedicated serial communication path between two systems.

The Monitor channel operates on an asynchronous basis. While data transfers on the bus take place synchronized to frame sync, the flow of data is controlled by a handshake procedure using the Monitor Channel Receiver (MOR) and Monitor Channel Transmit (MOX) bits. When data is placed into the Monitor channel and the MX bit is activated. This data will be transmitted repeatedly once per 8 KHz frame until the transfer is acknowledged via the MR bit.

Downloaded from Elcodis.com electronic components distributor

The microprocessor may either enforce a 1 (idle state) in MR, MX by setting the control bit MRC or MXC (MOCR register) to 0, or enable the control of these bits internally by the W66910 according to the Monitor channel protocol. Thus, before a data exchange can begin, the control bit MRC, or MXC should be set to 1 by the microprocessor.

The relevant status bits are:

- For the reception of Monitor data: MDR (Monitor Channel Data Received) ⇔ MER (Monitor Channel End of Reception)
- For the transmission of Monitor data: MDA (Monitor Channel Data Acknowledged) ⇔ MAB (Monitor Channel Data Abort)

About the status bit MAC(Monitor Channel Transmit Active) indicates whether a transmission is progress**.**

- If set MAC = 0, the previous transmission has been terminated. Before starting a transmission, the microprocessor should verify that the transmitter is inactive.
- If set MAC = 1, after having written data into the Monitor Transmit Channel (MOX) register, the microprocessor sets this bit to 1. This enables the MX bit to go active (0), indicating the presence of valid Monitor data (contents of MOX) in the corresponding frame.

The receiving device stores the Monitor byte in its MOR (Monitor Receive Register) and generates a MDR (Monitor Channel Data Receive) interrupt status. Alerted by the MDR interrupt, the microprocessor reads the MOR register. When it is ready to accept data, it sets the MR control bit MRC to 1 to enable the receiver to store succeeding Monitor channel bytes and acknowledge them according to the Monitor channel protocol. In addition, it enables other Monitor channel interrupts by setting Monitor Channel Interrupt Enable to 1.

The first Monitor channel byte is acknowledged by the receiving device setting the MR bit to 0. This causes a MDA (Monitor Channel Data Acknowledge) interrupt status at the transmitter. A new Monitor channel data byte can now be written by the microprocessor in MOX register. The MX bit is still in the active (0) state. The transmitter indicates a new byte in the Monitor channel by returning the MX bit active after sending it once in the inactive state.The receiver stores the Monitor channel byte in MOR register and generates a new MDR interrupt status. When the microprocessor has read the MOR register , the receiver acknowledges the data by returning the MR bit active after sending it once in the inactive state.This in turn causes the transmitter to generate a MDA interrupt status. This ″MDA interrupt ⇒ write data ⇒ MDR interrupt ⇒ read data ⇒ MDA interrupt ″ handshake procedure is repeated as long as the transmitter has data to send.

When the last byte has been acknowledged by the receiver (MDA interrupt status), the microprocessor sets the Monitor channel Transmit Control bit MXC to 0. This enforces an inactive (1) state in the MX bit. Two frames of MX inactive signifies the end of a message. Thus, a MER (Monitor channel End of Reception) interrupt status is generated by the receiver when the MX is received in the inactive state in two consecutive frames. As a result, the microprocessor sets the MR control bit MRC to 0, which in turn enforces an inactive state in the MR bit. This marks the end of the transmittion, making the MAC (Monitor channel Active) bit return to 0.

During a transmission process, it is possible for the receiver to ask a transmission to be aborted by sending an inactive MR bit value in two consecutive frames. This is effected by the microprocessor writing the MR control bit MRC to 0. An aborted transmission is indicated by a MAB (Monitor Channel Data Abort) interrupt status at the transmitter.

7.9 8-bit Microprosessor Interface Circuit

At power up, the reset pin RST# must be asserted to initialize the chip. At rising edge of RST#, data value at CLK pin determines the operation modes: HIGH for Intel bus mode, LOW for Motorola bus mode.

7.10 Peripheral Control

Downloaded from Elcodis.com electronic components distributor

In application with POTS connection, the peripheral devices such as CODEC, DTMF and SLIC can be directly controlled by W66910, therefore reduce the IO requirement of microprocessor. The peripheral control function includes timer, interrupt inputs and programmable IO.

There are two timers implemented in W66910: TIMR1 and TIMR2. TIMR1 is a long period timer whcich can be used to control the cadence of ring tone. TIMR2 is a short period timer which can be used to generate the 20 Hz ring signal.

	Address	Interrupt status	Interrupt mask	Output pin	Period	Cyclic
TIMR1	10H	DEXIR:T1EXP	DEXIM:T1EXP	No	(0..127)x 100 ms	yes (CNT=7)
TIMR2	4CH	DEXIR:TIN2	DEXIM:TIN2	TOUT2	(1..63) ms	yes(TMD=1)

There are two interrupt input pins : XINTIN0, XINTIN1. Whenever signal level changes (eith rising or falling), a maskable interrupt is generated which in turn will make an interrupt request if it is unmasked. The interrupt status bits are ISTA:XINT0, ISTA:XINT1. The mask bits are IMASK:XINT0, IMASK:XINT1. In addition, the signal level can be read at bits SQR:XIND0, SQR;XIND1. These pins can be used to monitor SLIC hook state and/or DTMF data valid status.

The IO interface provides 11 pins. The pin data are accessed via XDATA1 and XDATA2 registers. The register data is output on the pin if its output enable bit is set, the read data reflects the current level of pin.

Downloaded from Elcodis.com electronic components distributor

8. REGISTER DESCRIPTIONS

Note : For all the internal registers, only byte access is allowed in all cases.

8.1 Chip Control and D_ch HDLC controller

TABLE 8.1 REGISTER ADDRESS MAP: CHIP CONTROL AND D CHANNEL HDLC

Section	Offset	Access	Register Name	Description
8.1.1	00	R	D_RFIFO	D channel receive FIFO
8.1.2	01	W	D_XFIFO	D channel transmit FIFO
8.1.3	02	W	D_CMDR	D channel command register
8.1.4	03	R/W	D_MODE	D channel mode control
8.1.5	04	R/W	TIMR1	Timer 1
8.1.6	05	R_clear	ISTA	Interrupt status register
8.1.7	06	R/W	IMASK	Interrupt mask register
8.1.8	07	R_clear	D_EXIR	D channel extended interrupt
8.1.9	08	R/W	D_EXIM	D channel extended interrupt mask
8.1.10	09	R	D_XSTA	D channel transmit status
8.1.11	0A	R	D_RSTA	D channel receive status
8.1.12	0B	R/W	D_SAM	D channel address mask 1
8.1.13	0C	R/W	D_SAP1	D channel individual SAPI 1
8.1.14	0D	R/W	D_SAP2	D channel individual SAPI 2
8.1.15	0E	R/W	D_TAM	D channel address mask 2
8.1.16	0F	R/W	D_TEI1	D channel individual TEI 1
8.1.17	10	R/W	D_TEI2	D channel individual TEI 2
8.1.18	11	R	D_RBCH	D channel receive frame byte count high
8.1.19	12	R	D_RBCL	D channel receive frame byte count low
8.1.20	13	R/W	TIMR2	Timer 2
8.1.21	14	R/W	L1_RC	GCI layer 1 ready code
8.1.22	15	R/W	CTL	Control register
8.1.23	16	R	CIR	Command/Indication receive
8.1.24	17	R/W	CIX	Command/Indication transmit
8.1.25	18	R	SQR	S/Q channel receive register
8.1.26	19	R/W	SQX	S/Q channel transmit register
8.1.27	1A	R/W	PCTL	Peripheral control register
8.1.28	1B	R	MO0R	Monitor receive channel 0
8.1.29	1C	R/W	MO0X	Monitor transmit channel 0
8.1.30	1D	R_clear	MO0I	Monitor channel 0 interrupt
8.1.31	1E	R/W	MO0C	Monitor channel 0 control register

Downloaded from Elcodis.com electronic components distributor

8.1.32	1F	R/W	GCR	GCI mode control/ status register
8.1.33	3D	R/W	XDATA1	Peripheral data register 1
8.1.34	3E	R/W	XDATA2	Peripheral data register 2
8.1.35	40	R	MO1R	Monitor receive channel 1
8.1.36	41	R/W	MO1X	Monitor transmit channel 1
8.1.37	42	R_clear	MO1I	Monitor channel 1 interrupt
8.1.38	43	R/W	MO1C	Monotor channel 1 control
8.1.39	44	R	IC1R	GCI IC1 receive
8.1.40	45	R/W	IC1X	GCI IC1 transmit
8.1.41	46	R	IC2R	GCI IC2 receive
8.1.42	47	R/W	IC2X	GCI IC2 transmit
8.1.43	48	R	CI1R	GCI CI1 indication
8.1.44	49	R/W	CI1X	GCI CI1 command
8.1.45	4A	R_clear	GCI_EXIR	GCI extended interrupt
8.1.46	4B	R/W	GCI_EXIM	GCI extended interrupt mask

TABLE 8.2 REGISTER SUMMARY:CHIP CONTROL AND D CHANNEL HDLC

Offset	R/W	Name	7	6	5	4	3	2	1	0
00	R	D_RFIFO								
01	W	D_XFIFO								
02	W	D_CMDR	RACK	RRST	0	STT1	XMS	0	XME	XRST
03	R/W	D_MODE	0	RACT	XACTB	0	0	MFD	DLP	RLP
04	R/W	TIMR1	T1MD	CNT6	CNT5	CNT4	CNT3	CNT2	CNT1	CNT0
05	R_clr	ISTA	D_RMR	D_RME	D_XFR	XINT1	XINT0	D_EXI	B1_EXI	B2_EXI
06	R/W	IMASK	D_RMR	D_RME	D_XFR	XINT1	XINT0	D_EXI	B1_EXI	B2_EXI
07	R_clr	D_EXIR	RDOV	XDUN	XCOL	TIN2	GCI	ISC	T1EXP	0
08	R/W	D_EXIM	RDOV	XDUN	XCOL	TIN2	GCI	ISC	T1EXP	1
09	R	D_XSTA	XDOW	0	XBZ	DRDY	0	0	0	0
0A	R	D_RSTA	0	RDOV	CRCE	RMB	0	0	0	0
0B	R/W	D_SAM	SAM7	SAM6	SAM5	SAM4	SAM3	SAM2	SAM1	SAM0
0C	R/W	D_SAP1	SA17	SA16	SA15	SA14	SA13	SA12	SA11	SA10
0D	R/W	D_SAP2	SA27	SA26	SA25	SA24	SA23	SA22	SA21	SA20
0E	R/W	D_TAM	TAM7	TAM6	TAM5	TAM4	TAM3	TAM2	TAM1	TAM0
0F	R/W	D_TEI1	TA17	TA16	TA15	TA14	TA13	TA12	TA11	TA10
10	R/W	D_TEI2	TA27	TA26	TA25	TA24	TA23	TA22	TA21	TA20
11	R	D_RBCH	VN1	VN0	LOV	RBC12	RBC11	RBC10	RBC9	RBC8
12	R	D_RBCL	RBC7	RBC6	RBC5	RBC4	RBC3	RBC2	RBC1	RBC0
13	W	TIMR2	TMD	TIDLE	TCN5	TCN4	TCN3	TCN2	TCN1	TCN0
14	R/W	L1_RC	0	0	0	0	RC3	RC2	RC1	RC0
15	R/W	CTL	0	0	SRST	0	0	0	OPS1	OPS0

Downloaded from Elcodis.com electronic components distributor

Offset	R/W	Name	7	6	5	4	3	2	1	0
16	R	CIR	SCC	ICC			CODR3	CODR2	CODR1	CODR0
17	R/W	CIX	0	0	0	0	CODX3	CODX2	CODX1	CODX0
18	R	SQR	XIND1	XIND0	MSYN	SCIE	S1	S2	S3	S4
19	R/W	SQX	0	0	0	SCIE	Q1	Q2	Q3	Q4
1A	R/W	PCTL	OE5	OE4	OE3	OE2	OE1	OE0	0	PXC
1B	R	MO0R								
1C	R/W	MO0X								
1D	R_clr	MO0I					MDR0	MER0	MDA0	MAB0
1E	R/W	MO0C	0	0	0	0	MRIE0	MRC0	MXIE0	MXC0
1F	R/W	GCR	MAC0	MAC1	GACT	TLP	GRLP	SPU	PD	GMODE
3D	R/W	XDATA1	IO7	IO6	IO5	IO4	IO3	IO2	IO1	IO0
3E	R/W	XDATA2						IO10	IO9	IO8
40	R	MO1R								
41	R/W	MO1X								
42	R_clr	MO1I					MDR1	MER1	MDA1	MAB1
43	R/W	MO1C	0	0	0	0	MRIE1	MRC1	MXIE1	MXC1
44	R	IC1R	IC1_7	IC1_6	IC1_5	IC1_4	IC1_3	IC1_2	IC1_1	IC1_0
45	R/W	IC1X	IC1_7	IC1_6	IC1_5	IC1_4	IC1_3	IC1_2	IC1_1	IC1_0
46	R	IC2R	IC2_7	IC2_6	IC2_5	IC2_4	IC2_3	IC2_2	IC2_1	IC2_0
47	R/W	IC2X	IC2_7	IC2_6	IC2_5	IC2_4	IC2_3	IC2_2	IC2_1	IC2_0
48	R	CI1R	0	0	CI1R_6	CI1R_5	CI1R_4	CI1R_3	CI1R_2	CI1R_1
49	R/W	CI1X	0	0	CI1X_6	CI1X_5	CI1X_4	CI1X_3	CI1X_2	CI1X_1
4A	R_clr	GCI_EXIR	0	0	0	MO1C	MO0C	IC1	IC2	CI1
4B	R/W	GCI_EXIM	1	1	1	MO1C	0	IC1	IC2	CI1

8.1.1 D_ch receive FIFO D_RFIFO Read Address 00H

The D_RFIFO has a length of 128 bytes.

After a D_RMR interrupt, exactly 64 bytes are available.

After a D_RME interrupt, the number of bytes available equals RBC5-0 bits in the D_RBCL register.

8.1.2 D_ch transmit FIFO D_XFIFO Write Address 01H

The D_XFIFO has a length of 128 bytes.

After an D_XFR interrupt, up to 64 bytes of data can be written into this FIFO for transmission. At the first time, up to 128 bytes of data can be written.

Downloaded from Elcodis.com electronic components distributor

8.1.3 D_ch command register D_CMDR Write Address 02H

Value after reset: 00H

7	6	5	4	3	2	1	0
RACK	RRST	0	STT1	XMS	0	XME	XRST

RACK Receive Acknowledge
After a D_RMR or D_RME interrupt, the processor must read out the data in D_RFIFO and then sets this bit to acknowledge the interrupt. Writing “0” to this bit has no effect.

RRST Receiver Reset
Setting this bit resets the D_ch HDLC receiver and clears the D_RFIFO data. Writing “0” to this bit has no effect.

STT1 Start Timer 1
The timer 1 is started when this bit is set to one. The timer is stopped when it expires or by a write of the TIMR1 register. Writing “0” to this bit has no effect.

XMS Transmit Message Start/Continue
Setting this bit will start or continue the transmission of a frame. The opening flag is automatically added by the HDLC controller. Writing “0” to this bit has no effect.

XME Transmit Message End
Setting this bit indicates the end of frame transmission.. The D_ch HDLC controller automatically appends the CRC and the closing flag after the data transmission. Writing “0” to this bit has no effect.
Note: If the frame ≤ 64 bytes, XME plus XMS commands must be issued at the same time.

XRST Transmitter Reset
Setting this bit resets the D_ch HDLC transmitter and clears the D_XFIFO. The transmitter will send inter frame time fill pattern (which is 1's) immediately. This command also results in a transmit FIFO ready condition. Writing “0” to this bit has no effect.

8.1.4 D_ch Mode Register D_MODE Read/Write Address 03H

Value after reset : 00H

7	6	5	4	3	2	1	0
0	RACT	XACTB	0	0	MFD	DLP	RLP

RACT Receiver Active

Downloaded from Elcodis.com electronic components distributor

Setting this bit activates the D_ch HDLC receiver. This bit can be read. The receiver must be in active state in order to receive data.

XACTB Transmitter Active

Resetting this bit activates the D_ch HDLC transmitter. This bit can be read. The transmitter must be in active state in order to transmit data. Note this bit is active LOW.

MFD Multiframe Disable

This bit is used to enable or disable the multiframe structure on S/T interface :

0 : Multiframe is enabled
1 : Multiframe is disabled

DLP Digital Loopback

Setting this bit activates the digital loopback function. The transmitted digital 2B+D channels are looped to the received 2B+D channels. Note that after hardware reset, the internal clocks will turn off if the S bus is not connected or if there is no signal on the S bus. In this case, the C/I command ECK must be issued to enable loopback function.

RLP Remote Loopback

Setting this bit to "1" activates the remote loopback function. The received 2B channels from the S interface are looped to the transmitted 2B channels ofS interface. The D channel is not looped in this loopback function.

Bits 7, 4, 3 Reserved

These bits are reserved. The write values are don't care, but are read as zero.

8.1.5 Timer 1 Register TIMR1 Read/Write Address 04H

Value after reset : 00H

7	6	5	4	3	2	1	0
T1MD	CNT6	CNT5	CNT4	CNT3	CNT2	CNT1	CNT0

T1MD Timer1 Mode

0 = Single mode: The timer counts once and generates a T1EXP interrupt when expires.
1 = Periodical mode: The timer counts periodically and generates an interrupt at each expiration.

CNT6-0 Count Value

The expiration time is defined as:
T1 = CNT[6:0] * 0.1 second

Downloaded from Elcodis.com electronic components distributor

After writing this register, STT1 bit in D_CMDR register must be set to start the timer. This register can be read only after the timer has been started. The read value indicates the timer's current count value. In case layer 1 is not activated, a C/I command "ECK" must be issued in addition to the STT1 command to start the timer.

The timer is stopped when it expires (T1MD=0) or TIMR1 register is re-written.

8.1.6 Interrupt Status Register ISTA Read_clear Address 05H

Value after reset : 00H

7	6	5	4	3	2	1	0
D_RMR	D_RME	D_XFR	XINT1	XINT0	D_EXI	B1_EXI	B2_EXI

D_RMR D_ch Receive Message Ready
A 64-byte data is available in the D_RFIFO. The frame is not complete yet.

D_RME D_ch Receive Message End
The last part of a frame with length > 64 bytes or a whole frame with length ≤ 64 bytes has been received. The whole frame length is obtained from D_RBCH + D_RBCL registers. The length of data in the D_RFIFO equals:
data length = RBC5-0if RBC5-0 ≠ 0
data length = 64if RBC5-0 =0

D_XFR D_ch Transmit FIFO Ready
This bit indicates that the transmit FIFO is ready to accept data. Up to 64 bytes of data can be written into the D_XFIFO.

An D_XFR interrupt is generated in the following cases :
- After an XMS command, when≥64 bytes of XFIFO is empty
- After an XMS together with an XME command is issued, when the whole frame has been transmitted
- After an XRST command
- After hardware reset

XINT1 XINTIN1 Interrupt
This bit indicates that level change occurs at XINTIN1 pin. Both positive and negative edges will cause an interrupt.

XINT0 XINTIN1 Interrupt
This bit indicates that level change occurs at XINTIN0 pin. Both positive and negative edges will cause an interrupt.

D_EXI D_ch Extended Interrupt
This bit indicates that at least one interrupt bit has been set in D_EXIR register.

B1_EXI B1_ch Extended Interrupt
This bit indicates that at least one interrupt bit has been set in B1_EXIR register.

Downloaded from Elcodis.com electronic components distributor

B2_EXI B2_ch Extended Interrupt
This bit indicates that at least one interrupt bit has been set in B2_EXIR register.

Note : A read of the ISTA register clears all bits except D_EXI, B1_EXI and B2_EXI bits. D_EXI bit is cleared when all bits in D_EXIR register are cleared. B1_EXI bit is cleared by reading B1_EXI register and B2_EXI bit is cleared by reading B2_EXIR register.

8.1.7 Interrupt Mask Register IMASK Read/Write Address 06H

Value after reset: FFH

7	6	5	4	3	2	1	0
D_RMR	D_RME	D_XFR	XINT1	XINT0	D_EXI	B1_EXI	B2_EXI

Setting the bit to "1" masks the corresponding interrupt source in ISTA register. Masked interrupt status bits are read as zero. They are internally stored and pending until the mask bits are zero.

Setting the D_EXI, B1_EXI or B2_EXI bit to "1" masks all the interrupts in D_EXIR, B1_EXIR or B2_EXIR register, respectively.

8.1.8 D_ch Extended Interrupt Register D_EXIR Read_clear Address 07H

Value after reset: 00H

7	6	5	4	3	2	1	0
RDOV	XDUN	XCOL	TIN2	GCI	ISC	T1EXP	0

RDOV Receive Data Overflow
Frame overflow (too many short frames) or data overflow occurs in the receive FIFO. In data overflow, the incoming data will overwrite the data in the receive FIFO. If RDOV interrupt occurs, software has to reset the receiver and discard the data received.

XDUN Transmit Data Underrun
This interrupt indicates the D_XFIFO has run out of data. In this case, the W66910 will automatically reset the transmitter and send the inter frame time fill pattern (all 1's) on D channel. The microprocessor must wait until transmit FIFO ready (via XFR interrupt), re-write data, and issue XMS command to re-transmit the data.

XCOL Transmit Collision
This bit indicates a collision on the S-bus has been detected. W66910 will automatically reset the transmitter and software must wait until transmit FIFO ready (via XFR interrupt), re-write data, and issue XMS command to re-transmit the data.

TIN2 Timer 2 Expiration
This bit is set when Timer 2 counts down to zero.

GCI GCI Interrupt

Downloaded from Elcodis.com electronic components distributor

This bit is set when at least one bit is set in GCI_EXIR register.

ISC Indication or S Channel Change

A change in the layer 1 indication code or multiframe S channel has been detected. The actual value can be read from CIR or SQR registers.

T1EXP Timer 1 Expiration

Expiration occurs in the Timer 1.

8.1.9 D_ch Extended Interrupt Mask Register D_EXIM Read/Write Address 08H

Value after reset: FFH

7	6	5	4	3	2	1	0
RDOV	XDUN	XCOL	TIN2	GCI	ISC	T1EXP	1

Setting the bit to "1" masks the corresponding interrupt source in D_EXIR register. Masked interrupt status bits are read as zero. They are internally stored and pending until the mask bits are zero.

All the interrupts in D_EXIR will be masked if the IMASK:D_EXI bit is set to "1".

8.1.10 D_ch Transmit Status Register D_XSTA Read Address 09H

Value after reset: 00H

7	6	5	4	3	2	1	0
XDOW	0	XBZ	DRDY	0	0	0	0

XDOW Transmit Data Overwritten

At least one byte of data has been overwritten in the D_XFIFO. This bit is set by data overwritten condition and is cleared only by XRST command.

XBZ Transmitter Busy

This bit indicates the D_HDLC transmitter is busy. The XBZ bit is active from the transmission of opening flag to the transmission of closing flag.

DRDY D Channel Ready

This bit indicates the status of layer 1 D channel.

0: The layer 1 D channel is not ready. No transmission is allowed.

1: The layer 1 D channel is ready. Layer 2 can transmit data to layer 1.

Note : Due to design mistake, DRDY=1 does not mean S/T layer 1 is in F7 state. Software has to check “DRDY=1 and C/I

Downloaded from Elcodis.com electronic components distributor

8.1.11 D_ch Receive Status Register D_RSTA Read Address 0AH

Value after reset: 20H

7	6	5	4	3	2	1	0
0	RDOV	CRCE	RMB	0	0	0	0

RDOV Receive Data Overflow

A "1" indicates that the D_RFIFO is overflow. The incoming data will overwrite data in the receive FIFO. The data overflow condition will set both the status and interrupt bits. It is recommended that software must read the RDOV bit after reading data from D_RFIFO at RMR or RME interrupt. The software must abort the data and issue a RRST command to reset the receiver if RDOV = 1. The frame overflow condition will not set this bit.

CRCE CRC Error

This bit indicates the result of frame CRC check:

0: CRC correct

1: CRC error

RMB Receive Message Aborted

A "1" means that a sequence of seven 1's was received and the frame is aborted. Software must issue RRST command to reset the receiver.

Note: Normally D_RSTA register should be read by the microprocessor after a D_RME interrupt. The contents of D_RSTA are valid only after a D_RME interrupt and remain valid until the frame is acknowledged via a RACK bit.

8.1.12D_ch SAPI Address Mask D_SAM Read/Write Address 0BH

Value after reset: 00H

7	6	5	4	3	2	1	0
SAM7	SAM6	SAM5	SAM4	SAM3	SAM2	SAM1	SAM0

This register masks(disables) the first byte address comparison of the incoming frame. If the mask bit is "1" the corresponding bit comparisons with D_SAP1, D_SAP2 are disabled. Comparison with SAPG is always performed.

Note : For the LAPD frame, the least significant two bits are the C/R bit and EA =0 bit. It is suggested that the comparison with C/R bit be masked. EA=0 for two octet address frame e.g LAPD, EA=1 for one octet address frame.

8.1.13 D_ch SAPI1 Register D_SAP1 Read/Write Address 0CH

Value after reset: 00H

7	6	5	4	3	2	1	0
SA17	SA16	SA15	SA14	SA13	SA12	SA11	SA10

Downloaded from Elcodis.com electronic components distributor

This register contains the first choice of the first byte address of received frame. For LAPD frame, SA17 - SA12 is the SAPI value, SA11 is C/R bit and SA10 is zero.

8.1.14 D_ch SAPI2 Register D_SAP2 Read/Write Address 0DH

Value after reset: 00H

7	6	5	4	3	2	1	0
SA27	SA26	SA25	SA24	SA23	SA22	SA21	SA20

This register contains the second choice of the first byte address of received frame. For LAPD frame, SA27 - SA22 is the SAPI value, SA21 is C/R bit and SA20 is zero.

8.1.15 D_ch TEI Address Mask D_TAM Read/Write Address 0EH

Value after reset: 00H

7	6	5	4	3	2	1	0
TAM7	TAM6	TAM5	TAM4	TAM3	TAM2	TAM1	TAM0

This register masks (disables) the second byte address comparison of the incoming frame. If the mask bit is "1" the corresponding bit comparisons with D_TEI1, D_TEI2 are disabled. Comparison with TEIG is always performed.

Note : For the LAPD frame, the least significant bit is the EA =1 bit.

8.1.16 D_ch TEI1 Register D_TEI1 Read/Write Address 0FH

Value after reset: 00H

7	6	5	4	3	2	1	0
TA17	TA16	TA15	TA14	TA13	TA12	TA11	TA10

TA17 - TA10
This register contains the first choice of the second byte address of received frame. For LAPD frame, TA17 - TA11 is the TEI value, TA10 is EA = 1.

8.1.17 D_ch TEI2 Register D_TEI2 Read/Write Address 10H

Value after reset: 00H

7	6	5	4	3	2	1	0

Downloaded from Elcodis.com electronic components distributor

TA27	**TA26**	**TA25**	**TA24**	**TA23**	**TA22**	**TA21**	**TA20**

TA27 - TA20
This register contains the second choice of the second byte address of received frame. For LAPD frame, TA27 - TA21 is the TEI value, TA20 is EA = 1.

8.1.18 D_ch Receive Frame Byte Count High D_RBCH Read Address 11H

Value after reset: 40H

7	6	5	4	3	2	1	0
VN1	**VN0**	**LOV**	**RBC12**	**RBC11**	**RBC10**	**RBC9**	**RBC8**

VN1-0 Chip Version Number
This is the chip version number. It is read as 01B.

LOV Length Overflow
A "1" in this bit indicates ≥ 8192 bytes are received and the frame is not yet complete. This bit is valid only after an D_RME interrupt and remains valid until the frame is acknowledge via the RACK command.

RBC12-8 Receive Byte Count
Four most significant bits of the total frame length. These bits are valid only after an D_RME interrupt and remain valid until the frame is acknowledge via the RACK command.

8.1.19 D_ch Receive Frame Byte Count Low D_RBCL Read Address 12H

Value after reset: 00H

7	6	5	4	3	2	1	0
RBC7	**RBC6**	**RBC5**	**RBC4**	**RBC3**	**RBC2**	**RBC1**	**RBC0**

RBC7-0 Receive Byte Count
Eight least significant bits of the total frame length. Bits RBC5-0 also indicate the length of the data currently available in D_RFIFO. These bits are valid only after an D_RME interrupt and remain valid until the frame is acknowledged via the RACK command.

8.1.20 Timer 2 TIMR2 Write Address 13H

Value after reset : 00H

7	6	5	4	3	2	1	0
TMD	**TIDLE**	**TCN5**	**TCN4**	**TCN3**	**TCN2**	**TCN1**	**TCN0**

Downloaded from Elcodis.com electronic components distributor

TMD Timer 2 Mode

0: One shot count down mode. The timer starts when it is written a non-zero count value and stops when it reaches zero.

1: Cyclic timer mode. The timer starts when it is written a non-zero count value and counts cyclically (periodically) with the count value.

In both cases, a maskable interrupt TIN2 is generated every time the timer reaches zero. When timer starts, pin TOUT2 changes to HIGH and toggles every half count time. Therefore, the period of TOUT2 equals count value.

In both cases, timer counts with the new value if it is written again before expiration.

The timer is stopped when it expires (TMD=0), or by writting zero count value (TMD=0 or 1).

TIDLE TOUT2 Idle

This bit defines value of TOUT2 pin when timer if off.

TCN5-0 Timer 2 Count Value

0: Timer is off.

1-63: Timer count value in unit of ms.

8.1.21 Layer 1_Ready Code L1_RC Read/Write Address 14H

Value after reset: 0CH

7	6	5	4	3	2	1	0
0	0	0	0	RC3	RC2	RC1	RC0

RC3-0 Ready Code

When GCI bus is being enabled, these four programmable bits are allowed to program different Layer 1_Ready Code (AI: Activation Indication) by user. For example: Siemens PEB2091: AI=1100, Motorola MC145572: AI=1100.

8.1.22 Control Register CTL Read/Write Address 15H

Value after reset : 00H

7	6	5	4	3	2	1	0
0	0	SRST	0	0	0	OPS1	OPS0

SRST Software Reset

When this bit is set to "1", a software reset signal is activated. The effects of this reset signal are equivalent to the hardware reset pin , except that it does not affect the 8-bit microprocessor interface circuit. Register can be read/written when SRST=1.

This bit is not auto-clear, the software must write "0" to this bit to exit from the reset mode.

Downloaded from Elcodis.com electronic components distributor

Note: When SRST = 1, the chip is in reset state. Read or write to any of the registers except SRST bit is inhibited at this time.

OPS1-0 Output Phase Delay Compensation Select1-0

These two bits select the output phase delay compensation.

OPS1	OPS0	Effect
0	0	No output phase delay compensation
0	1	Output phase delay compensation 260ns
1	0	Output phase delay compensation 520 ns
1	1	Output phase delay compensation 1040 ns

8.1.23 Command/Indication Receive Register CIR Read Address 58H/16H

Value after reset: 0FH

7	6	5	4	3	2	1	0
SCC	**ICC**			**CODR3**	**CODR2**	**CODR1**	**CODR0**

SCC S Channel Change

A change in the received 4-bit S channel has been detected. The new code can be read from the SQR register. This bit is cleared via a read of the SQR register.

ICC Indication Code Change

A change in the received indication code has been detected. The new code can be read from the CIR register. This bit is cleared by a read of the CIR register.

CODR3-0 Layer 1 Indication Code

Value of the received layer 1 indication code. Note these bits have a buffer size of two.

Note : If S/T layer 1 function is disabled and GCI slave mode is enabled (GMODE = 1 in GCR register), CIR register is used to receive layer 1 indication code from U transceiver. In this case, SCC bit is not used and the supported indication codes are :

Indication	Symbol	Code	Descriptions
Deactivation confirmation	DC	1111	Idle code on GCI interface
Power up indication	PU	0111	U transceiver power up

8.1.24 Command/Indication Transmit Register CIX Read/Write Address 17H

Value after reset: 0FH

Downloaded from Elcodis.com electronic components distributor

7	6	5	4	3	2	1	0
				CODX3	CODX2	CODX1	CODX0

CODX3-0 Layer 1 Command Code
Value of the command code transmitted to layer 1.

A read to this register returns the previous written value.

Note: If S/T layer 1 function is disabled and GCI slave mode is enabled (GMODE = 1 in GCR register), CIX register is used to issue layer 1 command code to U transceiver. In this case, the supported command code is:

Command	Symbol	Code	Descriptions
Activate request command	AR	1000	Activate request command

8.1.25 S/Q Channel Receive Register SQR Read Address 18H

Value after reset: XXH

7	6	5	4	3	2	1	0
XIND1	XIND0	MSYN	SCIE	S1	S2	S3	S4

XIND1 XINTIN1 Data
This bit reflects the current level of XINTIN1 pin.

XIND0 XINTIN0 Data
This bit reflects the current level of XINTIN0 pin.

MSYN Multiframe Synchronization
When this bit is "1", a multiframe synchronization is achived, i.e the S/T receiver has synchronized to the received F_A and M bit patterns.

SCIES Channel Change Interrupt Enable
The SCIE bit written in the SQX register is read from this bit.

S1-4 Received S Bits
These are the S bits received in NT to TE direction in frames 1, 6, 11 and 16. S1 is in frame 1, S2 is in frame 6 etc. This four bits are double buffered.

8.1.26 S/Q Channel Transmit Register SQX Read/Write Address 19H

Value after reset: 0FH

Downloaded from Elcodis.com electronic components distributor

7	6	5	4	3	2	1	0
0	0	0	SCIE	Q1	Q2	Q3	Q4

SCIE S Channel Change Interrupt Enable

This bit is used to enable/disable the generation of CIR:SCC status bit and interrupt.

0 : Status bit and interrupt are disabled.

1 : Status bit and interrupt are enabled.

Q1-4 Transmitted Q Bits

These are the transmitted Q channels in F_A bit positions in frames 1, 6, 11 and 16. Q1 is in frame 1 and Q2 is in frame 6 etc.

A read to this register returns the previous written value.

8.1.27 Peripheral Control Register PCTL Read/Write Address 1AH

Value after reset: 00H

7	6	5	4	3	2	1	0
OE5	OE4	OE3	OE2	OE1	OE0	0	PXC

OE5 Direction Control for IO10

Used when XMODE=0 only.

0: Pin IO10's output driver is disabled.

1: Pin IO10's output driver is enabled.

OE4 Direction Control for IO9-8

Used when XMODE=0 only.

0: Pin IO9-8's output drivers are disabled.

1: Pin IO9-8's output drivers are enabled.

OE3 Direction Control for IO7-6

Used when XMODE=0 only.

0: Pin IO7-6's output drivers are disabled.

1: Pin IO7-6's output drivers are enabled.

OE2 Direction Control for IO5-4

Used when XMODE=0 only.

0 : Pin IO5-4's output drivers are disabled.

1 : Pin IO5-4's output drivers are enabled.

OE1 Direction Control for IO3-2

Used when XMODE=0 only.

0 : Pin IO3-2's output drivers are disabled.

1 : Pin IO3-2's output drivers are enabled.

Downloaded from Elcodis.com electronic components distributor

OE0 Direction Control for IO1-0

Used when XMODE=0 only.

0 : Pin IO1-0's output drivers are disabled.

1 : Pin IO1-0's output drivers are enabled.

PXC PCM Cross-connect

This bit determines whether or not the PCM ports are cross-connected with the B channel ports. The setting of PXC is independent of the BSW1-0 bits. See section 7.4 for details.

PXC	Connection
0	PCM1 ↔ B1, PCM2 ↔ B2
1	PCM1 ↔ B2, PCM2 ↔ B1

8.1.28 Monitor Receive Channel 0 MO0R Read Address 1BH

Value after reset: FFH

7	6	5	4	3	2	1	0

Contains the Monitor channel data received in GCI Monitor channel 0 according to the Monitor channel protocol.

8.1.29 Monitor Transmit Channel 0 MO0X Read/Write Address 1CH

Value after reset: FFH

7	6	5	4	3	2	1	0

Contains the Monitor channel data transmitted in GCI Monitor channel 0 according to the Monitor channel protocol.

8.1.30 Monitor Channel 0 Interrupt Register MO0I Read_clear Address 1DH

Value after reset: 00H

7	6	5	4	3	2	1	0
				MDR0	MER0	MDA0	MAB0

Downloaded from Elcodis.com electronic components distributor

MDR0 Monitor channel 0 Data Receive
MER0 Monitor channel0 End of Reception
MDA0 Monitor channel0 Data Acknowledged
The remote end has acknowledged the Monitor byte being transmitted.
MAB0 Monitor channel0 Data Abort

8.1.31 Monitor Channel 0 Control Register MO0C Read/Write Address 1EH

Value after reset: 00H

7	6	5	4	3	2	1	0
0	0	0	0	MRIE0	MRC0	MXIE0	MXC0

MRIE0 Monitor Channel 0 Receive Interrupt Enable
Monitor channel interrupt status MDR0, MER0 generation is enabled (1) or masked (0).

MRC0 MR Bit Control
Determines the value of the MR bit:
0: MR bit always 1. In addition, the MDR0 interrupt is blocked, except for the first byte of a packet (if MRIE0=1).
1: MR internally controlled by the W66910 according to Monitor channel protocol. In addition, the MDR0 interrupt is enabled for all received bytes according to the Monitor channel protocol (if MRIE0=1).

MXIE0 Monitor channel 0 Transmit Interrupt Enable
Monitor interrupt status MDA0, MAB0 generation is enabled (1) or masked (0).

MXC0 MX bit Control
Determines the value of the MX bit:
0: MX always 1.
1: MX internally controlled by the W66910 according to Monitor channel protocol.

8.1.32 GCI Mode Control/Status Register GCR Read/Write Address 1FH

Value after reset: 00H

7	6	5	4	3	2	1	0
MAC0	MAC1	GACT	TLP	GRLP	SPU	PD	GMODE

MAC0 Monitor Transmit Channel 0 Active (Read Only)
Data transmission is in progress in GCI mode Monitor channel 0.
0: the previous transmission has been terminated. Before starting a transmission, the microprocessor should verify that the transmitter is inactive.
1: after having written data into the Monitor Transmit Channel 0 (MO0X) register, the microprocessor sets this bit to 1. This enables the MX bit to go active (0), indicating the presence of valid Monitor channel data (contents of MOX) in the correspond frame.

Downloaded from Elcodis.com electronic components distributor

MAC1 Monitor Transmit Channel 1 Active (Read Only)
Data transmission is in progress in GCI mode Monitor channel 1.
0: the previous transmission has been terminated. Before starting a transmission, the microprocessor should verify that the transmitter is inactive.
1: after having written data into the Monitor Transmit Channel 1 (MO1X) register, the microprocessor sets this bit to 1. This enables the MX bit to go active (0), indicating the presence of valid Monitor channel data (contents of MOX) in the correspond frame.

GACT GCI Switching Active
Determines which CODEC interface is to be activated in B channle switching. Valid only in GCI master mode. In GCI slave mode, PCM ports are always enabled.
0: PCM port is used.
1: GCI bus is used.

TLP Test Loop
When this bit is set to 1 both the DU and DD lines are internally connected together. External input on DD is ignored. Valid in GCI slave mode.

GRLP GCI Mode Remote Loop-back
Setting this bit to 1 activates the remote loop-back function. The 2B+D channels data received from the GCI bus (DD) interface are looped to the transmitted channels (DU). Valid in GCI slave mode.

SPU Software Power Up
PD Power Down

SPU	PD	Description
0	1	After U transceiver power down, W66910 will receive the indication DC (Deactivation Confirmation) from GCI bus and then software has to set SPU → 0, PD →1 to acknowledge U transceiver, by pulling DU pin to HIGH. W66910 remains normal operation.
1	0	Setting SPU → 1, PD →0 will pull the GCI bus DU line to low. This will enforce connected layer 1 devices (U transceiver) to deliver GCI bus clocking.
0	0	After reception of the indication PU (Power Up indication) the reaction of the microprocessor should be: - To write an AR (Activate Request command) as C/I command code in the CIX register. - To reset the SPU bit and wait for the following ICC (indication code change) interrupt.
1	1	Unused.

GMODE GCI Mode.
0: Layer 1 is S/T interface; GCI is in master mode. This is default setting.
1: Layer 1 is U interface; GCI is in slave mode.

8.1.33 Peripheral Data Register 1 XDATA1 Read/Write Address 3DH

Value after reset: Undefined

Downloaded from Elcodis.com electronic components distributor

7	6	5	4	3	2	1	0
IO7	IO6	IO5	IO4	IO3	IO2	IO1	IO0

IO1-0 Read or Write Data of Pins IO1-0
On read operation, these are the present values of pins IO1-0.
On write operation, the data are driven to pins IO1-0 only if PCTL:OE0=1.

IO3-2 Read or Write Data of Pins IO3-2
On read operation, these are the present values of pins IO3-2.
On write operation, the data are driven to pins IO3-2 only if PCTL:OE1=1.

IO5-4 Read or Write Data of Pins IO5-4
On read operation, these are the present values of pins IO5-4.
On write operation, the data are driven to pins IO5-4 only if PCTL:OE2=1.

IO7-6 Read or Write Data of Pins IO7-6
On read operation, these are the present values of pins IO7-6.
On write operation, the data are driven to pins IO7-6 only if PCTL:OE3=1.

8.1.34 Peripheral Data Register 2 XDATA2 Read/Write Address 3EH

Value after reset: Undefined

7	6	5	4	3	2	1	0
					IO10	IO9	IO8

IO9-8 Read or Write Data of Pins IO9-8
Input data of pins IO9-8 if PCTL:OE4=0.
Output data of pins IO9-8 if PCTL:OE4=1.

IO10 Read or Write Data of Pins IO10
Input data of pins IO10 if PCTL:OE5=0.
Output data of pins IO10 if PCTL:OE5=1.

8.1.35 Monitor Receive Channel 1 Register MO1R Read Address 40H

Value after reset: FFH

7	6	5	4	3	2	1	0

Downloaded from Elcodis.com electronic components distributor

Contains the Monitor channel data received in GCI Monitor channel 1 according to the Monitor channel protocol.

8.1.36 Monitor Transmit Channel 1 Register MO1X Read/Write Address 41H

Value after reset: FFH

7	6	5	4	3	2	1	0

Contains the Monitor channel data transmitted in GCI Monitor channel 1 according to the Monitor channel protocol.

8.1.37 Monitor Channel 1 Interrupt Register MO1IRead_clear Address 42H

Value after reset: 00H

7	6	5	4	3	2	1	0
				MDR1	**MER1**	**MDA1**	**MAB1**

MDR1 Monitor channel 1 Data Receive
MER1 Monitor channel 1 End of Reception
MDA1 Monitor channel 1 Data Acknowledged
The remote end has acknowledged the Monitor byte being transmitted.
MAB1 Monitor channel 1 Data Abort

8.1.38 Monitor Channel 1 Control Register MO1C Read/Write Address 43H

Value after reset: 00H

7	6	5	4	3	2	1	0
0	**0**	**0**	**0**	**MRIE1**	**MRC1**	**MXIE1**	**MXC1**

MRIE1 Monitor Channel 1 Receive Interrupt Enable
Monitor channel interrupt status MDR1, MER1 generation is enabled (1) or masked (0).

MRC1 MR Bit Control
Determines the value of the MR bit:
0: MR bit always 1. In addition, the MDR1 interrupt is blocked, except for the first byte of a packet (if MRIE1=1).
1: MR internally controlled by the W66910 according to Monitor channel protocol. In addition,the MDR1 interrupt is enabled for all received bytes according to the Monitor channel protocol (if MRIE1=1).

Downloaded from Elcodis.com electronic components distributor

MXIE1 Monitor channel 1 Transmit Interrupt Enable
Monitor interrupt status MDA1, MAB1 generation is enabled (1) or masked (0).

MXC1 MX bit Control
Determines the value of the MX bit:
0: MX always 1.
1: MX internally controlled by the W66910 according to Monitor channel protocol.

8.1.39 GCI IC1 Receive Register IC1R Read Address 44H

Value after reset: Undifined

7	6	5	4	3	2	1	0

Bit 7-0
Receive data of GCI IC1 channel.

8.1.40 GCI IC1 Transmit Register IC1X Read/Write Address 45H

Value after reset: FFH

7	6	5	4	3	2	1	0

Bit 7-0
Transmit data of GCI IC1 channel.A read to this register returns the previously written value.

8.1.41 GCI IC2 Receive Register IC2R Read Address 46H

Value after reset: Undefined

7	6	5	4	3	2	1	0

Bit 7-0
Receive data of GCI IC2 channel.

8.1.42 GCI IC2 Transmit Register IC2X Read/Write Address 47H

Value after reset: FFH

Downloaded from Elcodis.com electronic components distributor

7	6	5	4	3	2	1	0

Bit 7-0
Transmit data of GCI IC2 channel.A read to this register returns the previously written value.

8.1.43 GCI CI1 Indication Register CI1R Read Address 48H

Value after reset : Undefined

7	6	5	4	3	2	1	0
		CI1R_6	CI1R_5	CI1R_4	CI1R_3	CI1R_2	CI1R_1

CI1R_6-1
Input data of GCI CI1 channel.
Example application is data of ARCOFI's Peripheral Control Interface input pins.

8.1.44 GCI CI1 Command Register CI1X Read/Write Address 49H

Value after reset: 3FH

7	6	5	4	3	2	1	0
0	0	CI1X_6	CI1X_5	CI1X_4	CI1X_3	CI1X_2	CI1X_1

CI1X6_1
Transmitted data of GCI CI1 channel.A read to these bits returns the previously written value.
Example application is data of ARCOFI's Peripheral Control Interface output pins.

8.1.45 GCI Extended Interrupt Register GCI_EXIR Read_clear Address 4AH

Value after reset : 00H

7	6	5	4	3	2	1	0
0	0	0	MO1C	MO0C	IC1	IC2	CI1

MO1C Monitor Channel 1 Status Change
A change in the Monitor Channel 1 Interrupt register (MO1I) has occurred. A new Monitor channel byte is stored in the MO1R register.

MO0C Monitor Channel 0 Status Change
A change in the Monitor Channel 0 Interrupt register (MO0I) has occurred. A new Monitor channel byte is stored in the MO0R register.

IC1 IC1 Synchronous Transfer Interrupt
When enabled, an interrupt is generated at end of GCI IC1 time slot every GCI frame (125 µs).

Downloaded from Elcodis.com electronic components distributor

IC2 IC2 Synchronous Transfer Interrupt
When enabled, an interrupt is generated at end of GCI IC2 time slot every GCI frame (125 µs).

CI1 GCI CI1 Synchronous Transfer Interrupt
When enabled, an interrupt is generated when there is a change in the received CIR1_6-1 code without double last look criterion.

8.1.46 GCI Extended Interrupt Mask Register GCI_EXIM Read/Write Address 4BH

Value after reset: F7H

7	6	5	4	3	2	1	0
1	1	1	MO1C	0	IC1	IC2	CI1

Bits 7-5 are fixed at "1" and bit 3 is fixed at '0". This means MO0C interrupt cannot be masked. The interrupt is disabled when the bit is set.

8.2 B1 HDLC controler

TABLE 8.3 REGISTER ADDRESS MAP: B1 CHANNEL HDLC

Section	Offset	Access	Register Name	Description
8.2.1	20	R	B1_RFIFO	B1 channel receive FIFO
8.2.2	21	W	B1_XFIFO	B1 channel transmit FIFO
8.2.3	22	R/W	B1_CMDR	B1 channel command register
8.2.4	23	R/W	B1_MODE	B1 channel mode control
8.2.5	24	R_clear	B1_EXIR	B1 channel extended interrupt
8.2.6	25	R/W	B1_EXIM	B1 channel extended interrupt mask
8.2.7	26	R	B1_STAR	B1 channel status register
8.2.8	27	R/W	B1_ADM1	B1 channel address mask 1
8.2.9	28	R/W	B1_ADM2	B1 channel address mask 2
8.2.10	29	R/W	B1_ADR1	B1 channel address 1
8.2.11	2A	R/W	B1_ADR2	B1 channel address 2
8.2.12	2B	R	B1_RBCL	B1 channel receive frame byte count low
8.2.13	2C	R	B1_RBCH	B1 channel receive frame byte count high
8.2.14	2D	R/W	B1_IDLE	B1 channel transmit idle pattern

Downloaded from Elcodis.com electronic components distributor

TABLE 8.4 REGISTER SUMMARY: B1 CHANNEL HDLC

Offset	R/W	Name	7	6	5	4	3	2	1	0
20	R	B1_RFIFO								
21	W	B1_XFIFO								
22	R/W	B1_CMDR	RACK	RRST	RACT	XACTB	B1_128K	XMS	XME	XRST
23	R/W	B1_MODE	MMS	ITF	EPCM	B1_SW1	B1_SW0	SW56	FTS1	FTS0
24	R_clr	B1_EXIR		RMR	RME	RDOV			XFR	XDUN
25	R/W	B1_EXIM		RMR	RME	RDOV			XFR	XDUN
26	R	B1_STAR		RDOV	CRCE	RMB		XDOW		XBZ
27	R/W	B1_ADM1	MA17	MA16	MA15	MA14	MA13	MA12	MA11	MA10
28	R/W	B1_ADM2	MA27	MA26	MA25	MA24	MA23	MA22	MA21	MA20
29	R/W	B1_ADR1	RA17	RA16	RA15	RA14	RA13	RA12	RA11	RA10
2A	R/W	B1_ADR2	RA27	RA26	RA25	RA24	RA23	RA22	RA21	RA20
2B	R	B1_RBCL	RBC7	RBC6	RBC5	RBC4	RBC3	RBC2	RBC1	RBC0
2C	R	B1_RBCH			LOV	RBC12	RBC11	RBC10	RBC9	RBC8
2D	R/W	B1_IDLE	IDLE7	IDLE6	IDLE5	IDLE4	IDLE3	IDLE2	IDLE1	IDLE0

8.2.1 B1_ch receive FIFO B1_RFIFO Read Address 20H

The B1_RFIFO is a 128-byte depth FIFO memory with programmable threshold. The threshold value determines when to generate an interrupt.

When more than a threshold length of data has been received, a RMR interrupt is generated. After an RMR interrupt, 64 or 96 bytes can be read out, depending on the threshold setting.

In transparent mode, when the end of frame has been received, a RME interrupt is generated. After an RME interrupt, the number of bytes available is less than or equal to the threshold value.

8.2.2 B1_ch transmit FIFO B1_XFIFO Write Address 21H

The B1_XFIFO is a 128-byte depth FIFO with programmable threshold value. The threshold setting is the same as B1_RFIFO.

Downloaded from Elcodis.com electronic components distributor

When the number of empty locations is equal to or greater than the threshold value, a XFR interrupt is generated. After a XFR interrupt, up to 64 or 96 bytes of data can be written into this FIFO for transmission.

8.2.3 B1_ch command register B1_CMDR Read/Write Address 22H

Value after reset: 00H

7	6	5	4	3	2	1	0
RACK	RRST	RACT	XACTB	B1_128K	XMS	XME	XRST

RACK Receive Message Acknowledge
After a RMR or RME interrupt, the microprocessor reads out the data in B1_RFIFO, it then sets this bit to explicitly acknowledge the interrupt.
This bit is write only. It's auto-clear.

RRST Receiver Reset
Setting this bit resets the B1_ch HDLC receiver.
This bit is write-only. It's auto-clear.

RACT Receiver Active
"1": transmitter is active, 64 kHz clock is provided.
"0": transmitter is inactive, clock is LOW to save power.
This bit is read/write. Read operation returns the previously written value.

XACTB Transmitter Active
"0": transmitter is active, 64 kHz clock is provided.
"1": transmitter is inactive, clock is LOW to save power.
This bit is read/write. Read operation returns the previously written value.

B1_128K 128K Mode
"1": Both B1 and B2 channels in layer 1 are combined into single layer 2 channel. The layer 2 B1 channel can operates in transparent mode or extended transparent mode and layer 2 B2 channel is not used.
"0": Both B1 and B2 channels in layer 1 are not combined.
This bit is read/write. Read operation returns the previously written value.

XMS Transmit Message Start/Continue
In transparent mode, setting this bit initiates the transparent transmission of B1_XFIFO data. The opening flag is automatically added to the message by the B1_ch HDLC controller. Zero bit insertion is performed on the data. This bit is also used in subsequent transmission of the frame.
In extended transparent mode, settint this bit activates the transmission of B1_XFIFO data. No flag, CRC or zero bit insertion is added on the data.
This bit is write-only. It's auto-clear.

Downloaded from Elcodis.com electronic components distributor

XME Transmit Message End

In transparent mode, setting this bit indicates the end of the whole frame transmission. The B1_ch HDLC controller transmits the data in FIFO and automatically appends the CRC and the closing flag sequence in transparent mode.
In extended transparent mode, setting this bit stops the B1_XFIFO data transmission.
This bit is write-only. It's auto-clear.

XRST Transmitter Reset

Setting this bit resets the B1_ch HDLC transmitter and clears the B1_XFIFO. The transmitter will send inter frame time fill pattern on B channel in transparent mode, or idle pattern in extended transparent mode. This command also results in a transmit FIFO ready condition.
This bit is write only. It's auto-clear.

8.2.4 B1_ch Mode Register B1_MODE Read/Write Address 23H

Value after reset: 00H

7	6	5	4	3	2	1	0
MMS	ITF	EPCM	B1_SW1	B1_SW0	SW56	FTS1	FTS0

MMS Message Mode Setting

Determines the message transfer modes of the B1_ch HDLC controller:
0: Transparent mode. In receive direction, address comparison is performed on each frame. The frames with matched address are stored in B1_RFIFO. Flag deletion, CRC check and zero bit deletion are performed. In transmit direction, the data is transmitted with flag insertion, zero bit insertion and CRC generation.
1: Extended transparent mode. In receive direction, all data are received and stored in the B1_RFIFO. In transmit direction, all data in the B1_XFIFO are transmitted without alteration.

ITF Inter-frame Time Fill

Defines the inter-frame time fill pattern in transparent mode.
0 : Mark. The binary value "1" is transmitted.
1 : Flag. This is a sequence of"01111110".

EPCM Enable PCM Transmit/Receive

0 : Disable data transmit/ receive to/from PCM port. The frame synchronization clock PFCK1 is held LOW.
1 : Enable data transmit/ receive to/from PCM port. The frame synchronization clock PFCK1 is active.

B1_SW1-0 B Channel Switching Select

These two bits, along with PXC bit in PCTL register, determine the connection in B1 channel. See section 7.4 for details.

Note: The connection with microprocessor is through HDLC controller. When HDLC connects with layer 1, either transparent or extended transparent mode can be used. When HDLC connects with PCM port/GCI bus, only extended transparent mode can be used and the EPCM bit must be set to enable PCM function.

SW56 Switch 56 Traffic

Downloaded from Elcodis.com electronic components distributor

0: The data rate in B1 channel is 64 kbps.

1: The data rate in B1 channel is 56 kbps. The most significant bit in each octet is fixed at"1".

Note: In 56 kbps mode, only transparent mode can be used.

FTS1-0 FIFO Threshold Select

These two bits determine the B1 channel receive and transmit FIFO's threshold setting. An interrupt is generated when the number of received data or the number of vacancies in XFIFO reaches the threshold value.

FTS1	FTS0	Threshold (byte)
0	0	64
0	1	Reserved
1	0	96
1	1	Not allowed

8.2.5 B1_ch Extended Interrupt Register B1_EXIR Read_clear Address 24H

Value after reset: 00H

7	6	5	4	3	2	1	0
	RMR	RME	RDOV			XFR	XDUN

RMR Receive Message Ready

At least athreshold lenth of data has been stored in the B1_RFIFO.

RME Receive Message End

Used in transparent mode only. The last block of a frame has been received. The frame length can be found in B1_RBCH + B1_RBCL registers. The number of data available in the B1_RFIFO equals frame lenth modulus threshold. The result of CRC check is indicated by B1_STAR:CRCE bit.

When the number of last block of a frame equals the threshold, only RME interrupt is generated.

RDOV Receive Data Overflow

Data overflow occurs in the receive FIFO. The incoming data will overwrite the data in the receive FIFO.

XFR Transmit FIFO Ready

This interrupt indicates that up to a threshold length of data can be written into the B1_XFIFO.

XDUN Transmit Data Underrun

This interrupt occurs when the B1_XFIFO has run out of data. In this case, the W66910 will automatically reset the transmitter and send the inter frame time fill pattern on B channel. The software must wait until transmit FIFO ready condition (via XFR interrupt), re-write data, and issue XMS command to re-transmit the data.

Downloaded from Elcodis.com electronic components distributor

8.2.6 B1_ch Extended Interrupt Mask Register B1_EXIM Read/Write Address 25H

Value after reset: FFH

7	6	5	4	3	2	1	0
	RMR	RME	RDOV			XFR	XDUN

Setting the bit to "1" masks the corresponding interrupt source in B1_EXIR register. Masked interrupt status bits are read as zero when B1_EXIR register is read. They are internally stored and pending until the mask bits are zero.

All the interrupts in B1_EXIR will be masked if the IMASK : B1_EXI bit is set to "1".

8.2.7 B1_ch Status Register B1_STAR Read Address 26H

Value after reset: 20H

7	6	5	4	3	2	1	0
	RDOV	CRCE	RMB		XDOW		XBZ

RDOV Receive Data Overflow

A "1" indicates that the receive FIFO is overflow. The incoming data overwrote data in the receive FIFO. The overflow condition will set both the status and interrupt bits. It is recommended that software must read the RDOV bit after reading data from receive FIFO at RMR or RME interrupt. The software must abort the data and issue a RRST command to reset the receiver if RDOV=1.

CRCE CRC Error

Used in transparent mode only. This bit indicates the result of frame CRC check:

0 : CRC correct

1 : CRC incorrect

RMB Receive Message Aborted

Used in transparent mode only. A "1" means that a sequence of ≥seven 1's was received and the frame is aborted by the B1_HDLC controller. Software must issue RRST command to reset the receiver.

Note : Bit CRCE is valid only after a RME interrupt and remains valid until the frame is acknowledged via RACK command. RMB must be polled after a RMR/RME interrupt.

XDOW Transmit Data Overwritten

At least one byte of data has been overwritten in the B1_XFIFO.This bit is cleared only by XRST command.

XBZ Transmitter Busy

The B1_HDLC transmitter is busy when XBZ is read as "1". This bit may be polled. The XBZ bit is active when an XMS command was issued and the message has not been completely transmitted.

Downloaded from Elcodis.com electronic components distributor

8.2.8 B1_ch Address Mask Register 1 B1_ADM1 Read/Write Address 27H

Value after reset: 00H

7	6	5	4	3	2	1	0
MA17	MA16	MA15	MA14	MA13	MA12	MA11	MA10

MA17-10 Address Mask Bits

Used in transparent mode only. These bits mask the first byte address comparisons. If the mask bit is "1", the corresponding bit comparison with B1_ADR1 is disabled.

0: Unmask comparison

1: Mask comparison

8.2.9 B1_ch Address Mask Register 2 B1_ADM2 Read/Write Address 28H

Value after reset: 00H

7	6	5	4	3	2	1	0
MA27	MA26	MA25	MA24	MA23	MA22	MA21	MA20

MA27-20 Address Mask Bits

Used in transparent mode only. These bits mask the second byte address comparisons. If the mask bit is "1", the corresponding bit comparison with B1_ADR2 is disabled.

0: Unmask comparison

1: Mask comparison

8.2.10 B1_ch Address Register 1 B1_ADR1 Read/Write Address 29H

Value after reset: 00H

7	6	5	4	3	2	1	0
RA17	RA16	RA15	RA14	RA13	RA12	RA11	RA10

RA17-10 Address Bits

Used in transparent mode only. These bits are used for the first byte address comparisons.

8.2.11 B1_ch Address Register 2 B1_ADR2 Read/Write Address 2AH

Value after reset: 00H

7	6	5	4	3	2	1	0

Downloaded from Elcodis.com electronic components distributor

RA27	**RA26**	**RA25**	**RA24**	**RA23**	**RA22**	**RA21**	**RA20**

RA27-20 Address Bits
Used in transparent mode only. These bits are used for the second byte address comparisons.

8.2.12 B1_ch Receive Frame Byte Count Low B1_RBCL Read Address 2BH

Value after reset: 00H

7	6	5	4	3	2	1	0
RBC7	**RBC6**	**RBC5**	**RBC4**	**RBC3**	**RBC2**	**RBC1**	**RBC0**

RBC7-0 Receive Byte Count
Used in transparent mode only. Eight least significant bits of the total number of bytes are in a received frame. These bits are valid only after a RME interrupt and remain valid until the frame is acknowledge via the RACK bit.

8.2.13 B1_ch Receive Frame Byte Count High B1_RBCH Read Address 2CH

Value after reset: 00H

7	6	5	4	3	2	1	0
		LOV	**RBC12**	**RBC11**	**RBC10**	**RBC9**	**RBC8**

LOV Message Length Overflow
Used in transparent mode only. A "1" in this bit indicates a received message ≥ 8192 bytes. This bit is valid only after RME interrupt and is cleared by the RACK command.

RBC12-8 Receive Byte Count
Used in transparent mode only. Five most significant bits of the total number of bytes are in a received frame. These bits are valid only after a RME interrupt and remain valid until the frame is acknowledge via the RACK bit.

Note: The frame length equals RBC12-0. This length is between 1 and 8191. After a RME interrupt, the number of data available in B1_RFIFO is frame length modulus threshold.
Remainder = RBC12-0 MOD threshold
No of available data = remainderif remainder ≠ 0 or
No of available data = thresholdif remainder = 0
The remainder equals RBC5-0 if threshold is 64.

8.2.14 B1_ch Transmit Idle Pattern B1_IDLE Read/Write Address 2DH

Value after reset: FFH

Downloaded from Elcodis.com electronic components distributor

7	6	5	4	3	2	1	0
IDLE7	**IDLE6**	**IDLE5**	**IDLE4**	**IDLE3**	**IDLE2**	**IDLE1**	**IDLE0**

IDLE7-0

This pattern is transmitted when the transmitter is active and transmit FIFO is empty. Valid in extended transparent mode only.

8.3 B2 HDLC controller

TABLE 8.5 REGISTER ADDRESS MAP: B2 CHANNEL HDLC

Offset	Access	Register Name	Description
30	R	B2_RFIFO	B2 channel receive FIFO
31	W	B2_XFIFO	B2 channel transmit FIFO
32	R/W	B2_CMDR	B2 channel command register
33	R/W	B2_MODE	B2 channel mode control
34	R_clear	B2_EXIR	B2 channel extended interrupt
35	R/W	B2_EXIM	B2 channel extended interrupt mask
36	R	B2_STAR	B2 channel status register
37	R/W	B2_ADM1	B2 channel address mask 1
38	R/W	B2_ADM2	B2 channel address mask 2
39	R/W	B2_ADR1	B2 channel address 1
3A	R/W	B2_ADR2	B2 channel address 2
3B	R	B2_RBCL	B2 channel receive frame byte count low
3C	R	B2_RBCH	B2 channel receive frame byte count high
2E	R/W	B2_IDLE	B2 channel transmit idle pattern

TABLE 8.6 REGISTER SUMMARY: B2 CHANNEL HDLC

Offset	R/W	Name	7	6	5	4	3	2	1	0
30	R	B2_RFIFO								
31	W	B2_XFIFO								
32	R/W	B2_CMDR	RACK	RRST	RACT	XACTB		XMS	XME	XRST
33	R/W	B2_MODE	MMS	ITF	EPCM	B2_SW1	B2_SW0	SW56	FTS1	FTS0
34	R_clr	B2_EXIR		RMR	RME	RDOV			XFR	XDUN
35	R/W	B2_EXIM		RMR	RME	RDOV			XFR	XDUN
36	R	B2_STAR		RDOV	CRCE	RMB		XDOW		XBZ
37	R/W	B2_ADM1	MA17	MA16	MA15	MA14	MA13	MA12	MA11	MA10
38	R/W	B2_ADM2	MA27	MA26	MA25	MA24	MA23	MA22	MA21	MA20

Downloaded from Elcodis.com electronic components distributor

39	R/W	B2_ADR1	RA17	RA16	RA15	RA14	RA13	RA12	RA11	RA10
3A	R/W	B2_ADR2	RA27	RA26	RA25	RA24	RA23	RA22	RA21	RA20
3B	R	B2_RBCL	RBC7	RBC6	RBC5	RBC4	RBC3	RBC2	RBC1	RBC0
3C	R	B2_RBCH			LOV	RBC12	RBC11	RBC10	RBC9	RBC8
2E	R/W	B2_IDLE	IDLE7	IDLE6	IDLE5	IDLE4	IDLE3	IDLE2	IDLE1	IDLE0

The B2 channel HDLC register's definitions and functions are the same as those of B1 channel HDLC. Please refer to section 8.2 for a detailed description.

9. ELECTRICAL CHARACTERISTICS

9.1 Absolute Maximum Rating

Parameter	Symbol	Limit Values	Unit
Voltage on any pin with respect to ground	V_S	-0.4 to V_{DD}+0.4	V
Ambient temperature under bias	T_A	0 to 70	°C
Maximum voltage on V_{DD}	V_{DD}	6	V

9.2 Power Supply

The power supply is 5 V ± 5 %.

9.3 DC Characteristics

T_A=0 to 70 °C; V_{DD}=5 V ± 5 %, V_{SSA}=0 V, V_{SSD}=0 V

Parameter	Symbol	Min	Max	Unit	Test conditions	Remarks
Low input voltage	V_{IL}	-0.4	0.8	V		
High input voltage	V_{IH}	2.0	V_{DD} +0.4	V		
Low output voltage	V_{OL}		0.4	V	I_{OL}= 12 mA	
High output voltage	V_{OH}	2.4		V		
Analog power supply current:	I_{CC}		1.5	mA	V_{DDA}=5V, S/T layer 1 in state “F3 Deactivated without clock”	

Downloaded from Elcodis.com electronic components distributor

power down						
Analog power supply current: activated	I_{CC}		6.5	mA	V_{DD}=5V, S/T layer 1 in state "F7 Activated"	
Input leakage current	I_{LI}		10	µA	0 V < V_{IN} < V_{DD} to 0V	All pins except SX1,2, SR1,2
Output leakage current	I_{LO}		10	µA	0 V < V_{OUT} < V_{DD} to 0V	All pins except SX1,2, SR1,2
Absolute value of output pulse amplitude (V_{SX2}-V_{SX1})	V_X	2.03 2.10	2.31 2.39	V V	R_L=50 Ω [1)] R_L=400 Ω [1)]	SX1,2
Transmitter output current	I_X	7.5	13.4	mA	R_L=5.6 Ω [1)]	SX1,2
Transmitter output impedence	R_X	30 23		kΩ Ω	Inactive or during binary ONE During binary ZERO (R_L=50 Ω)	SX1,2

Note: [1)] Due to the transformer, the load resistance seen by the circuit is four times R_L.

Capacitances

T_A=25 °C, V_{DD}= 5 V ± 5 %, V_{SSA}= 0V, V_{SSD}=0V, fc=1 Mhz, unmeasured pins grounded.

Parameter	Symbol	Min.	Max.	Unit	Remarks
Input capacitance	C_{IN}		7	pF	All pins except SR1,2
I/O pin capacitance	C_{IO}		7	pF	All pins except SR1,2
Output capacitance against V_{SSA}	C_{OUT}		10	pF	SX1,2
Input capacitance	C_{IN}		7	pF	SR1,2
Load capacitance	C_L		50	pF	XTAL1,2

Recommended oscillator circuits

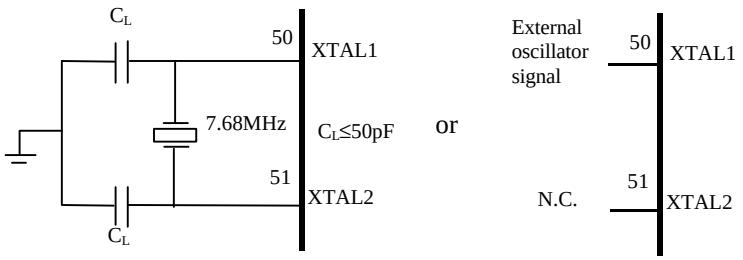

Crystal specifications

Parameter	Symbol	Values	Unit
Frequency	*f*	7.680	MHz
Frequency calibration tolerance		Max. 100	ppm
Load capacitance	C_L	Max. 50	pF
Oscillator mode		Fundamental	

Downloaded from Elcodis.com electronic components distributor

Note: The load capacitance C_L depends on the crystal specification. The typical values are 33 to 47 pF.

External ocsillator input (XTAL1) clock characteristics

Parameter	Min.	Max.
Duty cycle	1:2	2:1

9.4 Preliminary Switching Characteristics

9.4.1 PCM Interface Timing

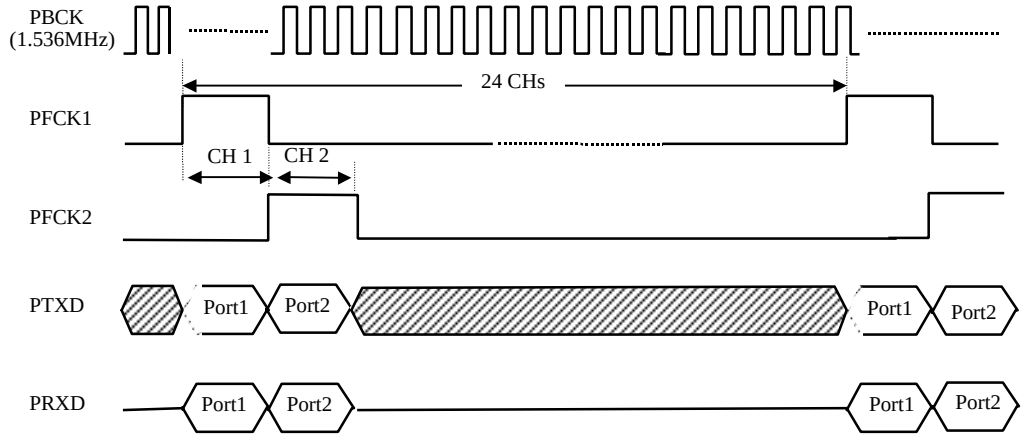

Note 1: These drawings are not to scale.
Note 2 : The frequency of PBCK is 1536 kHz which includes 24 channels of 64 kbps data. The PFCK1 and PFCK2 are located at channel 1 and channel 2, each with a 8 x PBCK duration.

Detailed PCM timing

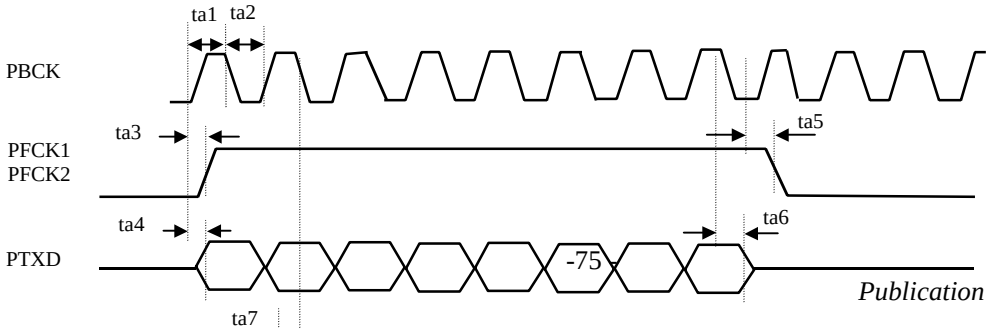

Downloaded from Elcodis.com electronic components distributor

Parameter	Parameter Descriptions	Min.	Nominal	Max.	Remarks
ta1	PBCK pulse high		325		Unit = ns
ta2	PBCK pulse low	195	325	455	
ta3	Frame clock asserted from PBCK			20	
ta4	PTXD data delay from PBCK			20	
ta5	Frame clock deasserted from PBCK			20	
ta6	PTXD hold time from PBCK	10			
ta7	PRXD setup time to PBCK	20			
ta8	PRXD hold time from PBCK	10			

Note : The PCM clocks are locked to the S/T receive clock. At every two or three PCM frame time (125 µs), PBCK and PFCK1, PFCK2 may be adjusted by one local oscillator cycle (130 ns) in order to synchronize with S/T clock. This shift is made on the LOW level time of PBCK and the HIGH level time is not affected. This introduces jitters on the PBCK, PFCK1 and PFCK2 with jitter amplitude 260 ns (peak-to-peak) and jitter frequency about 2.67~4 kHz.

9.4.2 8-bit Microprocessor Timing

Intel mode read cycle timing

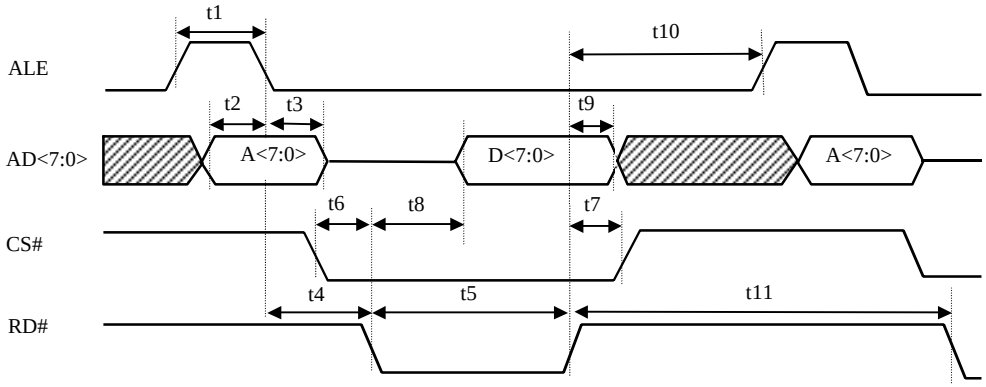

Downloaded from Elcodis.com electronic components distributor

Intel mode write cycle timing

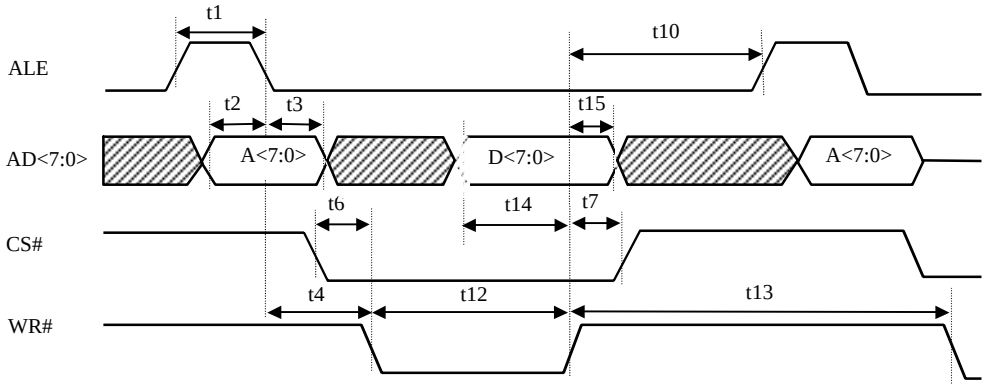

Motorola mode read cycle timing

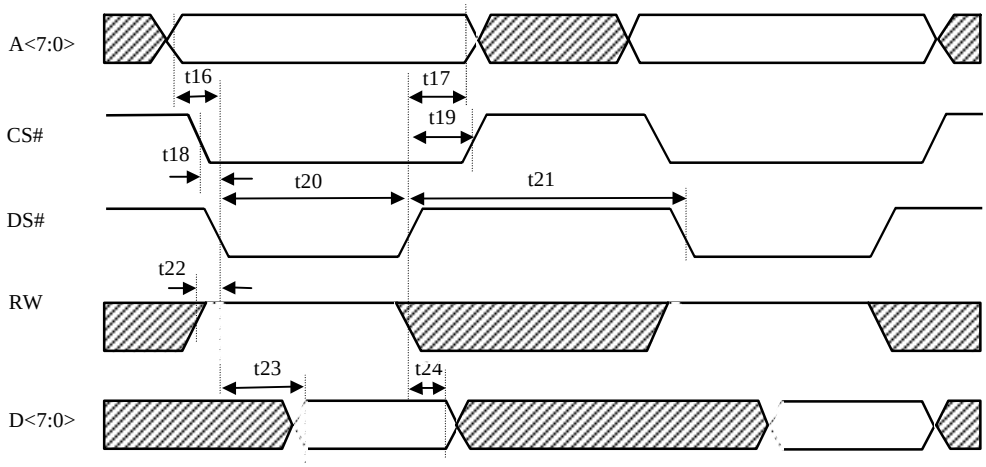

Motorola mode write cycle timing

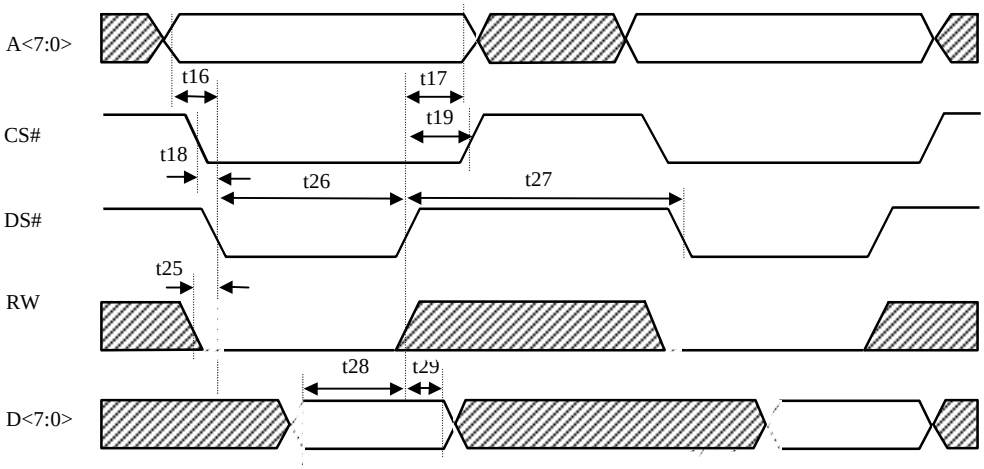

Downloaded from Elcodis.com electronic components distributor

Parameter	Parameter Descriptions	Min.	Max.	Remarks
t1	ALE pulse width	50		
t2	address setup time to ALE	15		
t3	address hold time from ALE	10		
t4	address setup time to RD#, WR#	0		
t5	RD# pulse width	110		
t6	CS# setup time to RD#, WR#	0		
t7	CS# hold time from RD#, WR#	0		
t8	data output delay from RD#		50	
t9	data float from RD#		25	
t10	ALE guard time	15		
t11	RD# recovery time	70		
t12	WR# pulse width	60		
t13	WR# recovery time	70		
t14	data setup time to WR#	35		
t15	data hold time from WR#	10		
t16	address setup time to DS#	25		
t17	address hold time from DS#	10		
t18	CS# setup time to DS#	10		
t19	CS# hold time from DS#	10		
t20	DS# read pulse width	110		
t21	DS# read recovery time	70		
t22	RW setup time to DS# read	0		
t23	data output delay from DS#		110	
t24	data hold time from DS#		25	
t25	RW setup time to DS# write	0		
t26	DS# write pulse width	60		
t27	DS# write recovery time	70		
t28	write data setup time to DS#	35		
t29	write data hold time from DS#	10		

9.5 AC Timing Test Conditions

T_A= 0 to 70 °C, V_{DD}= 5 V ± 5 %

Inputs are driven to 2.4 V for logical 1 and 0.4 V for logical 0.Measurements are made at 2.0 V for logical 1 and 0.8 V for logical 0. The AC testing input/output waveforms are shown below :

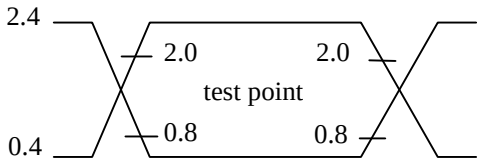

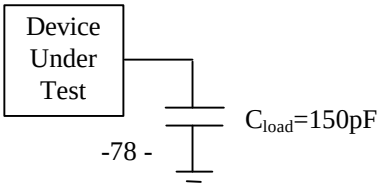

Downloaded from Elcodis.com electronic components distributor

10. ORDERING INFORMATION

Part Number	Package Type	Production Flow
W66910CD	100 Pin LQFP	Commercial, 0^0C to $+70^0$C

Downloaded from Elcodis.com electronic components distributor

11. PACKAGE SPECIFICATIONS

100PIN LQFP(14x20x1.4mm footprint 2.0mm)

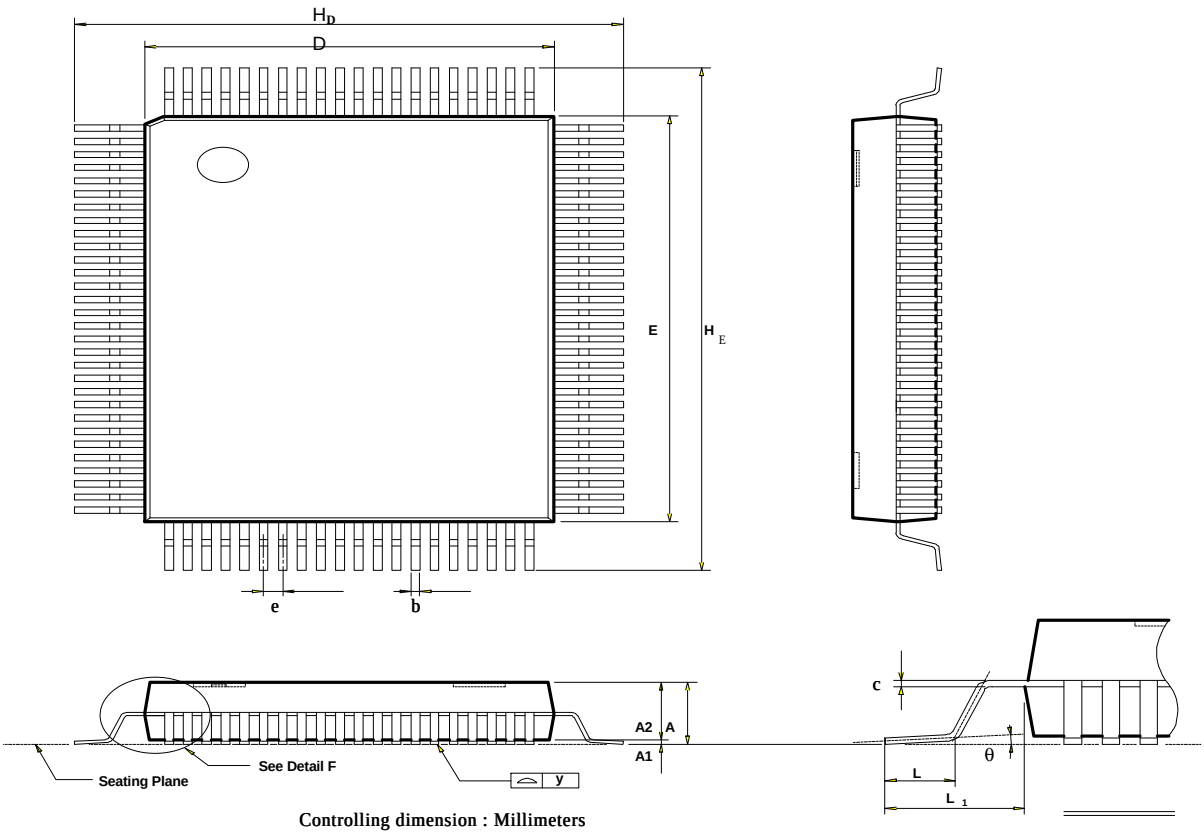

Controlling dimension : Millimeters

Symbol	Dimension in inch			Dimension in mm		
	Min	Nom	Max	Min	Nom	Max
A	—	—	—	—	—	—
A_1	0.002	0.004	0.006	0.05	0.10	0.15
A_2	0.053	0.055	0.057	1035	1.40	1.45
b	0.009	0.013	0.015	0.22	0.32	0.38
c	0.004	0.006	0.008	0.10	0.15	0.20
D	0.547	0.551	0.555	13.90	14.00	14.10
E	0.783	0.787	0.791	19.90	20.00	20.10
e	0.020	0.026	0.032	0.498	0.65	0.802
H_D	0.626	0.630	0.634	15.90	16.00	16.10
H_E	0.862	0.866	0.870	21.90	22.00	22.10
L	0.018	0.024	0.030	0.45	0.60	0.75
L_1		0.039			1.00	
y	—	—	0.003	—	—	0.08
θ	0°	—	7°	0°	—	7°

Downloaded from Elcodis.com electronic components distributor

Headquarters
No. 4, Creation Rd. III
Science-Based Industrial Park
Hsinchu, Taiwan
TEL: 886-35-770066
FAX: 886-35-789467
www: http://www.winbond.com.tw/

Taipei Office
11F, No. 115, Sec. 3, Min-Sheng East Rd.
Taipei, Taiwan
TEL: 886-2-7190505
FAX: 886-2-7197502
TLX: 16485 WINTPE

Winbond Electronics (H.K.) Ltd.
Rm. 803, World Trade Square, Tower II
123 Hoi Bun Rd., Kwun Tong
Kowloon, Hong Kong
TEL: 852-27516023-7
FAX: 852-27552064

Winbond Electronics (North America) Corp.
2730 Orchard Parkway
San Jose, CA 95134 U.S.A.
TEL: 1-408-9436666
FAX: 1-408-9436668

Note: All data and specifications are subject to change without notice.

Downloaded from Elcodis.com electronic components distributor