ACE2301

Technology **P-Channel Enhancement Mode MOSFET**

Description

The ACE2301 is the P-Channel logic enhancement mode power field effect transistor are produced using high cell density, DMOS trench technology.

This high density process is especially tailored to minimize on-state resistance.

These devices are particularly suited for low voltage application such as cellular phone and notebook computer power management and Battery powered circuits, and low in-line power loss are needed in a very small outline surface mount package.

Features

- V_{DS}=-20V
- $R_{DS(ON)}$,V_{gs}@-4.5V,I_{ds}@-2.8A=100mΩ
- $R_{DS(ON)}$,V_{gs}@-2.5V,I_{ds}@-2.0A=150mΩ
- Advanced trench process technology
- High Density Cell Design For Ultra Low On-Resistance

Absolute Maximum Ratings

Parameter		Symbol	Max	Unit
Drain-Source Voltage		V_{DS}	-20	V
Gate-Source Voltage		V_{GS}	±12	V
Continuous Drain Current		I_D	-2.2	A
Pulsed Drain Current[1)]		I_{DM}	-8	A
Maximum Power Dissipation	T_A=25℃	P_D	1.25	W
	T_A=70℃		0.8	
Operating Junction Temperature		T_J	-55 to 150	°C
Storage Temperature Range		T_{STG}	-55 to 150	°C
Junction to Ambient Thermal Resistance (PCB mounted)[2)]		$R_{\theta JA}$	140	°C/W

Note: 1.Repetitive Rating: Pulse width limited by the maximum junction temperature.

2.1-in^2 2oz Cu PCB board.

3.Guaranteed by design; not subject to production testing.

Packaging Type

SOT-23-3

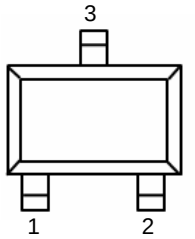

Pin	Symbol	Description
1	G	Gate
2	S	Source
3	D	Drain

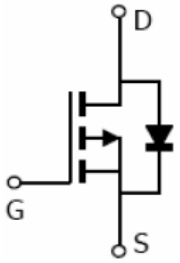

Ordering information

Selection Guide

ACE2301 XX + H

- Halogen - free
- Pb - free
- BM : SOT-23-3

Electrical Characteristics

Parameter	Symbol	Conditions	Min.	Typ.	Max.	Unit
Static						
Drain-Source Breakdown Voltage	BV_{DSS}	V_{GS}=0V, I_D=250uA	-20			V
Drain-Source On-State Resistance	$R_{DS(ON)}$	V_{GS}=-4.5V, I_D=-2.8A		70.0	100.0	mΩ
Drain-Source On-State Resistance	$R_{DS(ON)}$)	V_{GS}=-2.5V, I_D=-2.0A		85.0	150.0	
Gate Threshold Voltage	$V_{GS(th)}$	V_{DS}=VGS, I_D=250uA	-0.4		-0.9	V
Zero Gate Voltage Drain Current	I_{DSS}	V_{DS}=-9.6V, V_{GS}=0V			-1	uA
Gate Body Leakage	I_{GSS}	V_{GS}=±8V, V_{DS}=0V			±100	nA
Forward Trans conductance	G_{fs}	V_{DS}=-5V, I_D=-2.8A		6.5		S
Dynamic[3)]						
Total Gate Charge	Q_g	V_{DS}=-6V, I_D=-2.8A V_{GS}=-4.5V		5.8	10	nC
Gate-Source Charge	Q_{gs}			0.85		
Gate-Drain Charge	Q_{gd}			1.7		
Turn-On Delay Time	$T_{d(on)}$	V_{DD}=-6V,RL=6Ω I_D=-1A, V_{GEN}=-4.5V R_G=6Ω		13	25	ns
Turn-On Rise Time	T_f			36	60	
Turn-Off Delay Time	$t_{d(off)}$			42	70	
Turn-Off Fall Time	t_f			34	60	
Input Capacitance	C_{iss}	VDS=-6V, VGS=0V F=1.0MHz		415		pF
Output Capacitance	C_{oss}			223		
Reverse Transfer Capacitance	C_{rss}			87		
Source-Drain Diode						
Max. Diode Forward Current	I_S				-1.6	A
Diode Forward Voltage	V_{SD}	I_S=-1.6A,V_{GS}=0V			-1.2	V

Note: Pulse test pulse width<=300us, duty cycle<=2%.

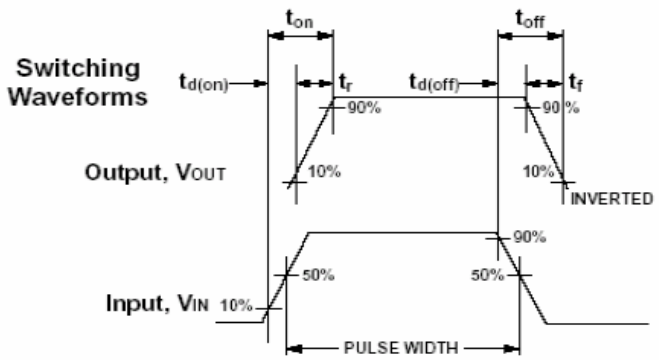

Packing Information

SOT-23-3

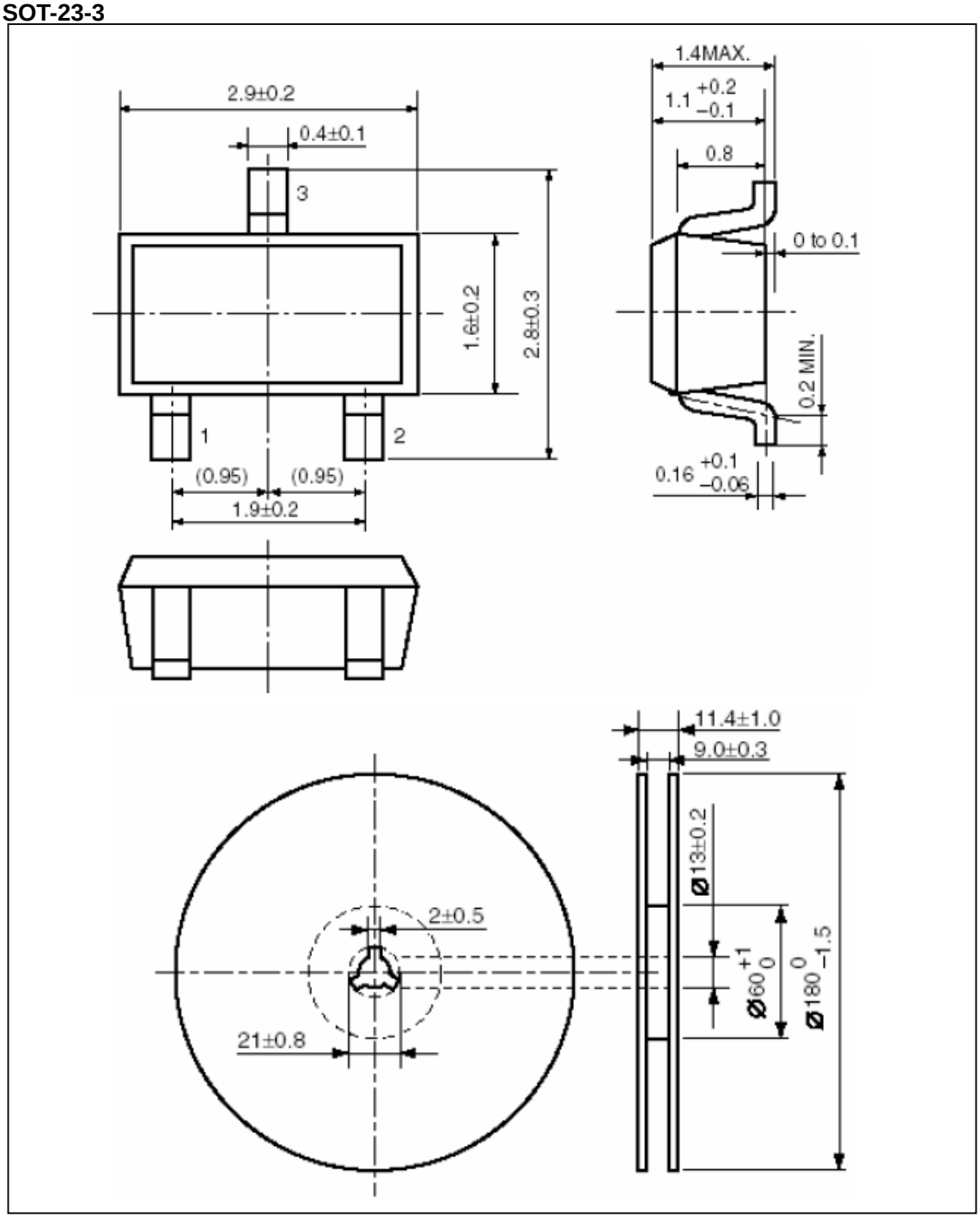

Notes

ACE does not assume any responsibility for use as critical components in life support devices or systems without the express written approval of the president and general counsel of ACE Electronics Co., LTD. As sued herein:

1. Life support devices or systems are devices or systems which, (a) are intended for surgical implant into the body, or (b) support or sustain life, and shoes failure to perform when properly used in accordance with instructions for use provided in the labeling, can be reasonably expected to result in a significant injury to the user.
2. A critical component is any component of a life support device or system whose failure to perform can be reasonably expected to cause the failure of the life support device or system, or to affect its safety or effectiveness.

ACE Technology Co., LTD.
http://www.ace-ele.com/