TOSHIBA CMOS Digital Integrated Circuit Silicon Monolithic

TC7MPB9326FT,TC7MPB9326FK,TC7MPB9326FTG
TC7MPB9327FT,TC7MPB9327FK,TC7MPB9327FTG

Low Voltage / Low Power Dual SPDT Supply Bus Switch

The TC7MPB9326 and TC7MPB9327 are CMOS dual multiplexer/demultiplexer bus switches that can provide an interface between two nodes at different voltage levels. These devices can be connected to two independent power supplies. V_{CCA} supports 1.8-V, 2.5-V and 3.3-V power supplies, whereas V_{CCB} supports 2.5-V, 3.3-V and 5.0V power supplies.

Bidirectional level-shifting is possible by simply adding external pull-up resistors between the An/Bn data lines and the V_{CCA} / V_{CCB} supplies. There is no restriction on the relative magnitude of the An and Bn voltages; both the 1A,2A and 1B1/1B2 ,2B1/2B2 data lines can be pulled up to the arbitrary power supplies.

The Output Enable pin (OE) can be used to disable the device so that the bus lines are effectively isolated.

This device consists of dual individual two-inputs multiplexer/demultiplexer with a common select input (S) and an output enable (OE:TC7MPB9326, $\overline{OE}$:TC7MPB9327). The 1A/2A inputs are connected to 1B1/1B2 and 2B1/2B2 outputs based on the combination of select input and output enable.

For TC7MPB9326, it has an active high Output Enable (OE) : When OE is High, the switch is on; when Low, the switch is turned off. For the TC7MPB9327, it has an active low Output Enable ($\overline{OE}$) : When $\overline{OE}$ is Low, the switch is switch turned on; when $\overline{OE}$ High the switch is off.

The TC7MPB9326 and TC7MP9327 supports power-down protection at the $\overline{OE}$, OE input, with $\overline{OE}$, OE being 5.5-V tolerant.

The channels consist of n-type MOSFETs.

All the inputs provide protection against electrostatic discharge.

TC7MPB9326FT,TC7MPB9327FT

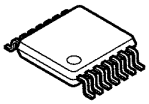

TSSOP14-P-0044-0.65A

TC7MPB9326FK,TC7MPB9327FK

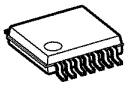

VSSOP14-P-0030-0.50

TC7MPB9326FTG,TC7MPB9327FTG

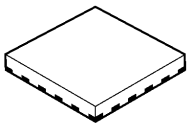

VQON16-P-0303-0.50

Weight

TSSOP14-P-0044-0.65A	: 0.06 g (typ.)
VSSOP14-P-0030-0.50	: 0.02 g (typ.)
VQON16-P-0303-0.50	: 0.013 g (typ.)

Features

- Operating voltage: 1.8-V to 2.5-V, 1.8-V to 3.3-V, 1.8-V to 5.0-V, 2.5-V to 3.3-V, 2.5-V to 5.0-V or 3.3-V to 5.0-V bidirectional interface
- Operating voltage: V_{CCA} = 1.65 to 5.0 V, V_{CCB} = 2.3 to 5.5 V
- Low ON-resistance: R_{ON} = 5.0 Ω (typ.)
  (ON-resistance test circuit: V_{IS} = 0 V, I_{IS} = 30 mA, V_{CCA}= 3.0 V , V_{CCB} = 4.5 V)
- ESD performance: Machine model ≥ ±200 V
  Human body model ≥ ±2000 V
- 5.5-V tolerance and power-down protection at the Output Enable input.
- Packages: TSSOP14, VSSOP14(US14), VQON16

Pin Assignment (top view)

TSSOP14, US14

TC7MPB9326FT/FK

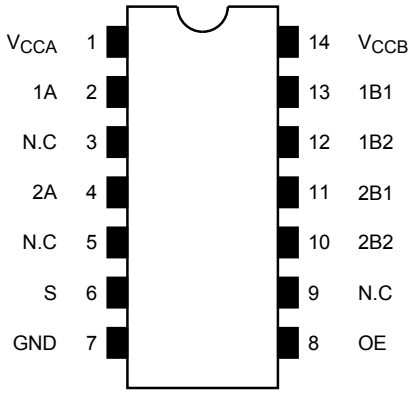

TC7MPB9327FT/FK

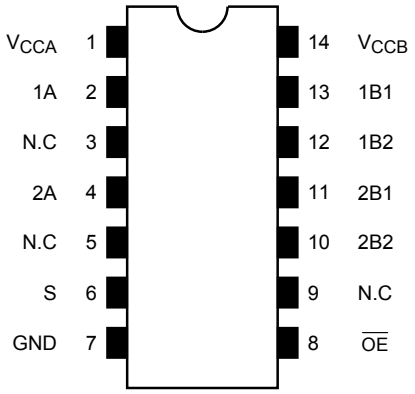

VQON16

TC7MPB9326FTG

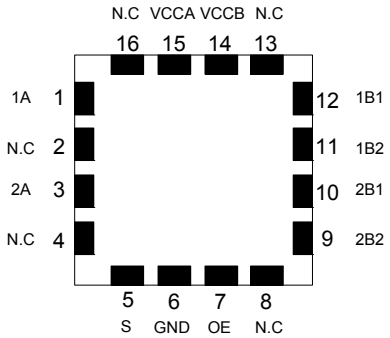

TC7MPB9327FTG

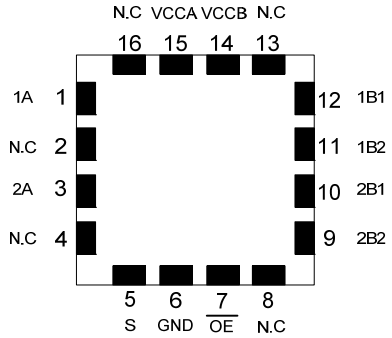

Truth Table

Inputs(9326)		Function	Inputs(9327)		Function
OE	S		$\overline{OE}$	S	
H	L	A=B1	L	L	A=B1
H	H	A=B2	L	H	A=B2
L	X	Disconnect	H	X	Disconnect

Circuit Schematic

TC7MPB9326

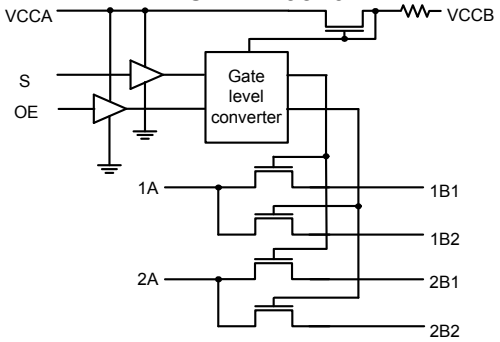

TC7MPB9327

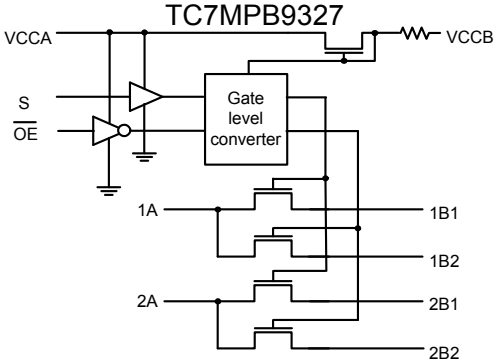

Absolute Maximum Ratings (Note)

Characteristics	Symbol	Rating	Unit
Power supply voltage	V_{CCA}	−0.5 to 7.0	V
	V_{CCB}	−0.5 to 7.0	
Control input voltage	V_{IN}	−0.5 to 7.0	V
Switch input/output voltage	V_S	−0.5 to 7.0	V
Clump diode current	I_{IK}	−50	mA
Switch input/output current	I_S	64	mA
DC V_{CC}/ground current per supply pin	I_{CCA}	±25	mA
	I_{CCB}	±25	
Power dissipation	P_D	180	mW
Storage temperature	T_{stg}	−65 to 150	°C

Note: Exceeding any of the absolute maximum ratings, even briefly, lead to deterioration in IC performance or even destruction.
Using continuously under heavy loads (e.g. the application of high temperature/current/voltage and the significant change in temperature, etc.) may cause this product to decrease in the reliability significantly even if the operating conditions (i.e. operating temperature/current/voltage, etc.) are within the absolute maximum ratings and the operating ranges.
Please design the appropriate reliability upon reviewing the Toshiba Semiconductor Reliability Handbook ("Handling Precautions"/"Derating Concept and Methods") and individual reliability data (i.e. reliability test report and estimated failure rate, etc).

Operating Ranges (Note 1)

Characteristics	Symbol	Rating	Unit
Power supply voltage (Note 2)	V_{CCA}	1.65 to 5.0	V
	V_{CCB}	2.3 to 5.5	
Control input voltage	V_{IN}	0 to 5.5	V
Switch input/output voltage	V_S	0 to 5.5	V
Operating temperature	T_{opr}	−40 to 85	°C
Control input rise and fall times	dt/dv	0 to 10	ns/V

Note 1: The operating ranges must be maintained to ensure the normal operation of the device.

Unused inputs and bus inputs must be tied to either V_{CCA} or GND.

Note 2: The V_{CCA} voltage must be lower than the V_{CCB} voltage.

Application Circuit

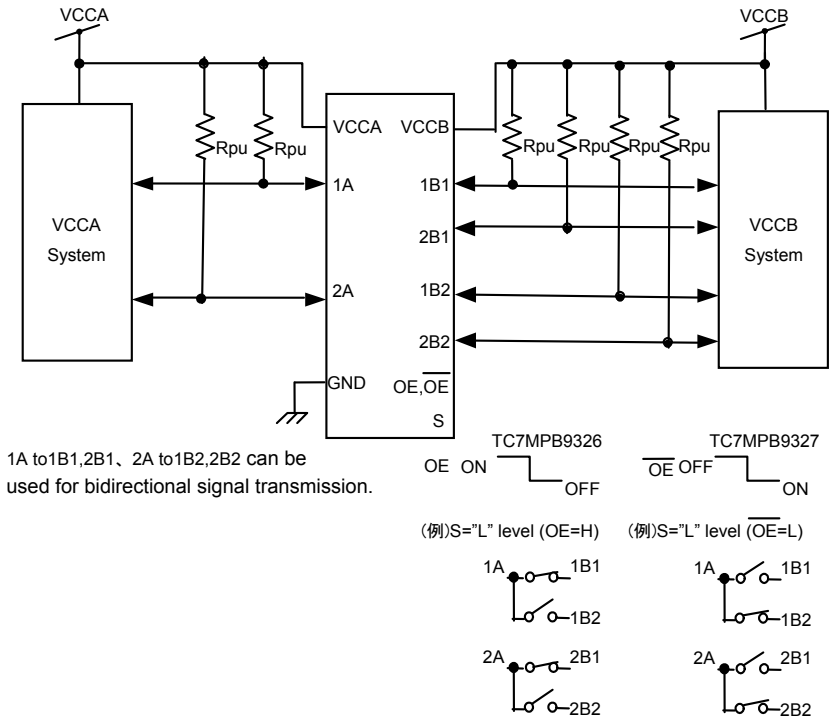

Figure 1 Application Circuit Diagram

The V_{CCA} voltage must be lower than the V_{CCB} voltage.

Level-shifting functionality is enabled by adding pull-up resistors from An to V_{CCA} or V_{CCB} and from Bn to V_{CCB} or V_{CCA}, respectively.

Electrical Characteristics

DC Characteristics (Ta = –40 to 85°C)

Characteristics		Symbol	Test Condition	V_{CCA} (V)	V_{CCB} (V)	Ta = –40 to 85°C Min	Ta = –40 to 85°C Max	Unit
input voltage (OE/ $\overline{OE}$, S)	High-level	V_{IH}	—	$1.65 \le V_{CCA} < 2.3$	V_{CCA} to 5.5	0.8× V_{CCA}	—	V
				$2.3 \le V_{CCA} < 5.0$	V_{CCA} to 5.5	0.7× V_{CCA}	—	
	Low-level	V_{IL}	—	$1.65 \le V_{CCA} < 2.3$	V_{CCA} to 5.5	—	0.2× V_{CCA}	
				$2.3 \le V_{CCA} < 5.0$	V_{CCA} to 5.5	—	0.3× V_{CCA}	
ON-resistance (Note)		R_{ON}	V_{IS} = 0 V, I_{IS} = 30 mA (Figure 2)	1.65	2.3	—	16.0	Ω
				2.3	3.0	—	11.0	
				3.0	4.5	—	8.0	
Power off leakage current		I_{OFF}	1A, 2A,1Bn, 2Bn = 0 to 5.5 V (per circuit)	0	0	—	±1.0	μA
Switch-off leakage current		I_{SZ}	1A, 2A,1Bn, 2Bn = 0 to 5.5 V $\overline{OE}$ = V_L, OE=GND	1.65 to 5.0	V_{CCA} to 5.5	—	±1.0	μA
Control input current		I_{IN}	OE, $\overline{OE}$, S = 0 to 5.5V	1.65 to 5.0	V_{CCA} to 5.5	—	±1.0	μA
leakage current form V_{CCB} to V_{CCA}		I_{CCBA}	OE, $\overline{OE}$ = 0 or V_{CCA} V_{CCB} →V_{CCA}	3.3	5.0	—	20.0	μA
Quiescent supply current		I_{CCA1}	OE, $\overline{OE}$ = V_{CCA} or GND, I_S=0 A	1.65 to 5.0	V_{CCA}	—	4.0	μA
		I_{CCB1}	OE, $\overline{OE}$ = V_{CCA} or GND, I_S=0 A	1.65 to 5.0	V_{CCA}	—	4.0	
		I_{CCA2}	$V_{CCA} \le$ OE, $\overline{OE} \le$ 5.5 V, I_S=0 A	1.65 to 5.0	V_{CCA}	—	±4.0	
		I_{CCB2}	$V_{CCA} \le$ OE, $\overline{OE} \le$ 5.5 V, I_S=0 A	1.65 to 5.0	V_{CCA}	—	±4.0	

Note: ON-resistance is measured by measuring the voltage drop across the switch at the indicated current.

Level Shift Characteristics (Ta = –40 to 85°C)

Characteristics	Symbol	Test Condition	V_{CCA} (V)	V_{CCB} (V)	Ta = –40 to 85°C Min	Ta = –40 to 85°C Max	Unit
Input/Output Characteristics (Up Translation) (Note 1)	V_{OHU}	1A,2A = V_{IN} SW = ON (Figure 7)	1.65	3.0 to 5.5	1.4	—	V
			2.3	4.5 to 5.5	2.05	—	
			3.0	4.5 to 5.5	2.7	—	
Input/Output Characteristics (Down Translation) (Note 2)	V_{OHD}	1A,2A = V_{CCA} SW = ON (Figure 9)	1.65	3.3 to 5.5	1.3	1.65	
			2.3	4.5 to 5.5	1.95	2.3	
			3.0	4.5 to 5.5	2.6	3.0	

Note 1: The Input/Output Characateristics for up translation indicate the input voltages required to provide V_{CCA} + 0.5 V on the outputs when measured using the test circuitry shown in Figure 7.

Note 2: The Input/Output Characateristics for down translation indicate the voltages that cause the output voltages to saturate when measured using the test circuitry shown in Figure 9.

AC Characteristics (Ta = –40 to 85°C, Input: $t_r = t_f = 2.0$ ns,f=10kHz)

V_{CCA}= 3.3 ± 0.3 V, V_{CCB}= 5.0 ± 0.5 V

Characteristics	Symbol	Test Condition	Min	Max	Unit
Propagation delay time (Bus to Bus)	t_{pLH}	Figures 3 and 5 (Note)	—	0.3	ns
Propagation delay time (Bus to Bus)	t_{pHL}	Figures 3 and 5 (Note)	—	1.2	
Output enable time	t_{pZL}	Figures 4 and 6	—	9.0	
Output disable time	t_{pLZ}	Figures 4 and 6	—	11.0	

Note: This parameter is guaranteed by design but is not tested. The bus switch contributes no propagation delay other than the RC delay of the typical On resistance of the switch and the 30 pF load capacitance, when driven by an ideal voltage the source (zero output impedance).

V_{CCA}= 2.5 ± 0.2 V, V_{CCB}= 5.0 ± 0.5 V

Characteristics	Symbol	Test Condition	Min	Max	Unit
Propagation delay time (Bus to Bus)	t_{pLH}	Figures 3 and 5 (Note)	—	0.35	ns
Propagation delay time (Bus to Bus)	t_{pHL}	Figures 3 and 5 (Note)	—	1.8	
Output enable time	t_{pZL}	Figures 4 and 6	—	13.0	
Output disable time	t_{pLZ}	Figures 4 and 6	—	15.0	

Note: This parameter is guaranteed by design but is not tested. The bus switch contributes no propagation delay other than the RC delay of the typical On resistance of the switch and the 30 pF load capacitance, when driven by an ideal voltage the source (zero output impedance).

V_{CCA} = 2.5 ± 0.2 V, V_{CCB}= 3.3 ± 0.3 V

Characteristics	Symbol	Test Condition	Min	Max	Unit
Propagation delay time (Bus to Bus)	t_{pLH}	Figures 3 and 5 (Note)	—	0.45	ns
Propagation delay time (Bus to Bus)	t_{pHL}	Figures 3 and 5 (Note)	—	2.2	
Output enable time	t_{pZL}	Figures 4 and 6	—	17.0	
Output disable time	t_{pLZ}	Figures 4 and 6	—	19.0	

Note: This parameter is guaranteed by design but is not tested. The bus switch contributes no propagation delay other than the RC delay of the typical On resistance of the switch and the 30 pF load capacitance, when driven by an ideal voltage the source (zero output impedance).

Capacitive Characteristics (Ta = 25°C)

Characteristics		Symbol	Test Condition	V_{CCA} (V)	V_{CCB} (V)	Typ.	Unit
Control input capacitance	(OE/ $\overline{OE}$, S)	C_{IN}		3.3	3.3	3	pF
Switch input/output capacitance	(1A,2A)	$C_{I/O}$	SW=ON (A,B)	3.3	3.3	14	
	(1A,2A)		SW=OFF (A)	3.3	3.3	7	
	(1B1,1B2,2B1,2B2)		SW=OFF (B)	3.3	3.3	7	

DC Test Circuit

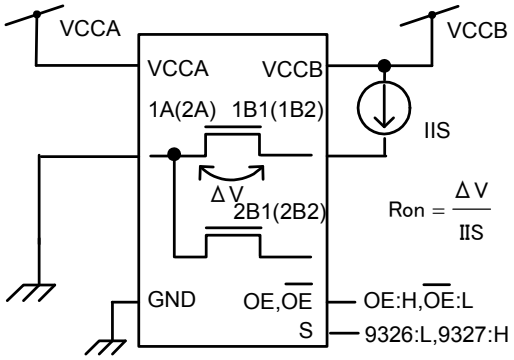

Figure 2 ON-resistance Test Circuits

AC Test Circuits

- **tpLH, HL**

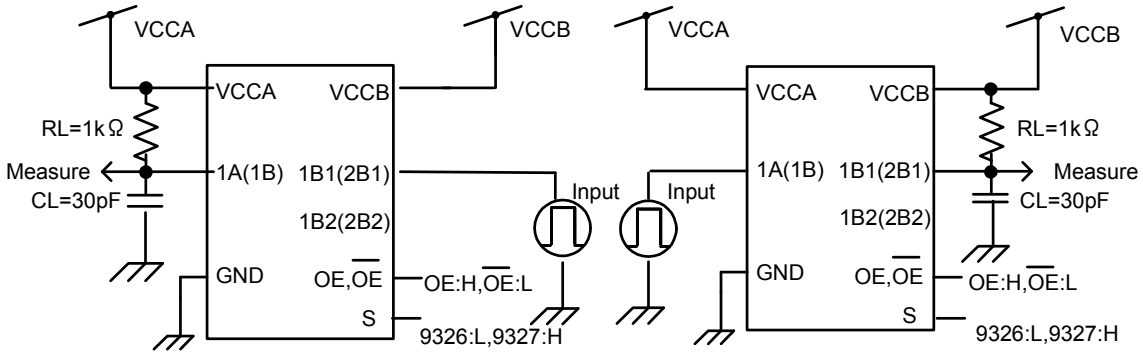

Figure 3 t_{pLH}, t_{pHL} Test Circuits

- **tpLZ, ZL**

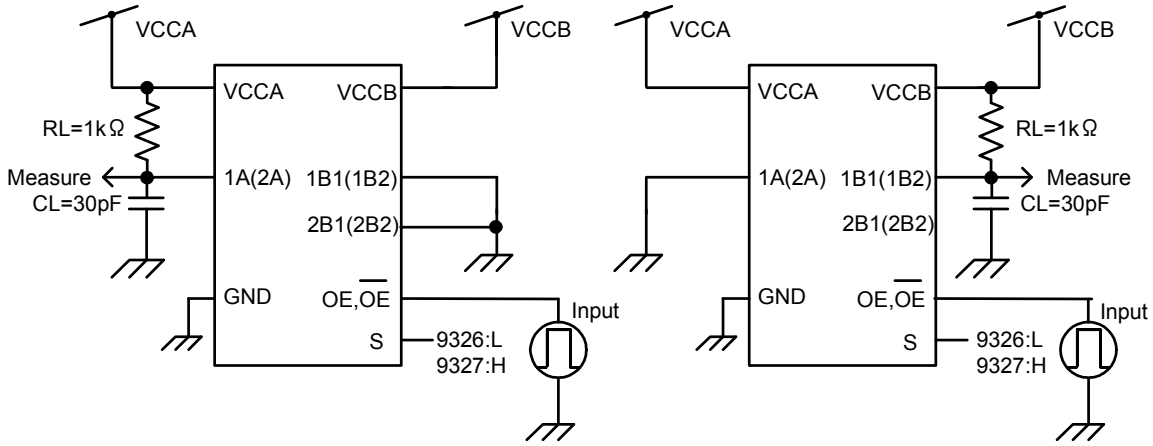

Figure 4 t_{pLZ}, t_{pZL} Test Circuits

AC Waveform

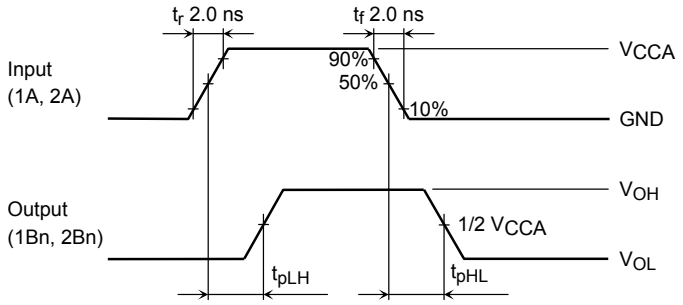

Figure 5 t_{pLH}, t_{pHL}

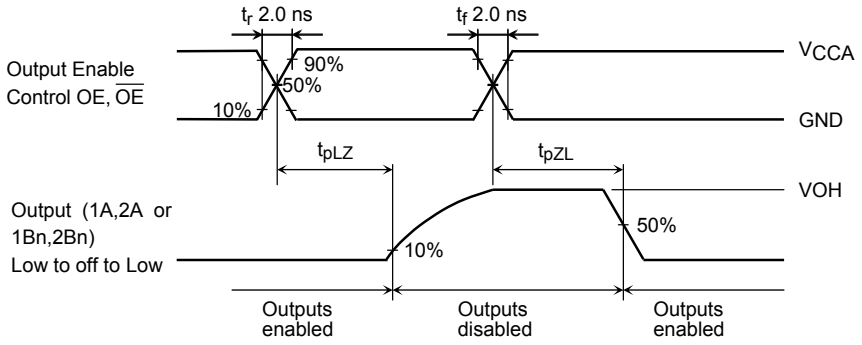

Figure 6 t_{pLZ}, t_{pZL}

Level Shift Function (Used Pull-up Resistance)

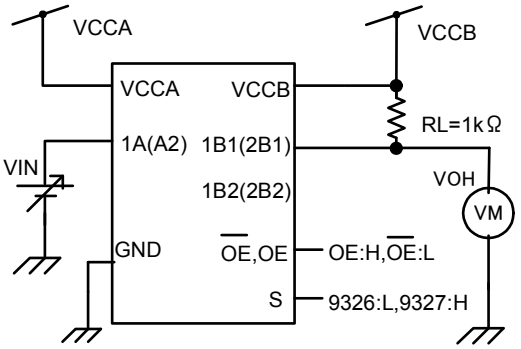

Figure 7 Test Circuit

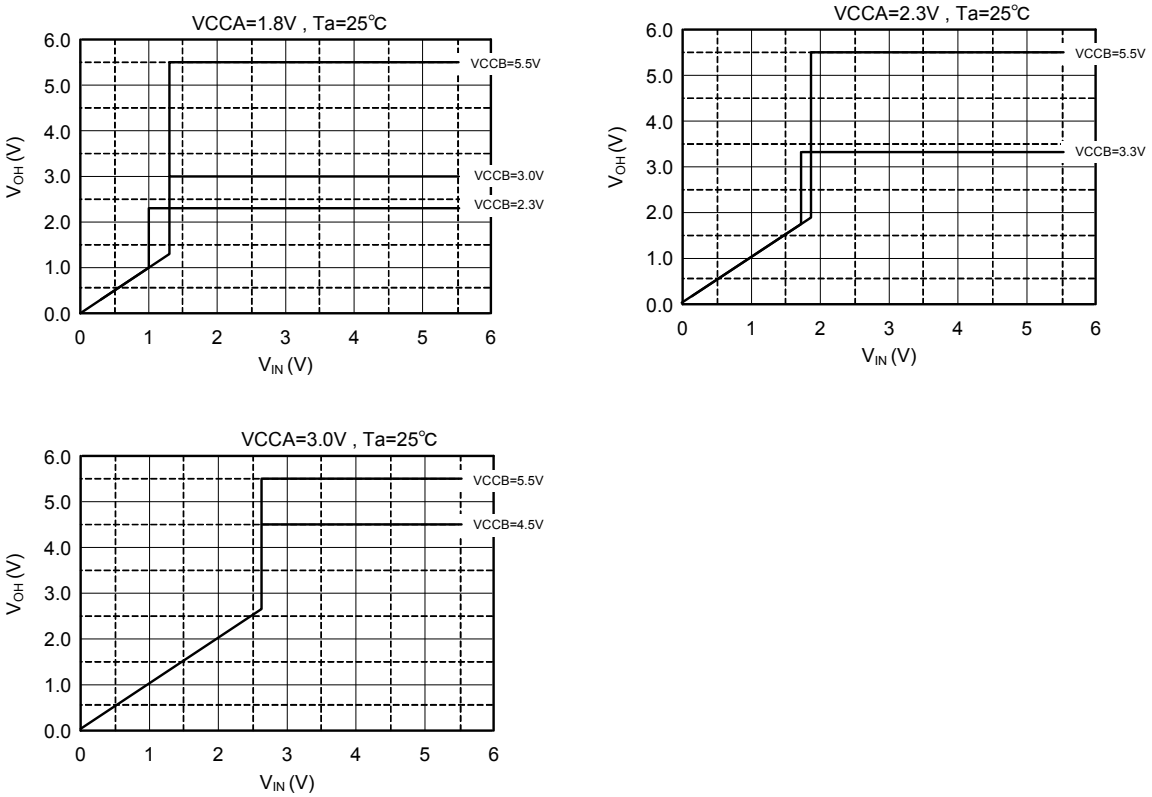

Figure 8 Input/Output Characteristics (Typ.)

Level Shift Function (Unused Pull-up Resistance)

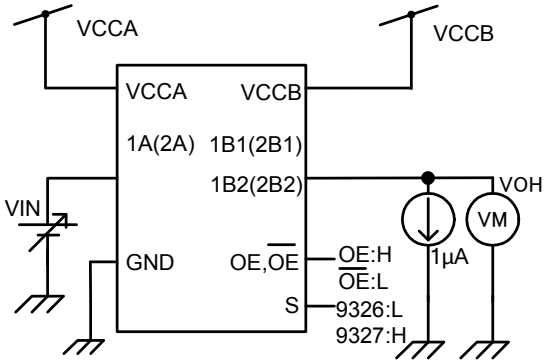

Figure 9 Test Circuit

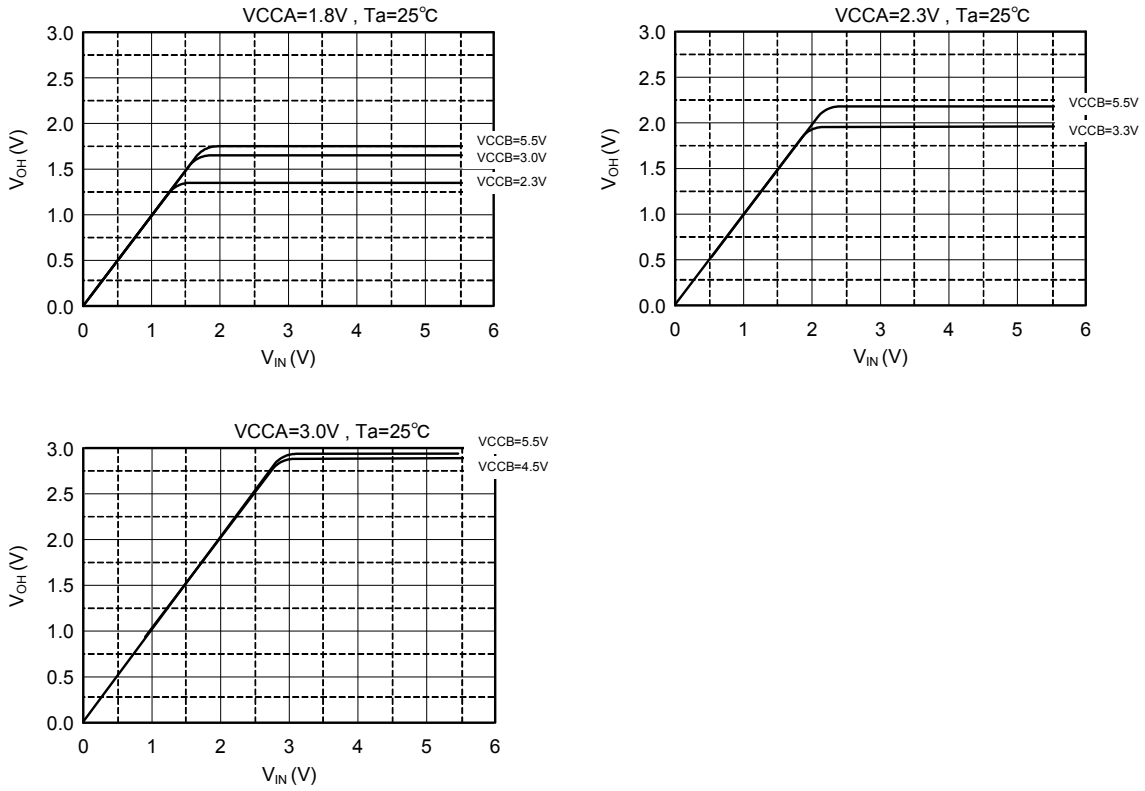

Figure 10 Input/Output Characteristics (Typ.)

Package Dimensions

TSSOP14-P-0044-0.65A Unit: mm

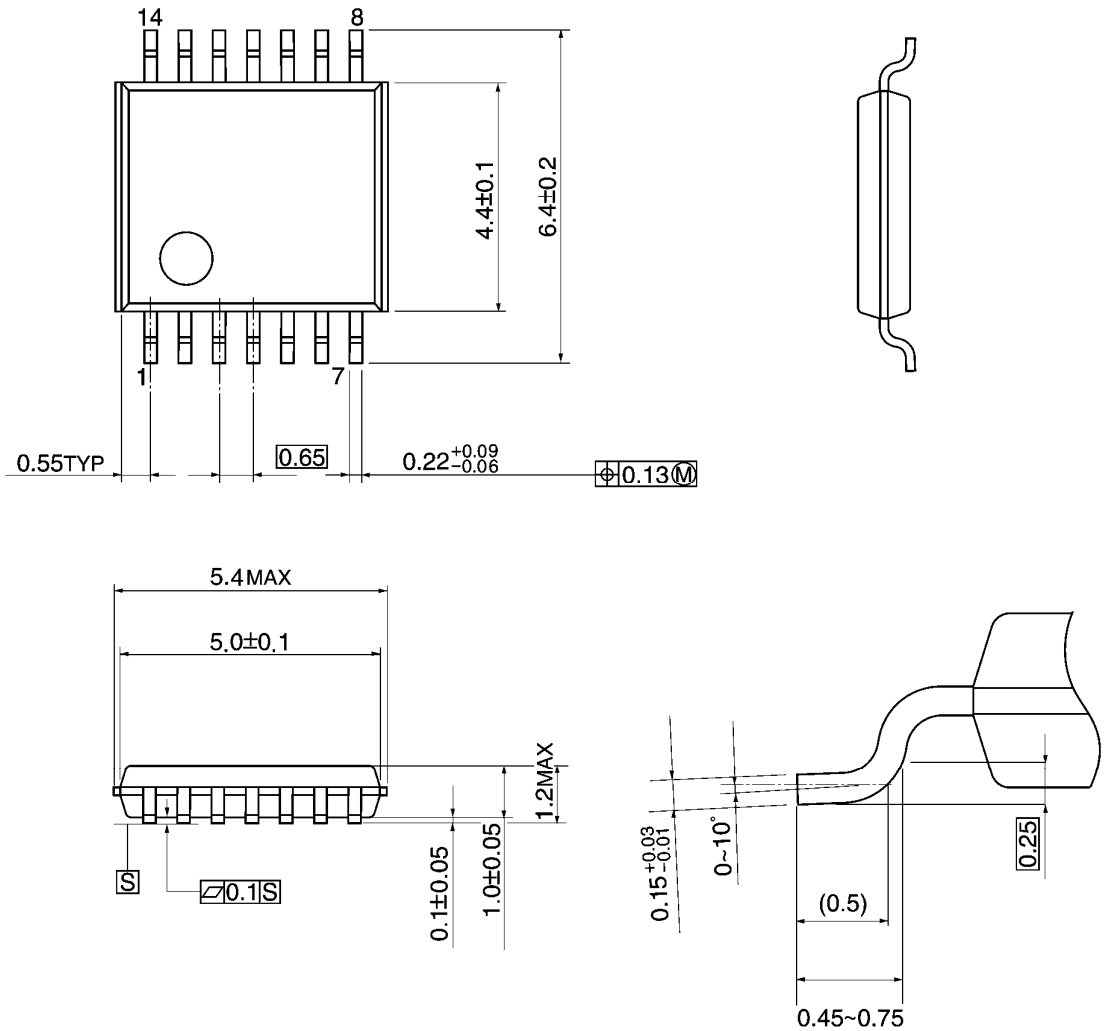

Weight: 0.06 g (typ.)

Package Dimensions

VSSOP14-P-0030-0.50 Unit: mm

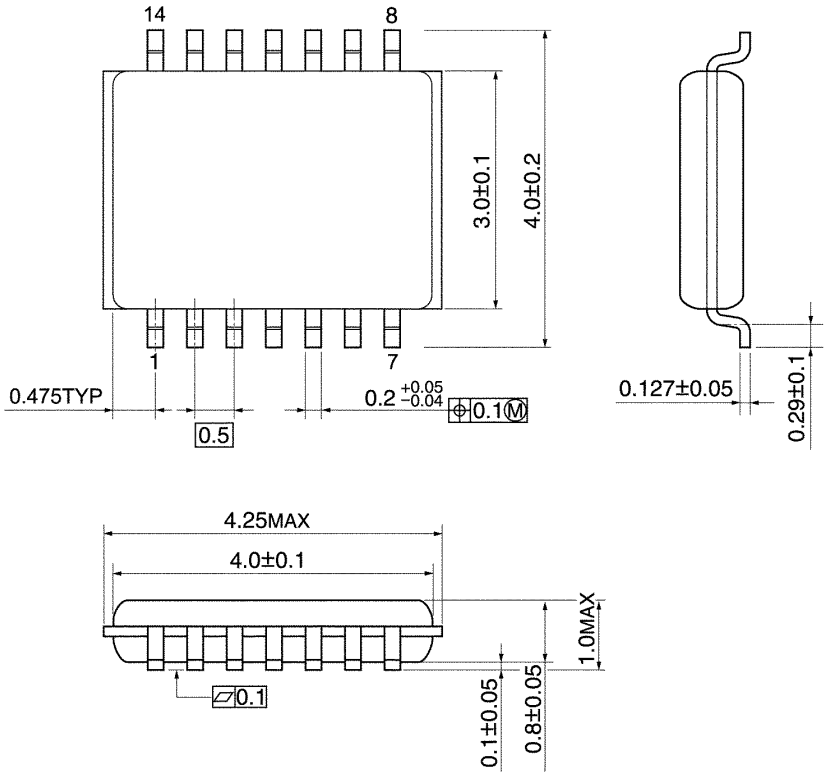

Weight: 0.02 g (typ.)

Package Dimensions

VQON16-P-0303-0.50 Unit: mm

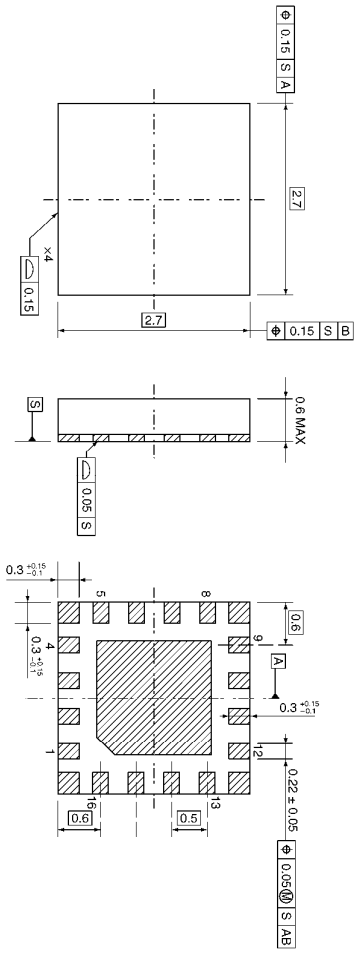

Weight: 0.013 g (typ.)

RESTRICTIONS ON PRODUCT USE

- Toshiba Corporation, and its subsidiaries and affiliates (collectively "TOSHIBA"), reserve the right to make changes to the information in this document, and related hardware, software and systems (collectively "Product") without notice.
- This document and any information herein may not be reproduced without prior written permission from TOSHIBA. Even with TOSHIBA's written permission, reproduction is permissible only if reproduction is without alteration/omission.
- Though TOSHIBA works continually to improve Product's quality and reliability, Product can malfunction or fail. Customers are responsible for complying with safety standards and for providing adequate designs and safeguards for their hardware, software and systems which minimize risk and avoid situations in which a malfunction or failure of Product could cause loss of human life, bodily injury or damage to property, including data loss or corruption. Before creating and producing designs and using, customers must also refer to and comply with (a) the latest versions of all relevant TOSHIBA information, including without limitation, this document, the specifications, the data sheets and application notes for Product and the precautions and conditions set forth in the "TOSHIBA Semiconductor Reliability Handbook" and (b) the instructions for the application that Product will be used with or for. Customers are solely responsible for all aspects of their own product design or applications, including but not limited to (a) determining the appropriateness of the use of this Product in such design or applications; (b) evaluating and determining the applicability of any information contained in this document, or in charts, diagrams, programs, algorithms, sample application circuits, or any other referenced documents; and (c) validating all operating parameters for such designs and applications. **TOSHIBA ASSUMES NO LIABILITY FOR CUSTOMERS' PRODUCT DESIGN OR APPLICATIONS.**
- Product is intended for use in general electronics applications (e.g., computers, personal equipment, office equipment, measuring equipment, industrial robots and home electronics appliances) or for specific applications as expressly stated in this document. Product is neither intended nor warranted for use in equipment or systems that require extraordinarily high levels of quality and/or reliability and/or a malfunction or failure of which may cause loss of human life, bodily injury, serious property damage or serious public impact ("Unintended Use"). Unintended Use includes, without limitation, equipment used in nuclear facilities, equipment used in the aerospace industry, medical equipment, equipment used for automobiles, trains, ships and other transportation, traffic signaling equipment, equipment used to control combustions or explosions, safety devices, elevators and escalators, devices related to electric power, and equipment used in finance-related fields. Do not use Product for Unintended Use unless specifically permitted in this document.
- Do not disassemble, analyze, reverse-engineer, alter, modify, translate or copy Product, whether in whole or in part.
- Product shall not be used for or incorporated into any products or systems whose manufacture, use, or sale is prohibited under any applicable laws or regulations.
- The information contained herein is presented only as guidance for Product use. No responsibility is assumed by TOSHIBA for any infringement of patents or any other intellectual property rights of third parties that may result from the use of Product. No license to any intellectual property right is granted by this document, whether express or implied, by estoppel or otherwise.
- **ABSENT A WRITTEN SIGNED AGREEMENT, EXCEPT AS PROVIDED IN THE RELEVANT TERMS AND CONDITIONS OF SALE FOR PRODUCT, AND TO THE MAXIMUM EXTENT ALLOWABLE BY LAW, TOSHIBA (1) ASSUMES NO LIABILITY WHATSOEVER, INCLUDING WITHOUT LIMITATION, INDIRECT, CONSEQUENTIAL, SPECIAL, OR INCIDENTAL DAMAGES OR LOSS, INCLUDING WITHOUT LIMITATION, LOSS OF PROFITS, LOSS OF OPPORTUNITIES, BUSINESS INTERRUPTION AND LOSS OF DATA, AND (2) DISCLAIMS ANY AND ALL EXPRESS OR IMPLIED WARRANTIES AND CONDITIONS RELATED TO SALE, USE OF PRODUCT, OR INFORMATION, INCLUDING WARRANTIES OR CONDITIONS OF MERCHANTABILITY, FITNESS FOR A PARTICULAR PURPOSE, ACCURACY OF INFORMATION, OR NONINFRINGEMENT.**
- Do not use or otherwise make available Product or related software or technology for any military purposes, including without limitation, for the design, development, use, stockpiling or manufacturing of nuclear, chemical, or biological weapons or missile technology products (mass destruction weapons). Product and related software and technology may be controlled under the Japanese Foreign Exchange and Foreign Trade Law and the U.S. Export Administration Regulations. Export and re-export of Product or related software or technology are strictly prohibited except in compliance with all applicable export laws and regulations.
- Please contact your TOSHIBA sales representative for details as to environmental matters such as the RoHS compatibility of Product. Please use Product in compliance with all applicable laws and regulations that regulate the inclusion or use of controlled substances, including without limitation, the EU RoHS Directive. TOSHIBA assumes no liability for damages or losses occurring as a result of noncompliance with applicable laws and regulations.