TOSHIBA TRANSISTOR SILICON NPN EPITAXIAL PLANAR TYPE

2SC2395

2~30MHz SSB LINEAR POWER AMPLIFIER APPLICATIONS
(LOW SUPPLY VOLTAGE USE)

Unit in mm

- Specified 12.5V, 28MHz Characteristics
- Output Power : $P_o = 10W_{PEP}$ (Min.)
- Power Gain : $G_p = 17dB$ (Min.)
- Collector Efficiency : $\eta_C = 35\%$ (Min.)
- Intermodulation Distortion : IMD = −30dB (Max.)

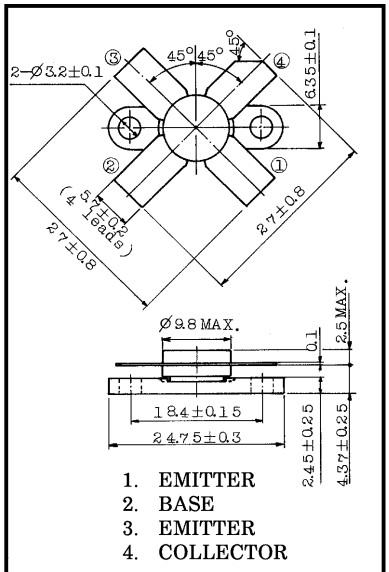

JEDEC	—
EIAJ	—
TOSHIBA	2-10H1A

Weight : 4.0g

MAXIMUM RATINGS (Tc = 25°C)

CHARACTERISTIC	SYMBOL	RATING	UNIT
Collector-Base Voltage	V_{CBO}	40	V
Collector-Emitter Voltage	V_{CES}	40	V
Collector-Emitter Voltage	V_{CEO}	18	V
Emitter-Base Voltage	V_{EBO}	4	V
Collector Current	I_C	5	A
Collector Power Dissipation	P_C	40	W
Junction Temperature	T_j	175	°C
Storage Temperature Range	T_{stg}	−65~175	°C

ELECTRICAL CHARACTERISTICS (Tc = 25°C)

CHARACTERISTIC	SYMBOL	TEST CONDITION	MIN.	TYP.	MAX.	UNIT
Collector-Emitter Breakdown Voltage	$V_{(BR)CEO}$	$I_C = 10mA$, $I_B = 0$	18	—	—	V
Collector-Emitter Breakdown Voltage	$V_{(BR)CES}$	$I_C = 50mA$, $V_{EB} = 0$	40	—	—	V
Emitter-Base Breakdown Voltage	$V_{(BR)EBO}$	$I_E = 1mA$, $I_C = 0$	4	—	—	V
DC Current Gain	h_{FE}	$V_{CE} = 5V$, $I_C = 1A$ *	20	—	—	
Transition Frequency	f_T	$V_{CE} = 5V$, $I_C = 1A$	—	200	—	MHz
Collector Output Capacitance	C_{ob}	$V_{CB} = 12.5V$, $I_E = 0$ f = 1MHz	—	—	150	pF
Power Gain	G_p	$V_{CC} = 12.5V$, $f_1 = 28.000$ MHz, $f_2 = 28.001MHz$ $I_{idle} = 50mA$ $P_o = 10W_{PEP}$(Fig.)	17.0	—	—	dB
Input Power	Pi		—	—	0.2	W_{PEP}
Collector Efficiency	η_C		35	45	—	%
Intermodulation Distortion	IMD		—	—	−30	dB
Series Equivalent Input Impedance	Z_{in}	$V_{CC} = 12.5V$, $f_1 = 28.000$ MHz, $f_2 = 28.001MHz$ $P_o = 10W_{PEP}$	—	1.5 −j1.0	—	Ω
Series Equivalent Output Impedance	Z_{out}		—	6.5 −j2.0	—	Ω

* Pulse Test: Pulse Width ≦ 100μs, Duty Cycle ≦ 3%

CAUTION

Beryllia Ceramic is used in this product. The dust or vapor can be dangerous to humans. Do not break, cut, crush or dissolve chemically. Dispose of this product properly according to law. Do not intermingle with normal industrial or domestic waste.

961001EAA2

Fig. Pi TEST CIRCUIT

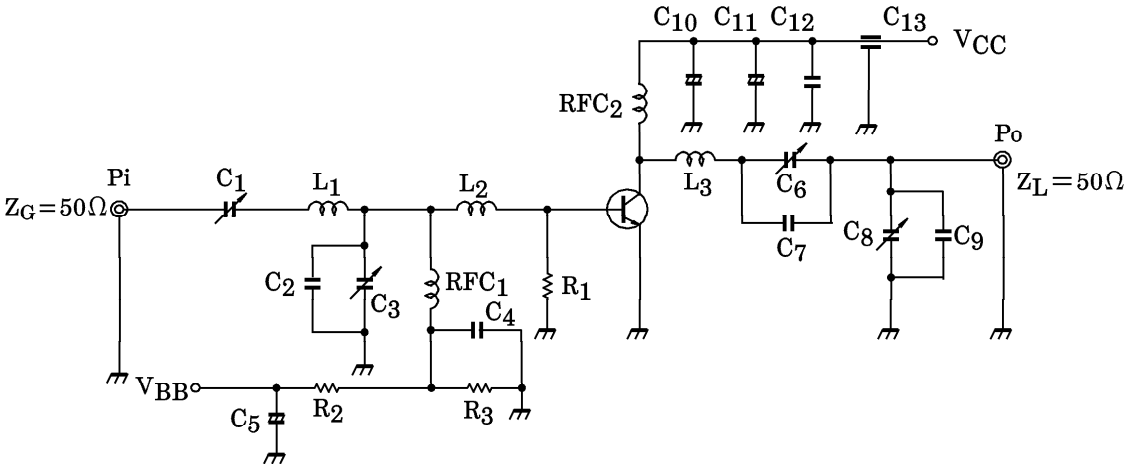

C_1, C_3, C_6	: 7~150pF	L_1	: ϕ0.8 ENAMEL COATED COPPER WIRE, 9ID, 6T
C_8	: 10~200pF	L_2	: ϕ1 SILVER PLATED COPPER WIRE, 9ID, 2T
C_2	: 200pF	L_3	: ϕ1.5 ENAMEL COATED COPPER WIRE, 9ID, 5T
C_4, C_{12}	: 0.4μF	RFC_1	: ϕ0.8 ENAMEL COATED COPPER WIRE, 9ID, 20T
C_5	: 100μF 10WV	RFC_2	: ϕ1.5 ENAMEL COATED COPPER WIRE, 12ID, 15T
C_7	: 350pF	R_1	: 5.6Ω (1/2W)
C_9	: 200pF	R_2	: 5Ω (5W)
C_{10}, C_{11}	: 22μF 35WV	R_3	: 1.5Ω (10W)
C_{13}	: 1000pF (FEED THROUGH)		

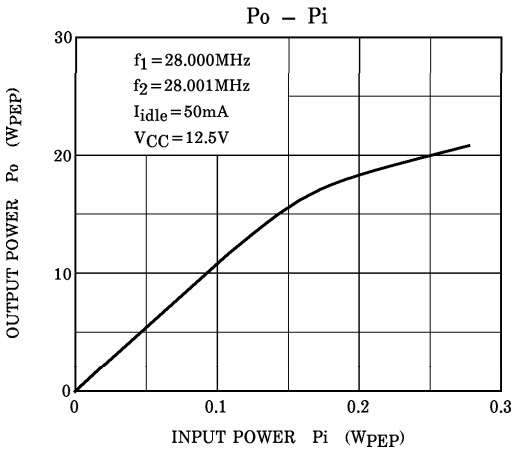

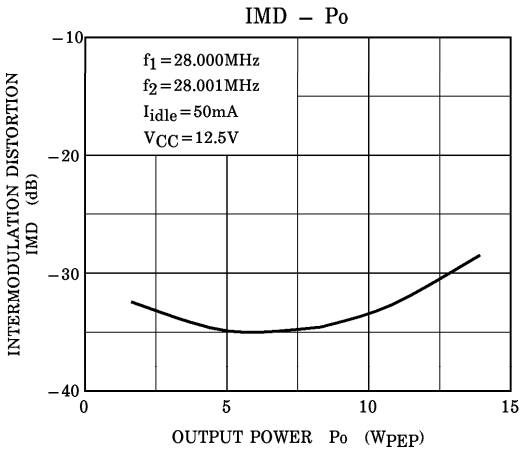

CAUTION

These are only typical curves and devices are not necessarily guaranteed at these curves.