AK5380

96kHz 24Bit ΔΣ ADC with Single–ended Input

GENERAL DESCRIPTION

The AK5380 is a stereo A/D Converter with wide sampling rate of 4kHz~96kHz and is suitable for High-end audio system. The AK5380 achieves high accuracy and low cost by using Enhanced dual bit ΔΣ techniques. The AK5380 requires no external components because the analog inputs are single-ended. The audio interface has two formats (MSB justified, I^2S) and can correspond to many systems like music instrument and AV receiver.

FEATURES

- ☐ **Stereo ΔΣ ADC**
- ☐ **On-Chip Digital Anti-Alias Filtering**
- ☐ **Single-ended Input**
- ☐ **Digital HPF for DC-Offset cancel**
- ☐ **S/(N+D): 96dB@5V for 48kHz**
- ☐ **DR: 106dB@5V for 48kHz**
- ☐ **S/N: 106dB@5V for 48kHz**
- ☐ **Sampling Rate Ranging from 4kHz to 96kHz**
- ☐ **Master Clock:**
  - **256fs/384fs/512fs/768fs (~48kHz)**
  - **256fs/384fs (~96kHz)**
- ☐ **Input level: TTL/CMOS selectable**
- ☐ **Output format: 24bit MSB justified / I^2S selectable**
- ☐ **Power Supply: 4.5~5.5V (VA)**
  - **2.7~5.5V (VD at 48kHz)**
  - **4.5~5.5V (VD at 96kHz)**
- ☐ **Ta=-40~85°C**
- ☐ **Small 16pin TSSOP Package**
- ☐ **AK5353 Pin-compatible**

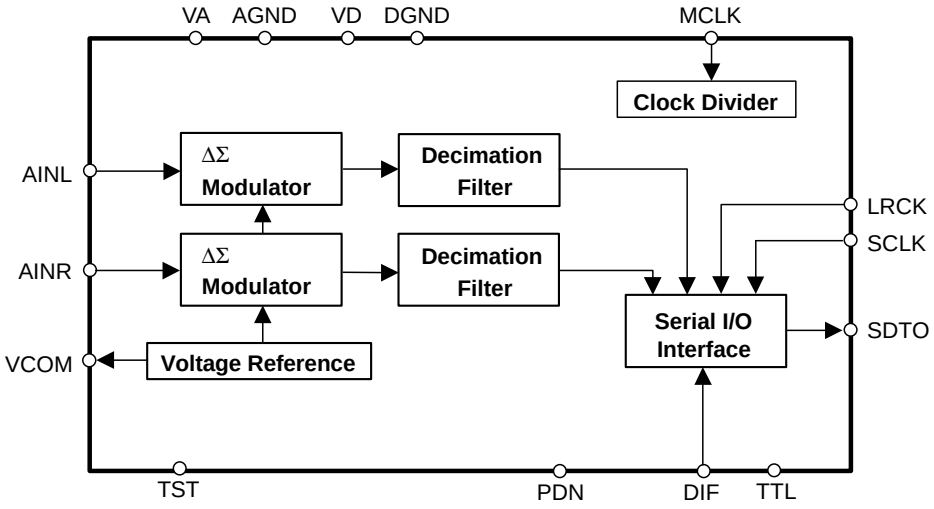

Downloaded from Elcodis.com electronic components distributor

■ Ordering Guide

AK5380VT	-40~+85°C	16pin TSSOP
AKD5380	Evaluation Board	

■ Pin Layout

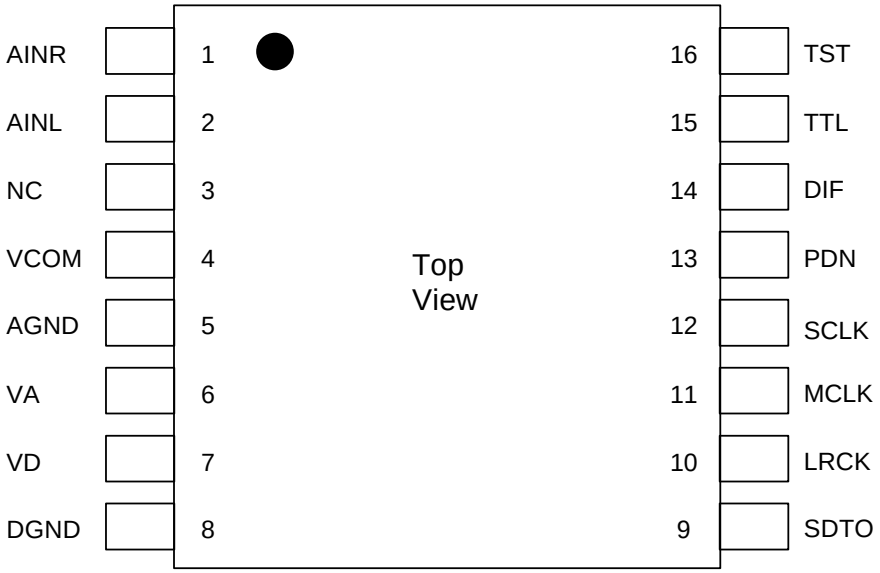

■ The difference with AK5353

	AK5353	AK5380
S/(N+D)	84dB	96dB
DR,S/N	96dB	106dB
VA(Analog Supply)	2.7 to 5.5V	4.5 to 5.5V
Input Resistance	60kΩ(@48kHz)	15kΩ(@48kHz)
Pin #3	VREF pin	NC pin

Downloaded from Elcodis.com electronic components distributor

PIN/FUNCTION

No.	Pin Name	I/O	Description
1	AINR	I	Rch Analog Input Pin
2	AINL	I	Lch Analog Input Pin
3	NC	-	NC Pin No internal bonding.
4	VCOM	O	Common Voltage Output Pin Normally connected to AGND with a 0.1μF ceramic capacitor in parallel with an electrolytic capacitor less than 2.2μF.
5	AGND	-	Analog Ground Pin, 0V
6	VA	-	Analog Power Supply Pin, +4.5~+5.5V
7	VD	-	Digital Power Supply Pin, +2.7~+5.5V(fs=48kHz), +4.5~+5.5V(fs=96kHz)
8	DGND	-	Digital Ground Pin, 0V
9	SDTO	O	Serial Data Output Pin Data bits are presented MSB first, in 2's complement format. This pin is "L" in the power-down mode.
10	LRCK	I	Left/Right Channel Select Pin The fs clock is input to this pin.
11	MCLK	I	Master Clock Input Pin
12	SCLK	I	Serial Data Input Pin Output data is clocked out on the falling edge of SCLK.
13	PDN	I	Power-Down Pin When "L", the circuit is in power-down mode. The AK5380 should always be reset upon power-up.
14	DIF	I	Serial Interface Format Pin "L": MSB justified, "H": I^2S
15	TTL	I	Digital Input Level Select Pin "L": CMOS level (VD=2.7~5.5V), "H": TTL level (VD=4.5~5.5V)
16	TST	I	Test Pin (Internal pull-down pin) This pin should be left open.

Note: All input pins except pull-down pins should not be left floating.

Downloaded from Elcodis.com electronic components distributor

ABSOLUTE MAXIMUM RATINGS

(AGND, DGND=0V; Note 1)

Parameter		Symbol	min	max	Units
Power Supplies	Analog (VA pin)	VA	-0.3	6.0	V
	Digital (VD pin)	VD	-0.3	6.0	V
	|AGND-DGND|	ΔGND	-	0.3	V
Input Current (any pins except for supplies)		IIN	-	±10	mA
Analog Input Voltage (AINL, AINR pins)		VINA	-0.3	VA+0.3	V
Digital Input Voltage		VIND	-0.3	VD+0.3	V
Ambient Temperature		Ta	-40	85	°C
Storage Temperature		Tstg	-65	150	°C

Notes:
1. All voltages with respect to ground.
2. AGND and DGND must be connected to the same analog ground plane.

WARNING: Operation at or beyond these limits may results in permanent damage to the device.
Normal operation is not guaranteed at these extremes.

RECOMMENDED OPERATING CONDITIONS

(AGND, DGND=0V; Note 1)

Parameter		Symbol	min	typ	max	Units
Power Supplies	Analog	VA	4.5	5.0	5.5	V
(Note 3)	Digital (fs=4kHz to 48kHz)	VD	2.7	5.0	VA	V
	Digital (fs=4kHz to 96kHz)	VD	4.5	5.0	VA	V

Notes:
1. All voltages with respect to ground.
3. The power up sequence between VA and VD is not critical.

*AKM assumes no responsibility for the usage beyond the conditions in this datasheet.

Downloaded from Elcodis.com electronic components distributor

ANALOG CHARACTERISTICS

(Ta=25°C; VA,VD=5V; fs=48kHz; I/F format=Mode 0; Signal Frequency =1kHz;
Measurement band width=20Hz~20kHz; BW=40Hz~40kHz at fs=96kHz; unless otherwise specified)

Parameter		min	typ	max	Units
ADC Analog Input Characteristics:					
Resolution				24	Bits
S/(N+D) (-1dBFS) (Note 4)	fs=48kHz	88	96		dB
	fs=96kHz	82	90		dB
DR (-60dBFS) (Note 5)	fs=48kHz, A-weighted	100	106		dB
	fs=96kHz	94	102		dB
S/N	fs=48kHz, A-weighted	100	106		dB
	fs=96kHz	94	102		dB
Interchannel Isolation		90	110		dB
DC Accuracy					
Interchannel Gain Mismatch			0.1	0.5	dB
Gain Drift			100	150	ppm/°C
Input Voltage	(Note 6)				
	fs=48kHz	2.8	3.0	3.2	Vpp
	fs=96kHz	3.0	3.2	3.4	Vpp
Input Resistance	(Note 7)	10	15		kΩ
Power Supply Rejection	(Note 8)	-	50		dB
Power Supplies					
Power Supply Current (VA+VD)					
Normal Operation (PDN= “H”, fs=48kHz)	(Note 9)		24	36	mA
Normal Operation (PDN= “H”, fs=96kHz)	(Note 9)		30	45	mA
Power-Down Mode (PDN= “L”)			10	100	μA

Notes:

4. The ratio of the rms value of the signal to the rms sum of all the spectral components less than 20kHz bandwidth, including distortion components.
5. S/(N+D) which is measured with an input signal of -60dB below full-scale.
6. This value is the full scale(0dB) of the input voltage. Input voltage is proportional to VA. (Vin=0.6xVA)
7. 9kΩ(typ) and 6kΩ(min) at fs=96kHz.
8. PSR is applied to VA,VD with 1kHz, 50mVpp.
9. VA=16mA(typ); VD=8mA(typ)@48kHz&5V, 5mA(typ)@48kHz&3V, 14mA(typ)@96kHz&5V.

Downloaded from Elcodis.com electronic components distributor

FILTER CHARACTERISTICS (fs=48kHz)

(Ta=25°C; VA=4.5~5.5V; VD=2.7~5.5V; fs=48kHz)

Parameter		Symbol	min	typ	max	Units
Digital Filter (Decimation LPF)						
Passband (Note 10)	-0.005dB	PB	0		21.5	kHz
	-0.02dB		-	21.768	-	kHz
	-0.06dB		-	22.0	-	kHz
	-6.0dB		-	24.0	-	kHz
Stopband (Note 10)		SB	26.5			kHz
Stopband Attenuation		SA	80			dB
Group Delay Distortion		ΔGD		0		μs
Group Delay (Note 11)		GD	-	27.6	-	1/fs
Digital Filter (HPF)						
Frequency Response:	-3dB	FR	-	1.0	-	Hz
	-0.5dB		-	2.9	-	Hz
	-0.1dB		-	6.5	-	Hz

Notes:

10. The passband and stopband frequencies scale with fs.
11. The calculating delay time which occurred by digital filtering. This time is from the input of analog signal to setting the 24bit data of both channels to the output register for ADC.

FILTER CHARACTERISTICS (fs=96kHz)

(Ta=25°C; VA=4.5~5.5V; VD=4.5~5.5V; fs=96kHz)

Parameter		Symbol	min	typ	max	Units
Digital Filter (Decimation LPF)						
Passband (Note 10)	-0.005dB	PB	0		43.0	kHz
	-0.02dB		-	43.536	-	kHz
	-0.06dB		-	44.0	-	kHz
	-6.0dB		-	48.0	-	kHz
Stopband (Note 10)		SB	53.0			kHz
Stopband Attenuation		SA	80			dB
Group Delay Distortion		ΔGD		0		μs
Group Delay (Note 11)		GD	-	27.6	-	1/fs
Digital Filter (HPF)						
Frequency Response:	-3dB	FR	-	2	-	Hz
	-0.5dB		-	5.8	-	Hz
	-0.1dB		-	13	-	Hz

Notes:

10. The passband and stopband frequencies scale with fs.
11. The calculating delay time which occurred by digital filtering. This time is from the input of analog signal to setting the 24bit data of both channels to the output register for ADC.

Downloaded from Elcodis.com electronic components distributor

DIGITAL CHARACTERISTICS (CMOS level input)

(Ta=25°C; VA=4.5~5.5V; VD=2.7~5.5V; TTL = "L")

Parameter	Symbol	min	typ	Max	Units
High-Level input voltage	VIH	0.7xVD	-	-	V
Low-Level input voltage	VIL	-	-	0.3xVD	V
High-Level output voltage (Iout= -100μA)	VOH	VD-0.5	-	-	V
Low-Level output voltage (Iout= 100μA)	VOL	-	-	0.5	V
Input leakage current (except TST pin)	Iin	-	-	±10	μA

DIGITAL CHARACTERISTICS (TTL level input)

(Ta=25°C; VA=4.5~5.5V; VD=4.5~5.5V; TTL = "H")

Parameter	Symbol	min	typ	Max	Units
High-Level input voltage (TTL pin)	VIH	0.7xVD	-	-	V
(All pins except TTL pin)	VIH	2.2	-	-	V
Low-Level input voltage (TTL pin)	VIL	-	-	0.3xVD	V
(All pins except TTL pin)	VIL	-	-	0.8	V
High-Level output voltage (Iout= -100μA)	VOH	VD-0.5	-	-	V
Low-Level output voltage (Iout= 100μA)	VOL	-	-	0.5	V
Input leakage current (except TST pin)	Iin	-	-	±10	μA

Downloaded from Elcodis.com electronic components distributor

SWITCHING CHARACTERISTICS (fs=4kHz~48kHz)

(Ta=-40~85°C; VA=4.5~5.5V; VD=2.7~5.5V; C_L=20pF)

Parameter	Symbol	min	typ	max	Units
Control Clock Frequency					
Master Clock 256fs:	fCLK	1.024		12.288	MHz
Pulse Width Low	tCLKL	32			ns
Pulse Width High	tCLKH	32			ns
384fs:	fCLK	1.536		18.432	MHz
Pulse Width Low	tCLKL	21			ns
Pulse Width High	tCLKH	21			ns
512fs:	fCLK	2.048		24.576	MHz
Pulse Width Low	tCLKL	16			ns
Pulse Width High	tCLKH	16			ns
768fs:	fCLK	3.072		36.864	MHz
Pulse Width Low	tCLKL	11			ns
Pulse Width High	tCLKH	11			ns
SCLK Frequency	fSLK			6.144	MHz
LRCK Frequency	fs	4		48	kHz
Serial Interface Timing (Note 12)					
SCLK Period	tSLK	160			ns
SCLK Pulse Width Low	tSLKL	65			ns
Pulse Width High	tSLKH	65			ns
LRCK Edge to SCLK "↑" (Note 13)	tLRSH	30			ns
SCLK "↑" to LRCK Edge (Note 13)	tSHLR	30			ns
LRCK Edge to SDTO Valid (Note 14)	tDLR			35	ns
SCLK "↓" to SDTO Valid	tDSS			35	ns
Power-Down & Reset Timing					
PDN Pulse Width	tPDW	150			ns
PDN "↑" to SDTO delay (Note 15)	tPDV		4129		1/fs

Notes:

12. Refer to the operating overview section "Serial Data Interface".
13. SCLK rising edge must not occur at the same time as LRCK edge.
14. In case of MSB justified format.
15. These cycles are the number of LRCK rising from PDN rising.

Downloaded from Elcodis.com electronic components distributor

SWITCHING CHARACTERISTICS (fs=48kHz~96kHz)

(Ta=-40~85°C; VA=4.5~5.5V; VD=4.5~5.5V; C_L=20pF)

Parameter	Symbol	min	typ	max	Units
Control Clock Frequency					
Master Clock 256fs:	fCLK	12.288		24.576	MHz
Pulse Width Low	tCLKL	16			ns
Pulse Width High	tCLKH	16			ns
384fs:	fCLK	18.432		36.864	MHz
Pulse Width Low	fCLKL	11			ns
Pulse Width High	fCLKH	11			ns
SCLK Frequency	fSLK			6.144	MHz
LRCK Frequency	fs	48		96	kHz
Serial Interface Timing (Note 12)					
SCLK Period	tSLK	160			ns
SCLK Pulse Width Low	tSLKL	65			ns
Pulse Width High	tSLKH	65			ns
LRCK Edge to SCLK "↑" (Note 13)	tLRSH	30			ns
SCLK "↑" to LRCK Edge (Note 13)	tSHLR	30			ns
LRCK Edge to SDTO Valid (Note 14)	tDLR			20	ns
SCLK "↓" to SDTO Valid	tDSS			20	ns
Power-Down & Reset Timing					
PDN Pulse Width	tPDW	150			ns
PDN "↑" to SDTO delay (Note 15)	tPDV		4129		1/fs

Notes:

12. Refer to the operating overview section "Serial Data Interface".
13. SCLK rising edge must not occur at the same time as LRCK edge.
14. In case of MSB justified format.
15. These cycles are the number of LRCK rising from PDN rising.

Downloaded from Elcodis.com electronic components distributor

■ Timing Diagram

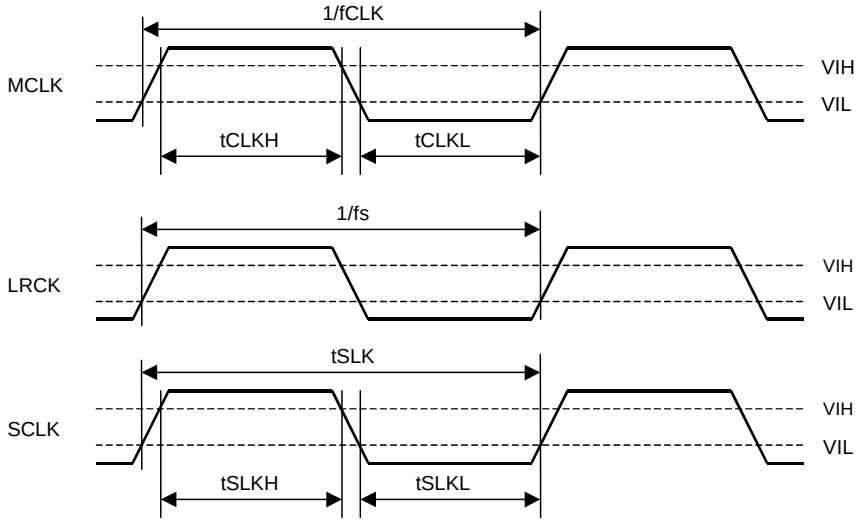

Clock Timing

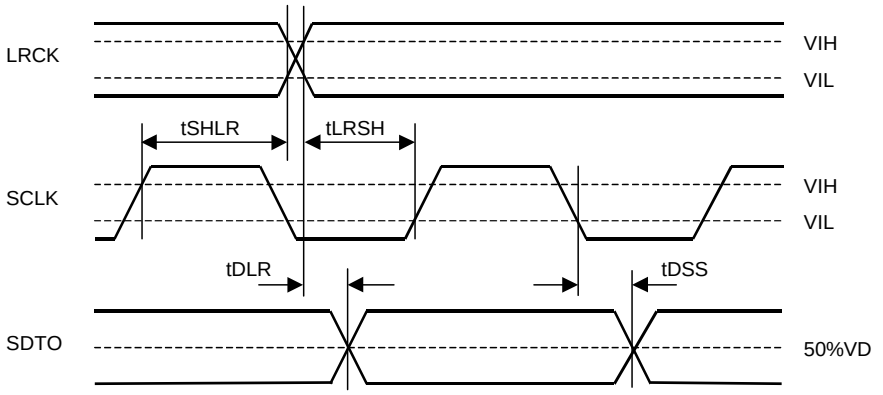

Serial Interface Timing

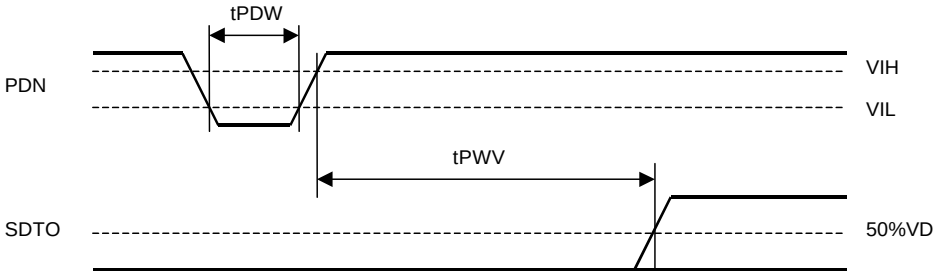

Power-down & Reset Timing

Downloaded from Elcodis.com electronic components distributor

OPERATION OVERVIEW

■ System Clock Input

The external clocks which are required to operate the AK5380 are MCLK(256fs/384fs/512fs/768fs), LRCK(1fs), SCLK. MCLK should be synchronized with LRCK but the phase is not critical. When 384fs, 512fs or 768fs clock is input to MCLK pin, the internal master clock becomes 256fs(=384fs x 2/3=512fs x 1/2=768fs x 1/3). Table 1 illustrates standard audio word rates and corresponding frequencies used in the AK5380.

All external clocks (MCLK,BICK,LRCK) should always be present whenever the AK5380 is in normal operation mode (PDN = “H”). If these clocks are not provided, the AK5380 may draw excess current and may not possibly operate properly because the device utilizes dynamic refreshed logic internally. If the external clocks are not present, the AK5380 should be in the power-down mode (PDN = “L”). After exiting reset at power-up etc., the AK5380 is in the power-down mode until MCLK and LRCK are input.

fs	MCLK				SCLK	
	256fs	384fs	512fs	768fs	64fs	128fs
32.0kHz	8.1920MHz	12.2880MHz	16.3840MHz	24.576MHz	2.0480MHz	4.0960MHz
44.1kHz	11.2896MHz	16.9344MHz	22.5792MHz	33.8688MHz	2.8224MHz	5.6448MHz
48.0kHz	12.2880MHz	18.4320MHz	24.5760MHz	36.8640MHz	3.0720MHz	6.1440MHz
96.0kHz	24.5760MHz	36.8640MHz	N/A	N/A	6.1440MHz	N/A

Table 1. Example of System Clock

■ Serial Data Interface

Two kinds of data format can be selected by DIF pin. The data is clocked out via the SDTO pin by SCLK corresponding to the setting of DIF pin. The format of output data is 2’s complement MSB first.

Mode	DIF	Format
0	0	24bit, MSB justified, L/R, SCLK ≥48fs (16bit, MSB justified, L/R, SCLK=32fs)
1	1	24bit, I2S, SCLK ≥48fs (16bit, I2S, SCLK=32fs)

Table 2. Audio Serial Interface Formats

Downloaded from Elcodis.com electronic components distributor

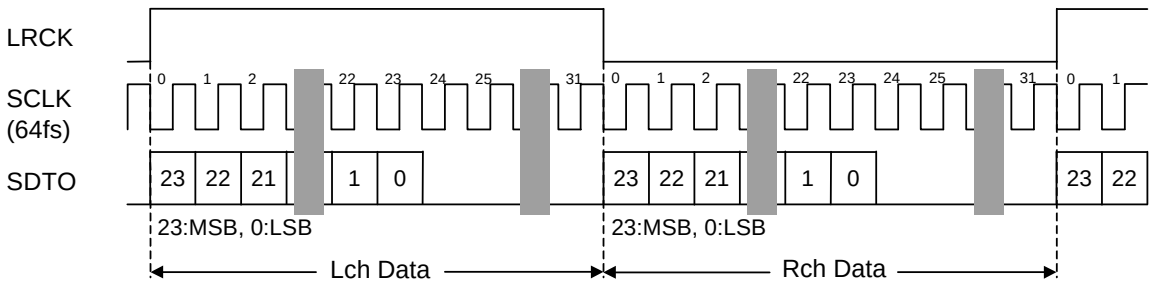

Figure 1. Mode 0 Timing (SCLK=64fs)

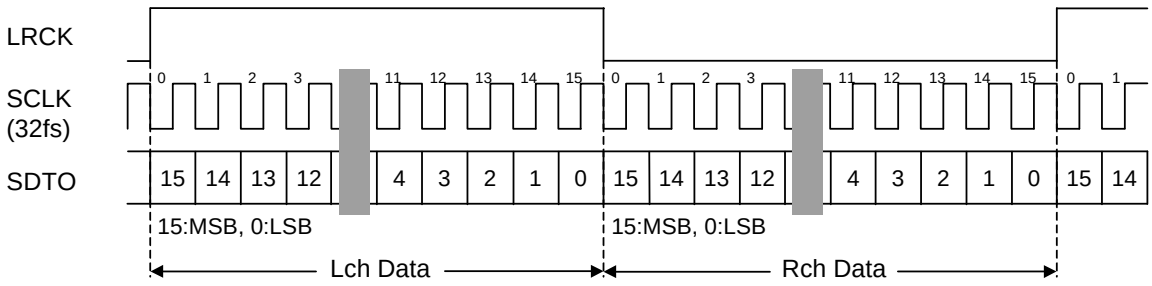

Figure 2. Mode 0 Timing (SCLK=32fs)

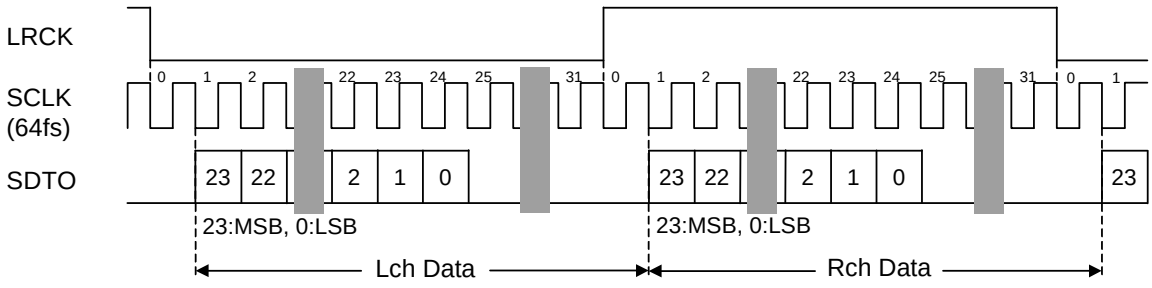

Figure 3. Mode 1 Timing (SCLK=64fs)

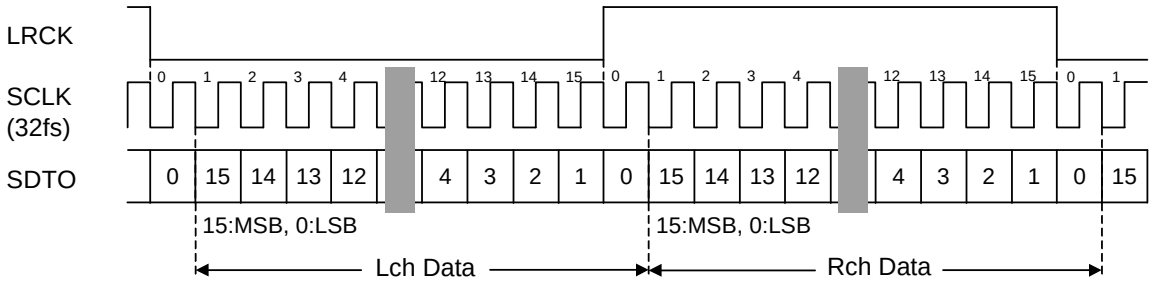

Figure 4. Mode 1 Timing (SCLK=32fs)

Downloaded from Elcodis.com electronic components distributor

■ Power down

The AK5380 is placed in the power-down mode by bringing PDN "L" and the digital filter is also reset at the same time. This reset should always be done after power-up. In the power-down mode, the VCOM are AGND level. An analog initialization cycle starts after exiting the power-down mode. Therefore, the output data SDTO becomes available after 4129 cycles of LRCK clock. During initialization, the ADC digital data outputs of both channels are forced to a 2's complement "0". The ADC outputs settle in the data corresponding to the input signals after the end of initialization (Settling approximately takes the group delay time).

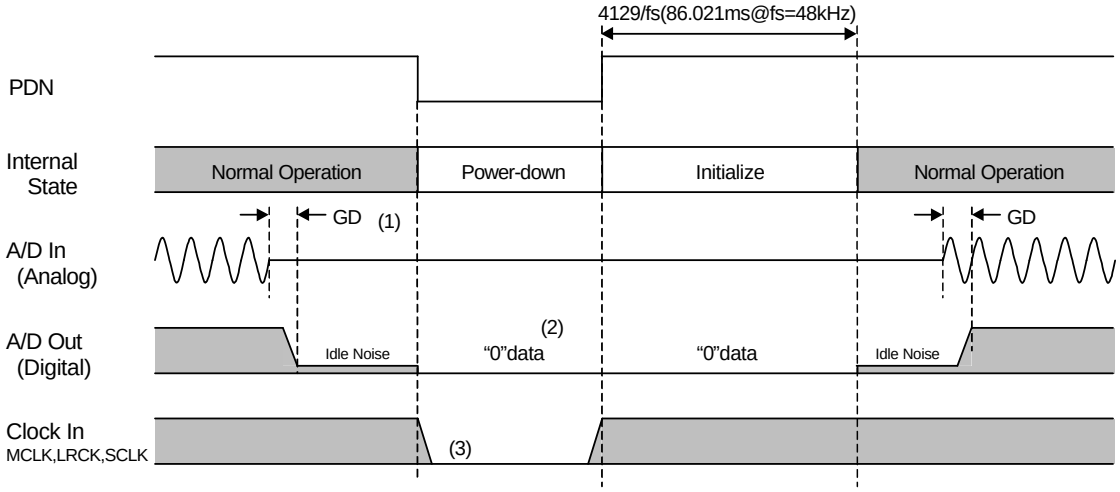

Notes:
(1) Digital output corresponding to analog input has the group delay (GD).
(2) A/D output is "0" data at the power-down state.
(3) When the external clocks (MCLK,SCLK,LRCK) are stopped, the AK5380 should be in the power-down state.

Figure 5. Power-down/up sequence example

■ System Reset

The AK5380 should be reset once by bringing PDN "L" after power-up. The internal timing starts clocking by the rising edge (falling edge at mode1) of LRCK after exiting from reset and power down state by MCLK.

Downloaded from Elcodis.com electronic components distributor

SYSTEM DESIGN

Figure 4 shows the system connection diagram. An evaluation board is available which demonstrates application circuits, the optimum layout, power supply arrangements and measurement results.

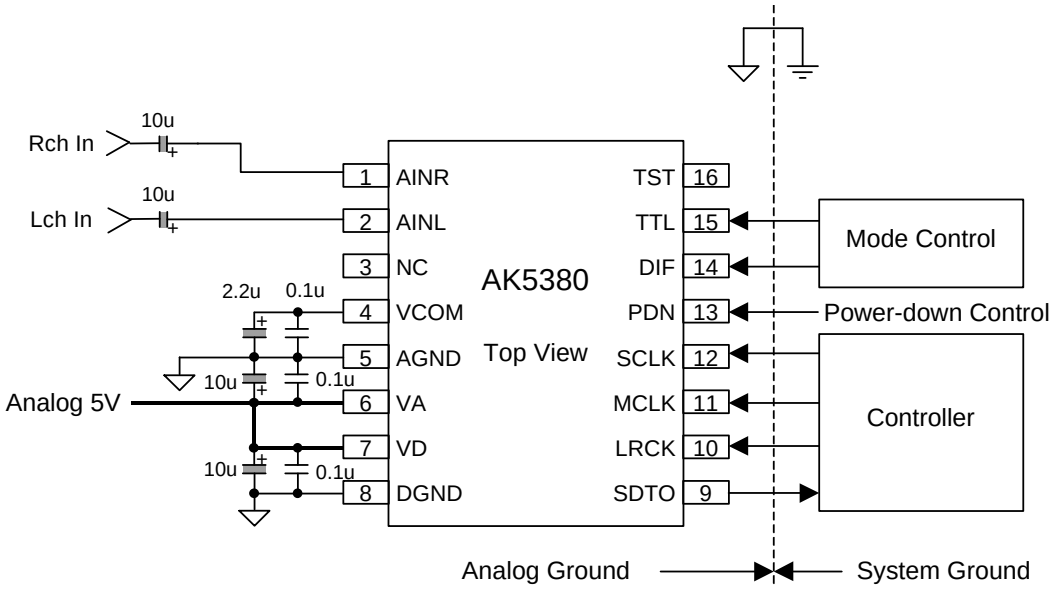

Figure 6. Typical Connection Diagram

Note: The value of electrolytic capacitor at VCOM depends on the low-frequency noise of power supply.

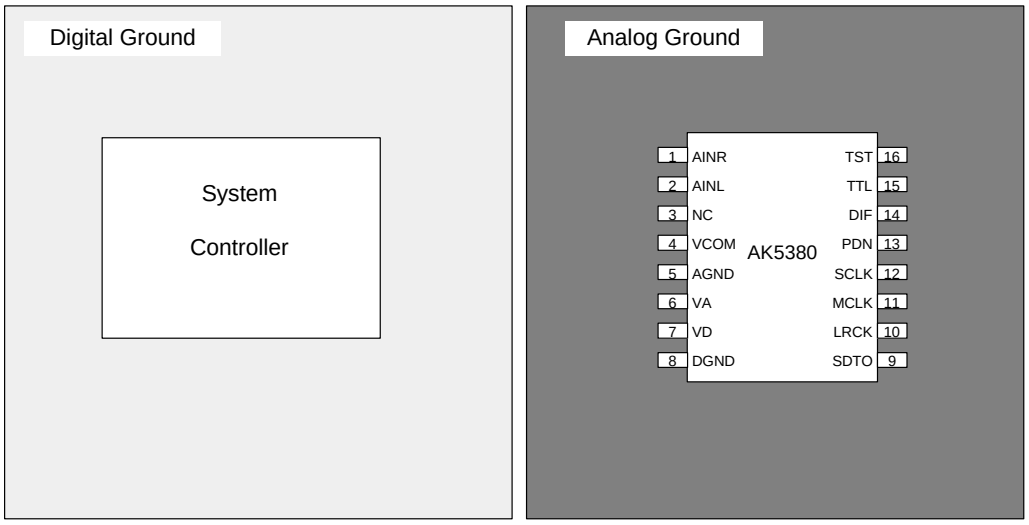

Figure 7. Ground Layout

Note: AGND and DGND must be connected to the same analog ground plane.

Downloaded from Elcodis.com electronic components distributor

1. Grounding and Power Supply decoupling

The AK5380 requires careful attention to power supply and grounding arrangements. VA and VD are usually supplied from analog supply in system. Alternatively if VA and VD are supplied separately, the power up sequence is not critical. **AGND and DGND of the AK5380 must be connected to analog ground plane.** System analog ground and digital ground should be connected together near to where the supplies are brought onto the printed circuit board. Decoupling capacitors should be as near to the AK5380 as possible, with the small value ceramic capacitor being the nearest.

2. On-chip voltage reference

The voltage input to VA sets the analog input range. VCOM are 50%VA and normally connected to AGND with a 0.1µF ceramic capacitor. An electrolytic capacitor 2.2µF parallel with a 0.1µF ceramic capacitor attached to VCOM pin eliminates the effects of high frequency noise. No load current may be drawn from these pins. All signals, especially clocks, should be kept away from the VCOM pin in order to avoid unwanted coupling into the AK5380.

3. Analog Inputs

The ADC inputs are single-ended and internally biased to the common voltage (50%VA) with 15kΩ(typ)@fs=48kHz resistance. The input signal range scales with the supply voltage and nominally 0.6xVA Vpp(typ)@fs=48kHz. The ADC output data format is 2's complement. The DC offset is removed by the internal HPF.

The AK5380 samples the analog inputs at 64fs. The digital filter rejects noise above the stop band except for multiples of 64fs. The AK5380 includes an anti-aliasing filter (RC filter) to attenuate a noise around 64fs.

Downloaded from Elcodis.com electronic components distributor

PACKAGE

16pin TSSOP (Unit: mm)

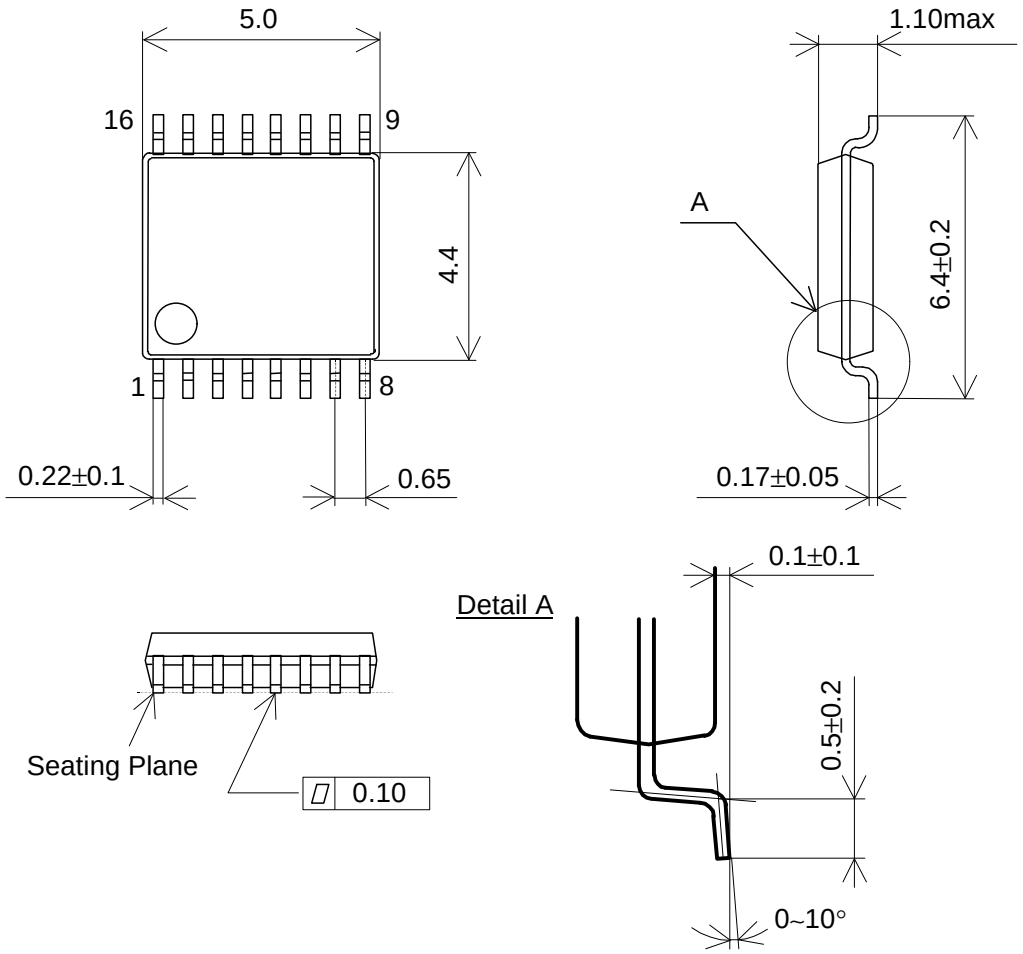

■ Package & Lead frame material

Package molding compound:	Epoxy
Lead frame material:	Cu
Lead frame surface treatment:	Solder plate

Downloaded from Elcodis.com electronic components distributor

MARKING

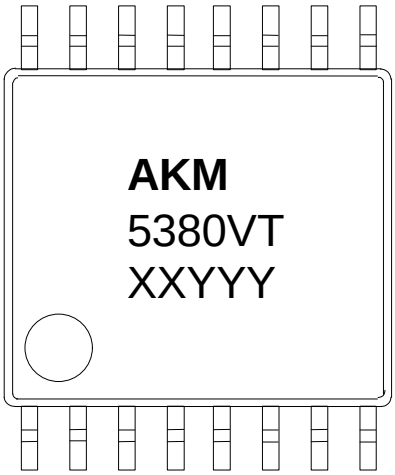

1) Pin #1 indication
2) Date Code : XXYYY (5 digits)
   XX: Lot#
   YYY: Date Code
3) Marketing Code : 5380VT
4) Asahi Kasei Logo

IMPORTANT NOTICE

- These products and their specifications are subject to change without notice. Before considering any use or application, consult the Asahi Kasei Microsystems Co., Ltd. (AKM) sales office or authorized distributor concerning their current status.
- AKM assumes no liability for infringement of any patent, intellectual property, or other right in the application or use of any information contained herein.
- Any export of these products, or devices or systems containing them, may require an export license or other official approval under the law and regulations of the country of export pertaining to customs and tariffs, currency exchange, or strategic materials.
- AKM products are neither intended nor authorized for use as critical components in any safety, life support, or other hazard related device or system, and AKM assumes no responsibility relating to any such use, except with the express written consent of the Representative Director of AKM. As used here:
  (a) A hazard related device or system is one designed or intended for life support or maintenance of safety or for applications in medicine, aerospace, nuclear energy, or other fields, in which its failure to function or perform may reasonably be expected to result in loss of life or in significant injury or damage to person or property.
  (b) A critical component is one whose failure to function or perform may reasonably be expected to result, whether directly or indirectly, in the loss of the safety or effectiveness of the device or system containing it, and which must therefore meet very high standards of performance and reliability.
- It is the responsibility of the buyer or distributor of an AKM product who distributes, disposes of, or otherwise places the product with a third party to notify that party in advance of the above content and conditions, and the buyer or distributor agrees to assume any and all responsibility and liability for and hold AKM harmless from any and all claims arising from the use of said product in the absence of such notification.

Downloaded from Elcodis.com electronic components distributor