LD1117A series

Low drop fixed and adjustable positive voltage regulators

Features

- Low dropout voltage (1.15V typ. @ I_{OUT} = 1A, 25°C)
- Very low quiescent current (5 mA typ. @ 25°C)
- Output current up to 1A
- Fixed output voltage of: 1.2V, 1.8V, 2.5V, 2.85V, 3.3V, 5.0V
- Adjustable version availability (V_{rel} = 1.25V)
- Internal current and thermal limit
- Only 10 µF for stability
- Available in ± 2% (at 25°C) and 4% in full temperature range
- High supply voltage rejection:
  - 80dB typ. at 25°C)
- Temperature range: 0°C to 125°C

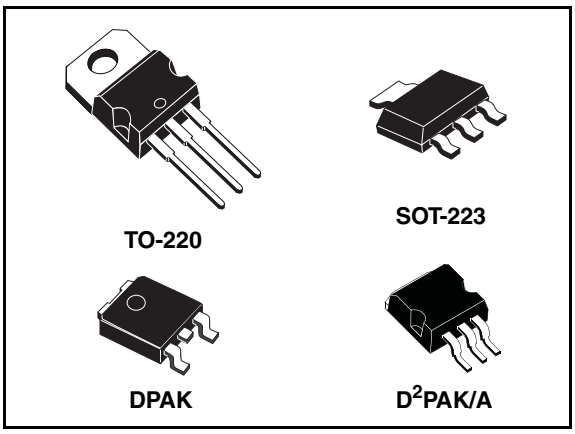

Description

The LD1117A is a LOW DROP Voltage Regulator able to provide up to 1A of Output Current, available even in adjustable version (Vref=1.25V).

Concerning fixed versions, are offered the following Output Voltages: 1.2V, 1.8V, 2.5V, 2.85V, 3.3V and 5.0V. The 2.85V type is ideal for SCSI-2 lines active termination. The device is supplied in: SOT-223, DPAK, D^2PAK/A and TO-220. Surface mount packages optimize the thermal characteristics even offering a relevant space saving effect. High efficiency is assured by NPN pass transistor. Only a very common 10µF minimum capacitor is needed for stability. Only chip trimming allows the regulator to reach a very tight output voltage tolerance, within ± 2% at 25°C.

Block diagram

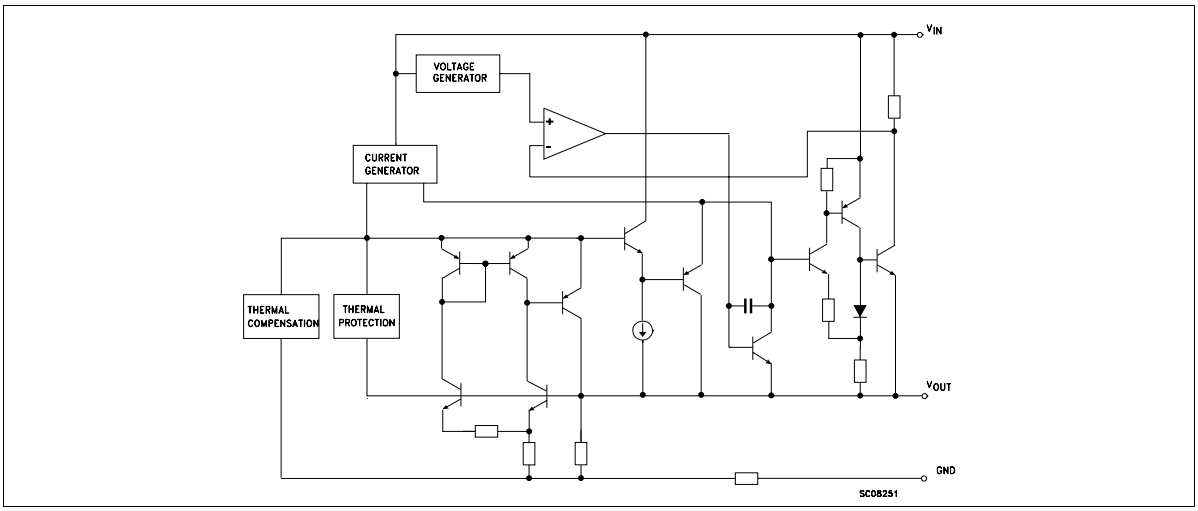

Contents

1 Pin configuration

Figure 1. Pin connections (top view)

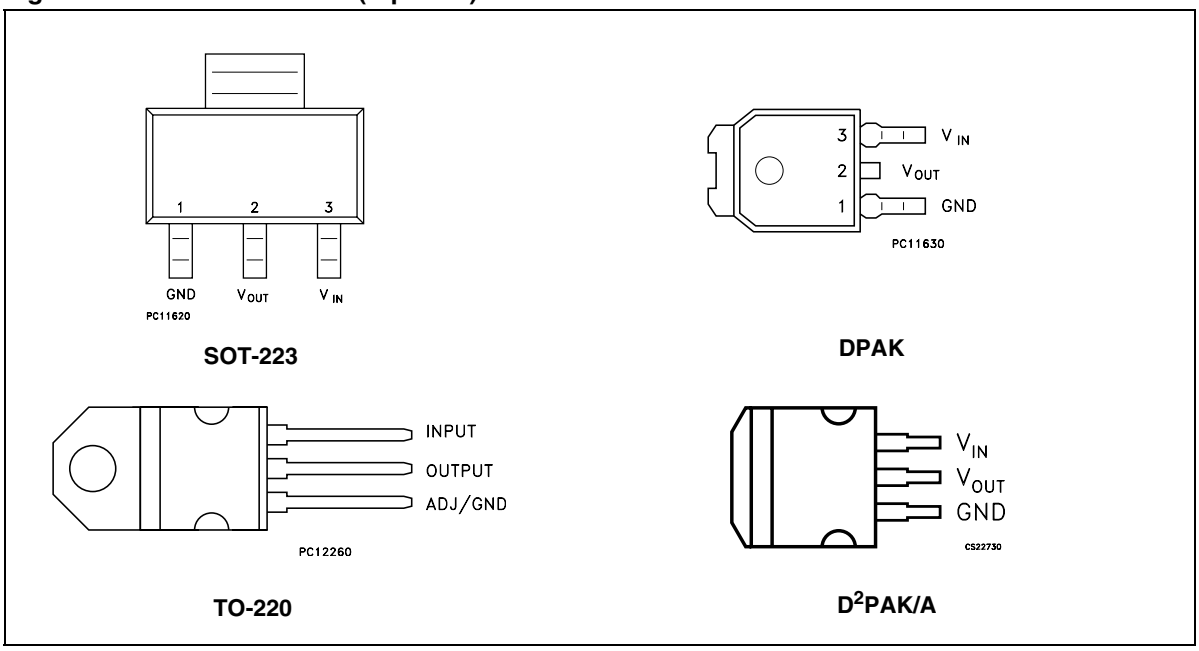

Note: The TAB is connected to the V_{OUT}.

2 Maximum ratings

Table 1. Absolute maximum ratings

Symbol	Parameter	Value	Unit
V_{IN}	DC Input Voltage	15	V
P_{TOT}	Power Dissipation	12	W
T_{STG}	Storage Temperature Range	-40 to +150	°C
T_{OP}	Operating Junction Temperature Range	0 to +125	°C

Note: Absolute Maximum Ratings are those values beyond which damage to the device may occur. Functional operation under these condition is not implied. Over the above suggested Max Power Dissipation a Short Circuit could definitively damage the device.

Table 2. Thermal Data

Symbol	Parameter	SOT-223	D^2PAK/A	DPAK	TO-220	Unit
R_{thJC}	Thermal Resistance Junction-case	15	3	8	3	°C/W
R_{thJA}	Thermal Resistance Junction-ambient				50	°C/W

3 Schematic application

Figure 2. Application circuit (for other fixed output voltages)

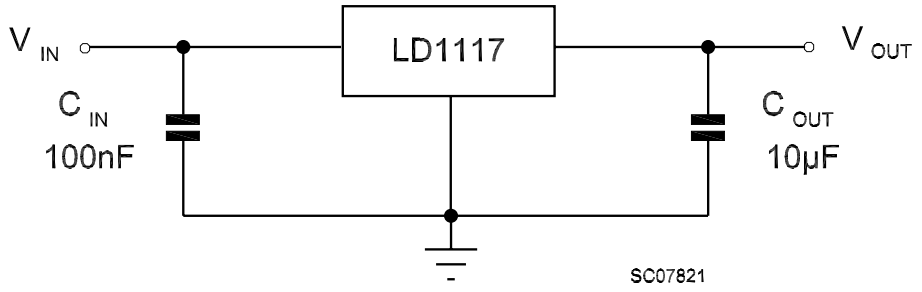

4 Electrical characteristics

Table 3. Electrical characteristics of LD1117A#12
(refer to the test circuits, T_J = 0 to 125°C, C_O = 10 µF, C_I = 10 µF, R = 120 Ω between OUT-GND, unless otherwise specified).

Symbol	Parameter	Test conditions	Min.	Typ.	Max.	Unit
V_O	Output voltage	V_I = 5.3V, I_O = 10mA, T_J = 25°C	1.176	1.2	1.224	V
V_O	Output voltage	I_O = 0 to 1A, V_I = 2.75 to 10V	1.152	1.2	1.248	V
ΔV_O	Line regulation	V_I = 2.75 to 8V, I_O = 0mA		1	6	mV
ΔV_O	Load regulation	V_I = 2.75V, I_O = 0 to 1A		1	10	mV
ΔV_O	Temperature stability			0.5		%
ΔV_O	Long term stability	1000 hrs, T_J = 125°C		0.3		%
V_I	Operating input voltage	I_O = 100mA			10	V
I_d	Quiescent current	$V_I \leq 8V$, I_O = 0mA		5	10	mA
I_O	Output current	V_I - V_O = 5V, T_J = 25°C	1000	1200		mA
eN	Output noise voltage	B =10Hz to 10KHz, T_J = 25°C		100		µV
SVR	Supply voltage rejection	I_O = 40mA, f = 120Hz V_I - V_O = 3V, V_{ripple} = $1V_{PP}$	60	80		dB
V_D	Dropout voltage	I_O = 100mA		1	1.10	V
		I_O = 500mA		1.05	1.15	
		I_O = 1A		1.15	1.30	
$\Delta V_{O(pwr)}$	Thermal regulation	T_a = 25°C, 30ms Pulse		0.08	0.2	%/W

Table 4. Electrical characteristics of LD1117A#18
(refer to the test circuits, T_J = 0 to 125°C, C_O = 10 µF, C_I = 10 µF unless otherwise specified).

Symbol	Parameter	Test conditions	Min.	Typ.	Max.	Unit
V_O	Output voltage	V_I = 3.8V, I_O = 10mA, T_J = 25°C	1.764	1.8	1.836	V
V_O	Output voltage	I_O = 0 to 1A, V_I = 3.3 to 8V	1.728		1.872	V
ΔV_O	Line regulation	V_I = 3.3 to 8V, I_O = 0mA		1	6	mV
ΔV_O	Load regulation	V_I = 3.3V, I_O = 0 to 1A		1	10	mV
ΔV_O	Temperature stability			0.5		%
ΔV_O	Long term stability	1000 hrs, T_J = 125°C		0.3		%
V_I	Operating input voltage	I_O = 100mA			10	V
I_d	Quiescent current	$V_I \leq$8V, I_O = 0mA		5	10	mA
I_O	Output current	V_I - V_O = 5V, T_J = 25°C	1000			mA
eN	Output noise voltage	B =10Hz to 10KHz, T_J = 25°C		100		µV
SVR	Supply voltage rejection	I_O = 40mA, f = 120Hz V_I - V_O = 3V, V_{ripple} = 1V_{PP}	60	80		dB
V_D	Dropout voltage	I_O = 100mA		1	1.10	V
		I_O = 500mA		1.05	1.15	
		I_O = 1A		1.15	1.30	
$\Delta V_{O(pwr)}$	Thermal regulation	T_a = 25°C, 30ms Pulse		0.08	0.2	%/W

Table 5. Electrical characteristics of LD1117A#25
(refer to the test circuits, T_J = 0 to 125°C, C_O = 10 µF, C_I = 10 µF unless otherwise specified).

Symbol	Parameter	Test conditions	Min.	Typ.	Max.	Unit
V_O	Output voltage	V_I = 4.5V, I_O = 10mA, T_J = 25°C	2.45	2.5	2.55	V
V_O	Output voltage	I_O = 0 to 1A, V_I = 3.9 to 8V	2.4		2.6	V
ΔV_O	Line regulation	V_I = 3.9 to 8V, I_O = 0mA		1	6	mV
ΔV_O	Load regulation	V_I = 3.9V, I_O = 0 to 1A		1	10	mV
ΔV_O	Temperature stability			0.5		%
ΔV_O	Long term stability	1000 hrs, T_J = 125°C		0.3		%
V_I	Operating input voltage	I_O = 100mA			10	V
I_d	Quiescent current	$V_I \leq$10V, I_O = 0mA		5	10	mA
I_O	Output current	V_I - V_O = 5V, T_J = 25°C	1000	1200		mA
eN	Output noise voltage	B =10Hz to 10KHz, T_J = 25°C		100		µV
SVR	Supply voltage rejection	I_O = 40mA, f = 120Hz V_I - V_O = 3V, V_{ripple} = 1V_{PP}	60	80		dB
V_D	Dropout voltage	I_O = 100mA		1	1.10	V
		I_O = 500mA		1.05	1.15	
		I_O = 1A		1.15	1.30	
$\Delta V_{O(pwr)}$	Thermal regulation	T_a = 25°C, 30ms Pulse		0.08	0.2	%/W

Table 6. Electrical characteristics of LD1117A#28
(refer to the test circuits, T_J = 0 to 125°C, C_O = 10 µF, C_I = 10 µF unless otherwise specified).

Symbol	Parameter	Test conditions	Min.	Typ.	Max.	Unit
V_O	Output voltage	V_I = 4.85V, I_O = 10mA, T_J = 25°C	2.793	2.85	2.907	V
V_O	Output voltage	I_O = 0 to 1A, V_I = 4.25 to 10V	2.736		2.964	V
ΔV_O	Line regulation	V_I = 4.25 to 8V, I_O = 0mA		1	6	mV
ΔV_O	Load regulation	V_I = 4.25V, I_O = 0 to 1A		1	10	mV
ΔV_O	Temperature stability			0.5		%
ΔV_O	Long term stability	1000 hrs, T_J = 125°C		0.3		%
V_I	Operating input voltage	I_O = 100mA			10	V
I_d	Quiescent current	$V_I \leq$10V, I_O = 0mA		4.5	10	mA
I_O	Output current	V_I - V_O = 5V, T_J = 25°C	1000	1200		mA
eN	Output noise voltage	B =10Hz to 10KHz, T_J = 25°C		100		µV
SVR	Supply voltage rejection	I_O = 40mA, f = 120Hz V_I - V_O = 3V, V_{ripple} = 1V_{PP}	60	75		dB
V_D	Dropout voltage	I_O = 100mA		1	1.10	V
		I_O = 500mA		1.05	1.15	
		I_O = 1A		1.15	1.30	
$\Delta V_{O(pwr)}$	Thermal regulation	T_a = 25°C, 30ms Pulse		0.08	0.2	%/W

Table 7. Electrical characteristics of LD1117A#33
(refer to the test circuits, T_J = 0 to 125°C, C_O = 10 µF, C_I = 10 µF unless otherwise specified).

Symbol	Parameter	Test conditions	Min.	Typ.	Max.	Unit
V_O	Output voltage	V_I = 5.3V, I_O = 10mA, T_J = 25°C	3.234	3.3	3.366	V
V_O	Output voltage	I_O = 0 to 1A, V_I = 4.75 to 10V	3.168		3.432	V
ΔV_O	Line regulation	V_I = 4.75 to 8V, I_O = 0mA		1	6	mV
ΔV_O	Load regulation	V_I = 4.75V, I_O = 0 to 1A		1	10	mV
ΔV_O	Temperature stability			0.5		%
ΔV_O	Long term stability	1000 hrs, T_J = 125°C		0.3		%
V_I	Operating input voltage	I_O = 100mA			10	V
I_d	Quiescent current	$V_I \leq$10V, I_O = 0mA		5	10	mA
I_O	Output current	V_I - V_O = 5V, T_J = 25°C	1000	1200		mA
eN	Output noise voltage	B =10Hz to 10KHz, T_J = 25°C		100		µV
SVR	Supply voltage rejection	I_O = 40mA, f = 120Hz V_I - V_O = 3V, V_{ripple} = 1V_{PP}	60	75		dB
V_D	Dropout voltage	I_O = 100mA		1	1.10	V
		I_O = 500mA		1.05	1.15	
		I_O = 1A		1.15	1.30	
$\Delta V_{O(pwr)}$	Thermal regulation	T_a = 25°C, 30ms Pulse		0.08	0.2	%/W

Table 8. Electrical characteristics of LD1117#50
(refer to the test circuits, T_J = 0 to 125°C, C_O = 10 µF, C_I = 10 µF unless otherwise specified).

Symbol	Parameter	Test conditions	Min.	Typ.	Max.	Unit
V_O	Output voltage	V_I = 7V, I_O = 10mA, T_J = 25°C	4.9	5	5.1	V
V_O	Output voltage	I_O = 0 to 1A, V_I = 6.4 to 10V	4.8		5.2	V
ΔV_O	Line regulation	V_I = 6.4 to 8V, I_O = 0mA		1	6	mV
ΔV_O	Load regulation	V_I = 6.4V, I_O = 0 to 1A		1	10	mV
ΔV_O	Temperature stability			0.5		%
ΔV_O	Long term stability	1000 hrs, T_J = 125°C		0.3		%
V_I	Operating input voltage	I_O = 100mA			10	V
I_d	Quiescent current	$V_I \leq$10V, I_O = 0mA		5	10	mA
I_O	Output current	V_I - V_O = 5V, T_J = 25°C	1000	1200		mA
eN	Output noise voltage	B =10Hz to 10KHz, T_J = 25°C		100		µV
SVR	Supply voltage rejection	I_O = 40mA, f = 120Hz V_I - V_O = 3V, V_{ripple} = 1V_{PP}	60	80		dB
V_D	Dropout voltage	I_O = 100mA		1	1.10	V
		I_O = 500mA		1.05	1.15	
		I_O = 1A		1.15	1.30	
$\Delta V_{O(pwr)}$	Thermal regulation	T_a = 25°C, 30ms Pulse		0.08	0.2	%/W

Table 9. Electrical characteristics of LD1117A (Adjustable)
(refer to the test circuits, T_J = 0 to 125°C, C_O = 10 µF, C_I = 10 µF unless otherwise specified).

Symbol	Parameter	Test conditions	Min.	Typ.	Max.	Unit
V_O	Output voltage	V_I = 5.3V, I_O = 10mA, T_J = 25°C	1.225	1.25	1.275	V
V_O	Output voltage	I_O = 0 to 1A, V_I = 2.75 to 10V	1.2		1.3	V
ΔV_O	Line regulation	V_I = 2.75 to 8V, I_O = 0mA		1	6	mV
ΔV_O	Load regulation	V_I = 2.75V, I_O = 0 to 1A		1	10	mV
ΔV_O	Temperature stability			0.5		%
ΔV_O	Long term stability	1000 hrs, T_J = 125°C		0.3		%
V_I	Operating input voltage	I_O = 100mA			10	V
I_{adj}	Adjustment pin current	V_{in} ≤10 V		60	120	µA
ΔI_{adj}	Adjustment pin current change	V_{in} - V_O = 1.4 to 10 V, I_O = 10mA to 1A		1	5	µA
$I_{O(min)}$	Minimum load current	V_{in} = 10 V		2	5	mA
I_O	Output current	V_I - V_O = 5V, T_J = 25°C	1000	1200		mA
eN	Output noise voltage	B =10Hz to 10KHz, T_J = 25°C		100		µV
SVR	Supply voltage rejection	I_O = 40mA, f = 120Hz V_I - V_O = 3V, V_{ripple} = 1V_{PP}	60	80		dB
V_D	Dropout voltage	I_O = 100mA		1	1.10	V
		I_O = 500mA		1.05	1.15	
		I_O = 1A		1.15	1.30	
$\Delta V_{O(pwr)}$	Thermal regulation	T_a = 25°C, 30ms Pulse		0.08	0.2	%/W

5 Typical application

Figure 3. Negative supply

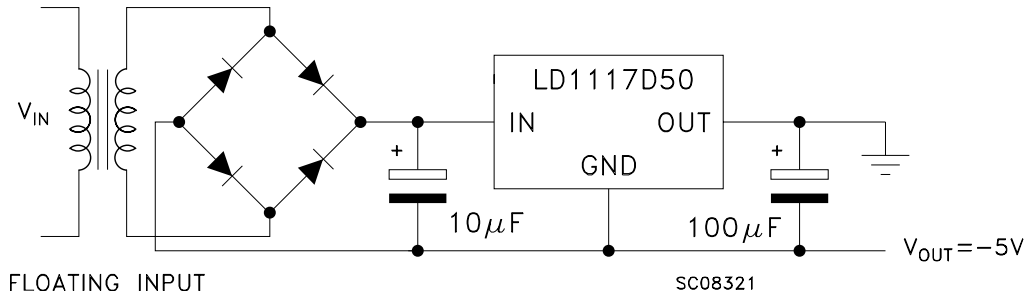

Figure 4. Active terminator for SCSI-2 BUS

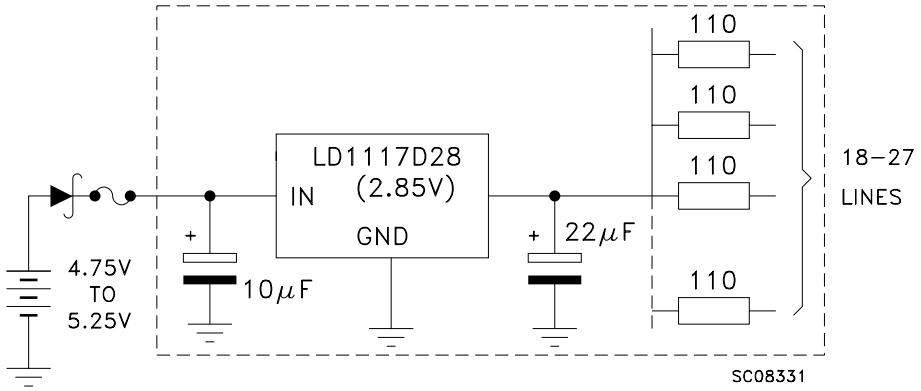

Figure 5. Circuit for increasing output voltage

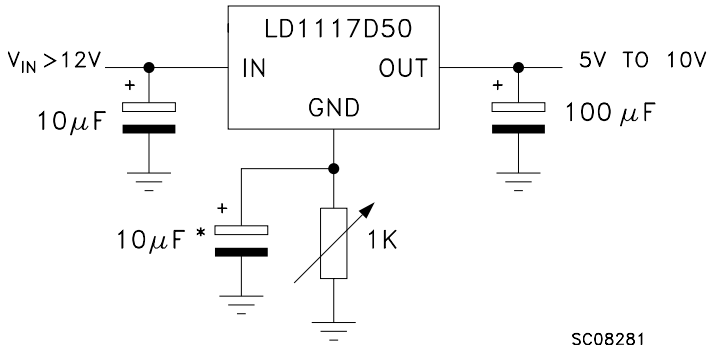

Figure 6. Voltage Regulator With Reference

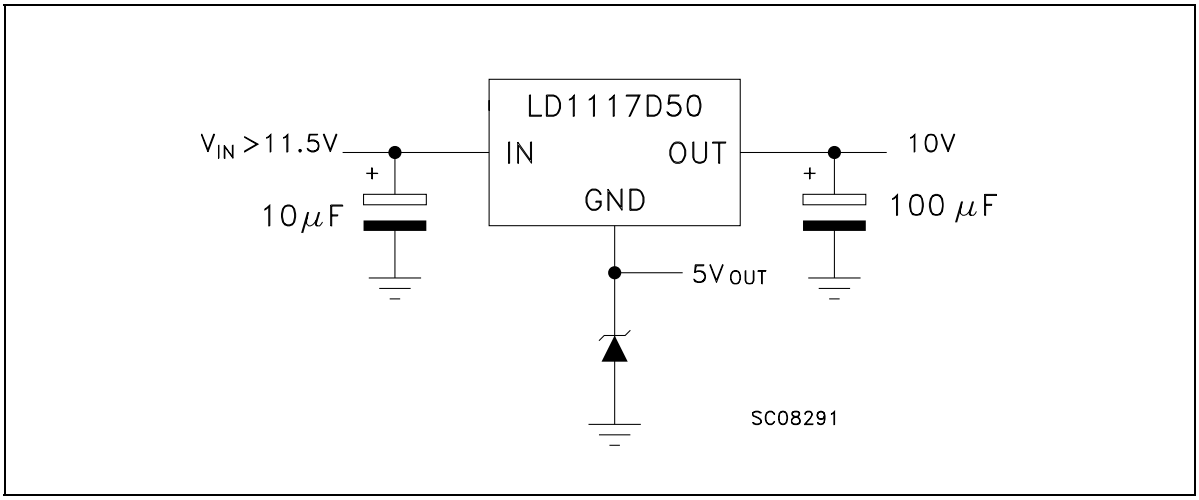

Figure 7. Battery backed-up regulated supply

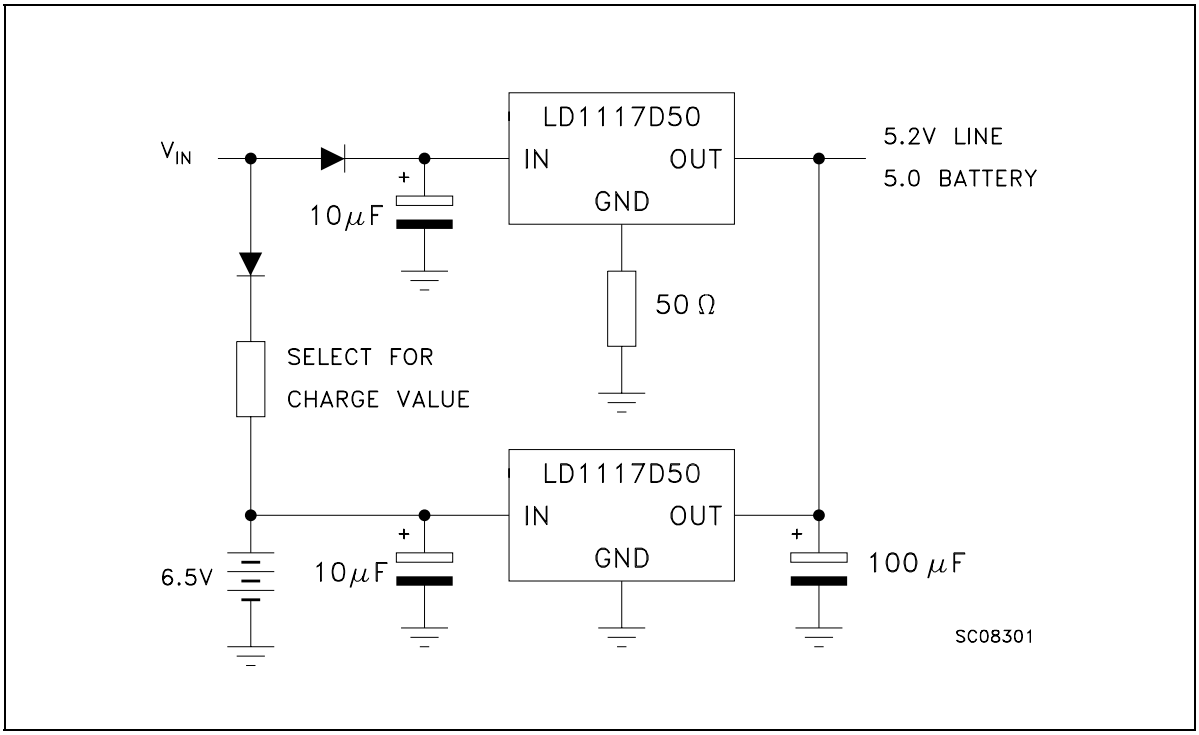

Figure 8. Post-regulated dual supply

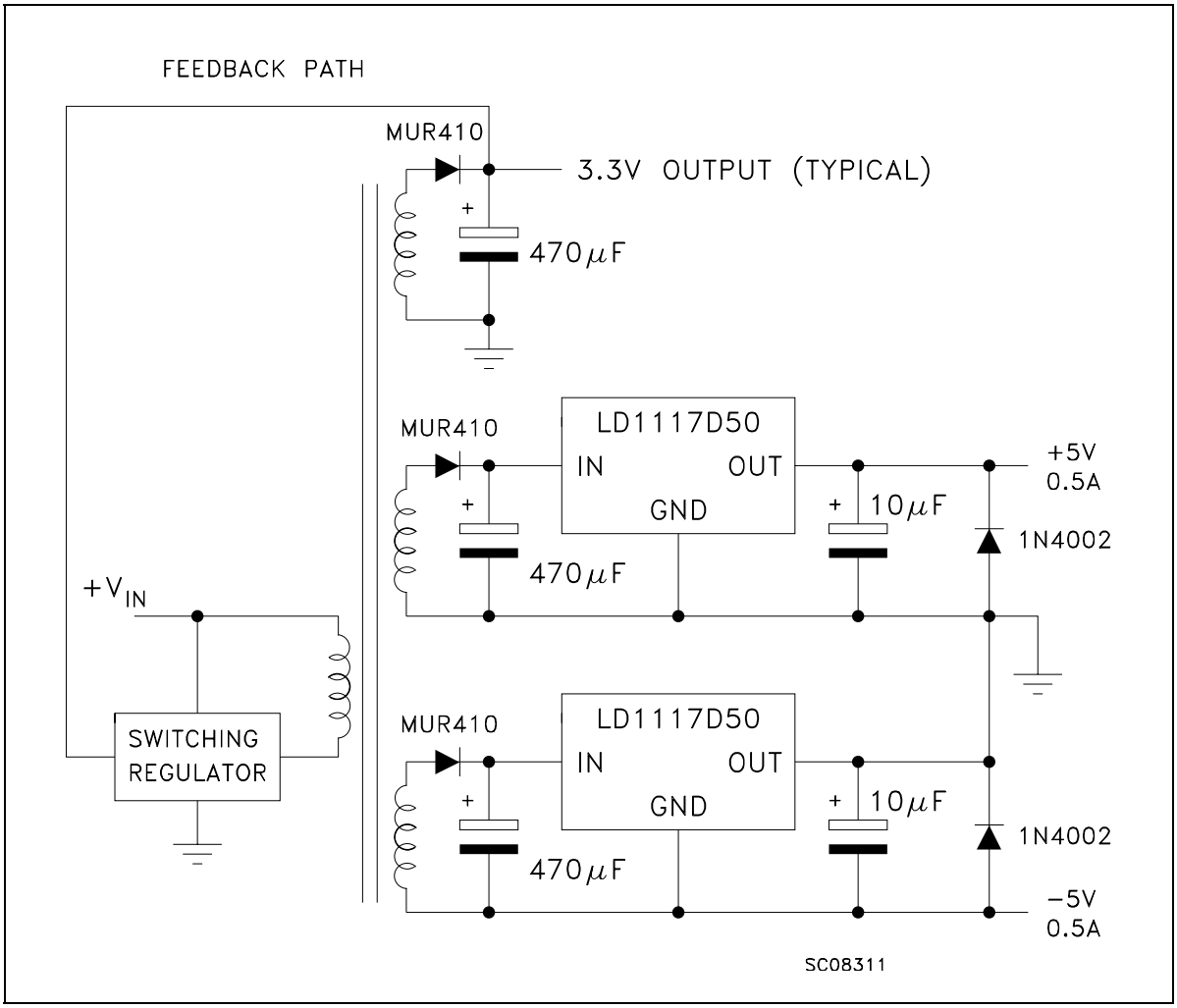

6 LD1117A Adjustable: Application note

The LD1117 Adjustable has a thermal stabilized 1.25±0.012V reference voltage between the OUT and ADJ pins. I_{ADJ} is 60µA typ. (120µA max.) and ΔI_{ADJ} is 1µA typ. (5µA max.).

R1 is normally fixed to 120Ω From *Figure 6.* we obtain:

$V_{OUT} = V_{REF} + R2\ (I_{ADJ} + I_{R1}) = V_{REF} + R2\ (I_{ADJ} + V_{REF} / R_1) = V_{REF}\ (1 + R2 / R_1) + R2 \times I_{ADJ}$.

In normal application R2 value is in the range of few kΩ, so the R2 x I_{ADJ} product could not be considered in the V_{OUT} calculation; then the above expression becomes:

$V_{OUT} = V_{REF}\ (1 + R2 / R1)$.

In order to have the better load regulation it is important to realize a good Kelvin connection of R1 and R2 resistors. In particular R1 connection must be realized very close to OUT and ADJ pin, while R2 ground connection must be placed as near as possible to the negative Load pin. Ripple rejection can be improved by introducing a 10µF electrolytic capacitor placed in parallel to the R2 resistor (see *Figure 9.*).

Figure 9. Adjustable output voltage application

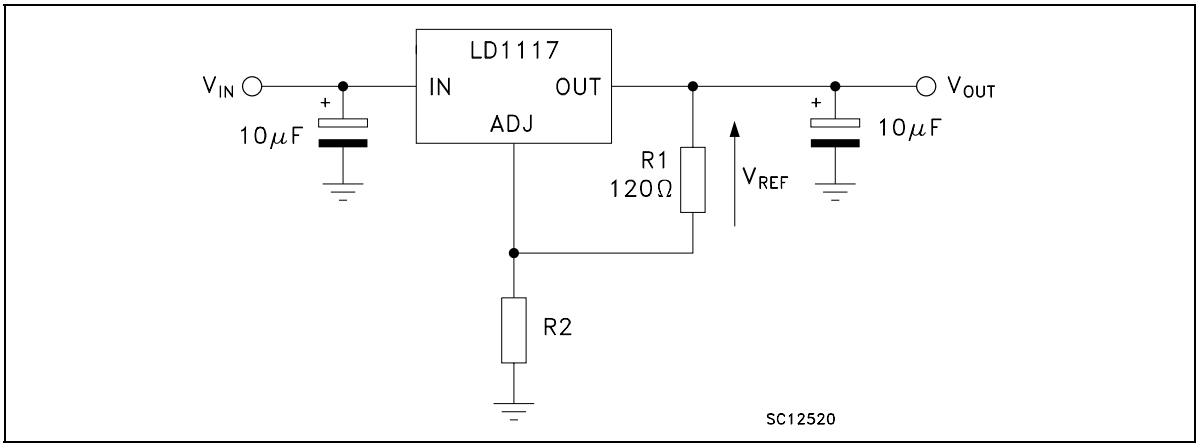

Figure 10. Adjustable output voltage application with improved ripple rejection

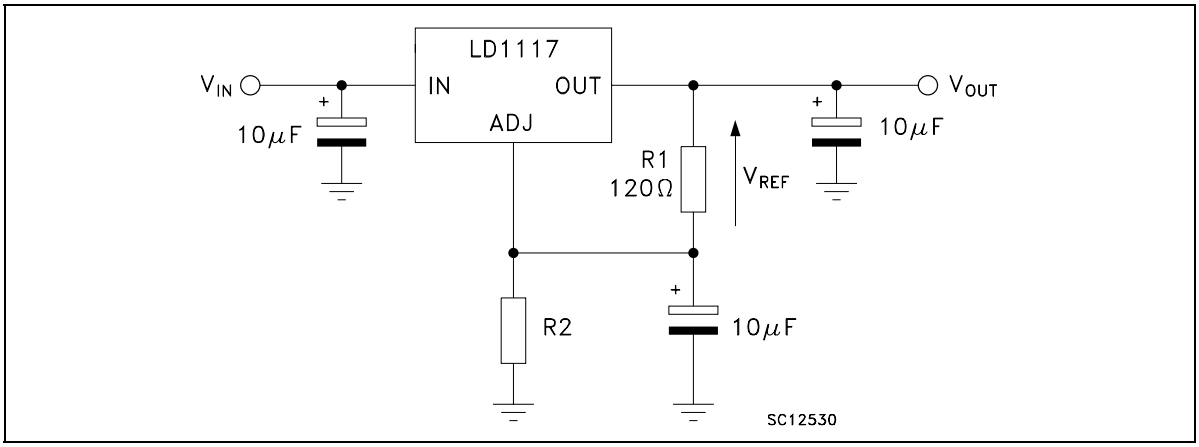

7 Package mechanical data

In order to meet environmental requirements, ST offers these devices in ECOPACK® packages. These packages have a Lead-free second level interconnect. The category of second Level Interconnect is marked on the package and on the inner box label, in compliance with JEDEC Standard JESD97. The maximum ratings related to soldering conditions are also marked on the inner box label. ECOPACK is an ST trademark. ECOPACK specifications are available at: www.st.com.

SOT-223 MECHANICAL DATA

DIM.	mm.			mils		
	MIN.	TYP	MAX.	MIN.	TYP.	MAX.
A			1.8			70.9
A1	0.02		0.1	0.8		3.9
B	0.6	0.7	0.85	23.6	27.6	33.5
B1	2.9	3	3.15	114.2	118.1	124.0
c	0.24	0.26	0.35	9.4	10.2	13.8
D	6.3	6.5	6.7	248.0	255.9	263.8
e		2.3			90.6	
e1		4.6			181.1	
E	3.3	3.5	3.7	129.9	137.8	145.7
H	6.7	7	7.3	263.8	275.7	287.5
V			10°			10°

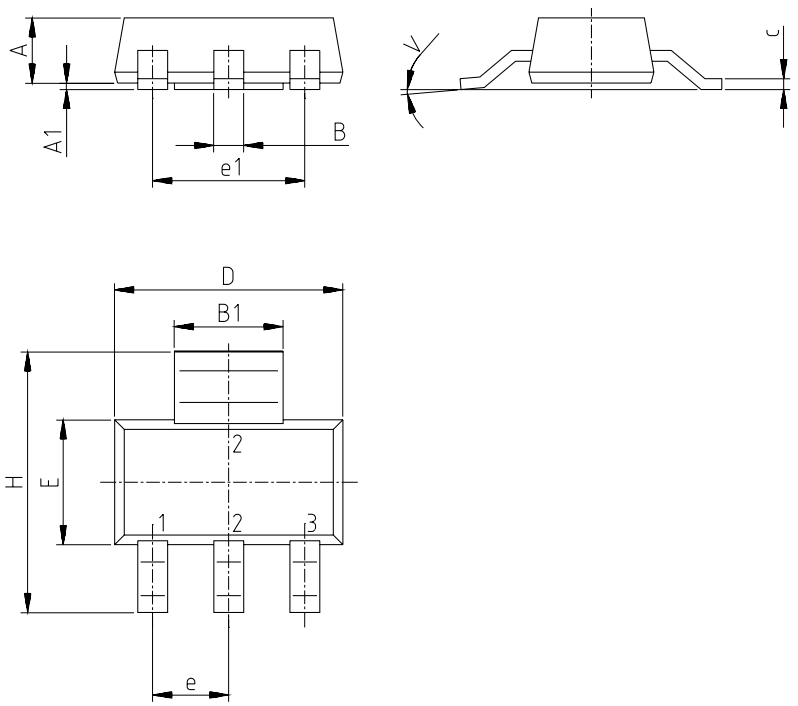

0046067/H

TO-220 MECHANICAL DATA

DIM.	mm.			inch		
	MIN.	TYP	MAX.	MIN.	TYP.	MAX.
A	4.40		4.60	0.173		0.181
C	1.23		1.32	0.048		0.051
D	2.40		2.72	0.094		0.107
D1		1.27			0.050	
E	0.49		0.70	0.019		0.027
F	0.61		0.88	0.024		0.034
F1	1.14		1.70	0.044		0.067
F2	1.14		1.70	0.044		0.067
G	4.95		5.15	0.194		0.203
G1	2.4		2.7	0.094		0.106
H2	10.0		10.40	0.393		0.409
L2		16.4			0.645	
L4	13.0		14.0	0.511		0.551
L5	2.65		2.95	0.104		0.116
L6	15.25		15.75	0.600		0.620
L7	6.2		6.6	0.244		0.260
L9	3.5		3.93	0.137		0.154
DIA.	3.75		3.85	0.147		0.151

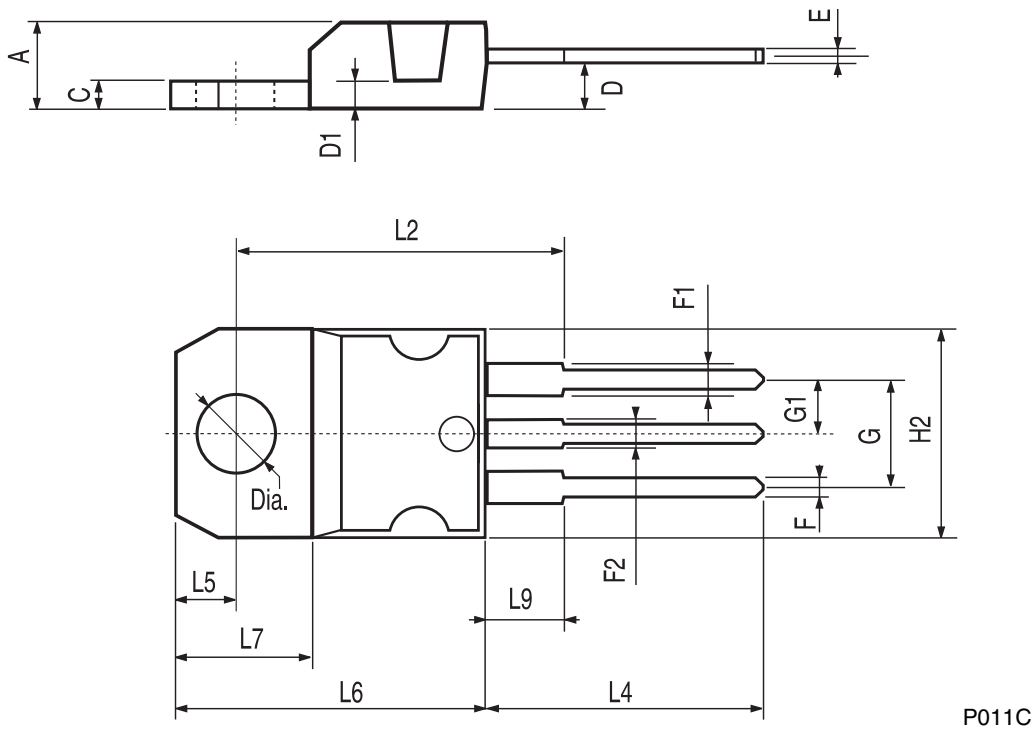

Figure 11. DRAWING DIMENSION D²PAK/A (TYPE STD-ST)

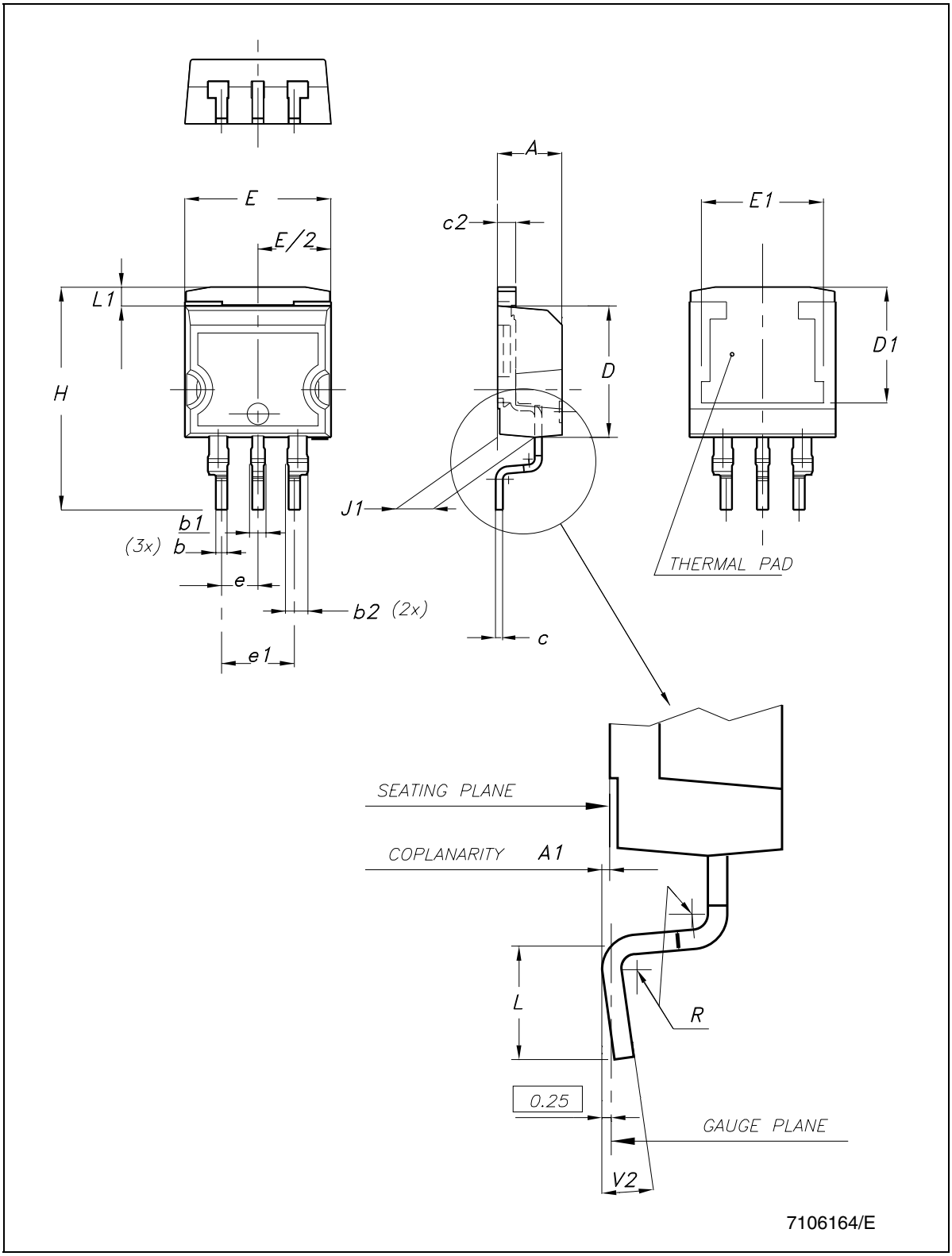

Figure 12. DRAWING DIMENSION D²PAK/A (TYPE WOOSEOK-SUBCON.)

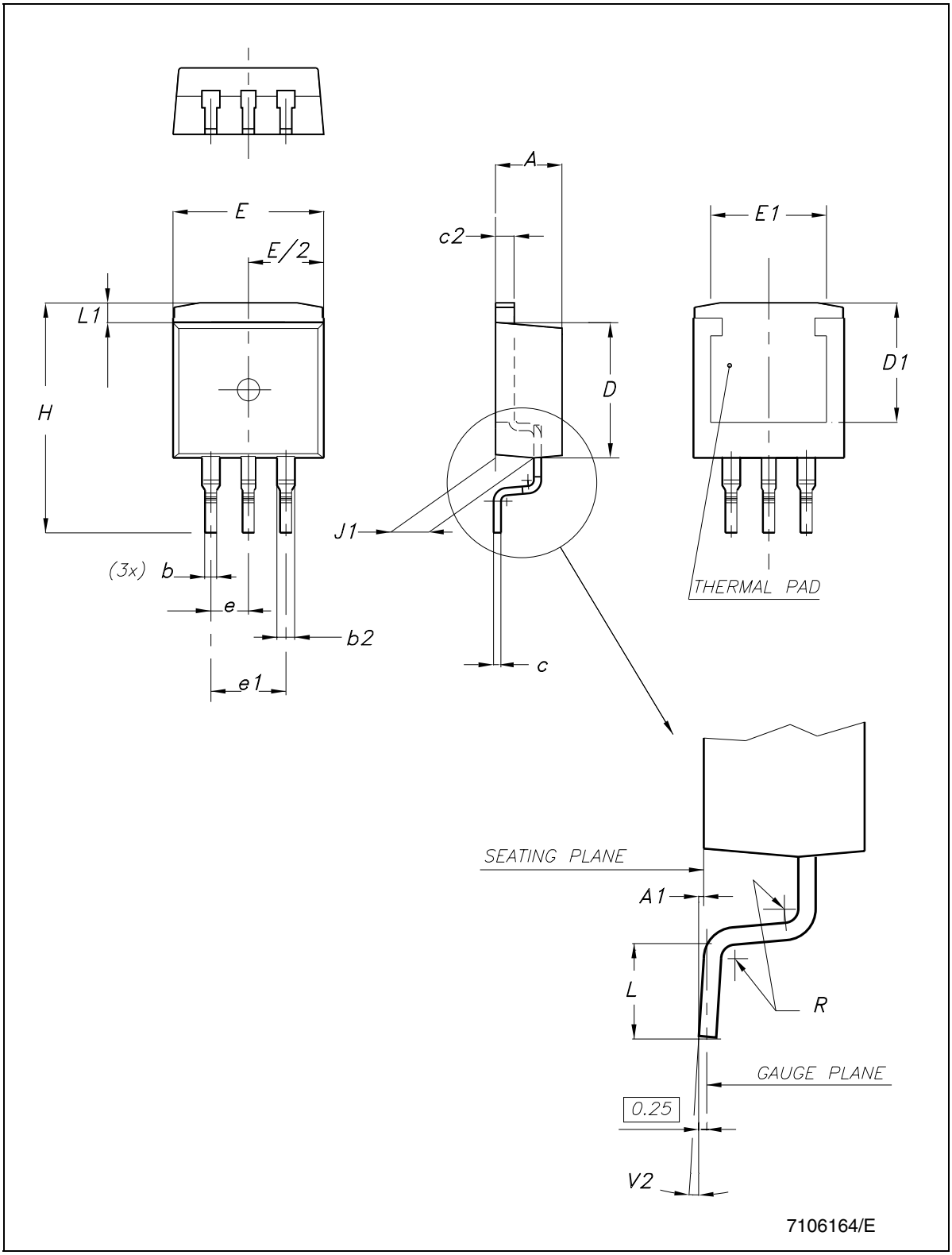

Table 10. D²PAK/A MECHANICAL DATA

DIM.	TYPE STD-ST			TYPE WOOSEOK-SUBCON.		
	mm.			mm.		
	MIN.	TYP.	MAX.	MIN.	TYP.	MAX.
A	4.40		4.60	4.30		4.70
A1	0.03		0.23	0		0.20
b	0.70		0.93	0.70		0.90
b1	0.80		1.30			
b2	1.14		1.70	1.17		1.37
c	0.45		0.60	0.45	0.50	0.60
c2	1.23		1.36	1.25	1.30	1.40
D	8.95		9.35	9	9.20	9.40
D1	7.50			7.50		
E	10		10.40	9.80		10.20
E1	8.50			7.50		
e		2.54			2.54	
e1	4.88		5.28		5.08	
H	15		15.85	15	15.30	15.60
J1	2.49		2.69	2.20		2.60
L	2.29		2.79	1.79		2.79
L1	1.27		1.40	1		1.40
R		0.4			0.30	
V2	0°		8°	0°		3°

Note: The D²PAK/A package coming from the subcontractor Wooseok is fully compatible with the ST's package suggested footprint.

Figure 13. D²PAK/A FOOTPRINT RECOMMENDED DATA

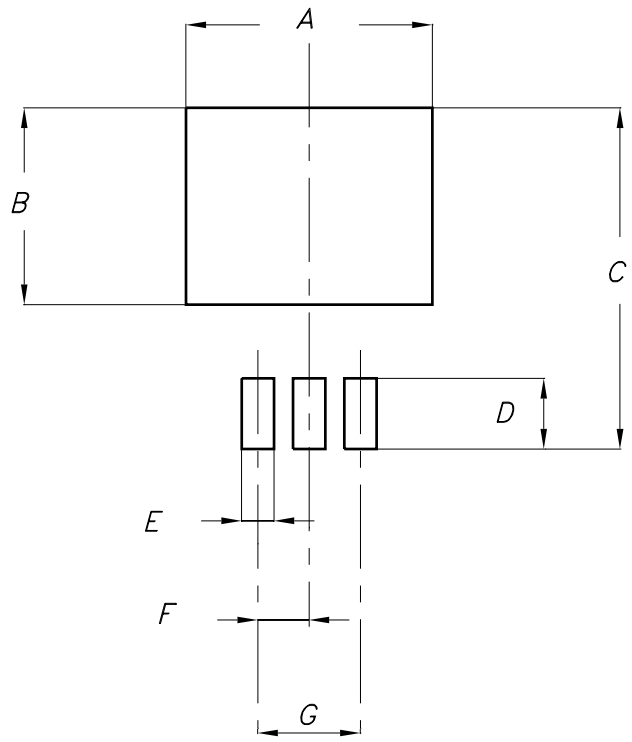

Table 11. FOOTPRINT DATA

VALUES		
	mm.	inch.
A	12.20	0.480
B	9.75	0.384
C	16.90	0.665
D	3.50	0.138
E	1.60	0.063
F	2.54	0.100
G	5.08	0.200

DPAK MECHANICAL DATA

DIM.	mm.			inch		
	MIN.	TYP	MAX.	MIN.	TYP.	MAX.
A	2.2		2.4	0.086		0.094
A1	0.9		1.1	0.035		0.043
A2	0.03		0.23	0.001		0.009
B	0.64		0.9	0.025		0.035
b4	5.2		5.4	0.204		0.212
C	0.45		0.6	0.017		0.023
C2	0.48		0.6	0.019		0.023
D	6		6.2	0.236		0.244
D1		5.1			0.200	
E	6.4		6.6	0.252		0.260
E1		4.7			0.185	
e		2.28			0.090	
e1	4.4		4.6	0.173		0.181
H	9.35		10.1	0.368		0.397
L	1			0.039		
(L1)		2.8			0.110	
L2		0.8			0.031	
L4	0.6		1	0.023		0.039
R		0.2			0.008	
V2	0°		8°	0°		8°

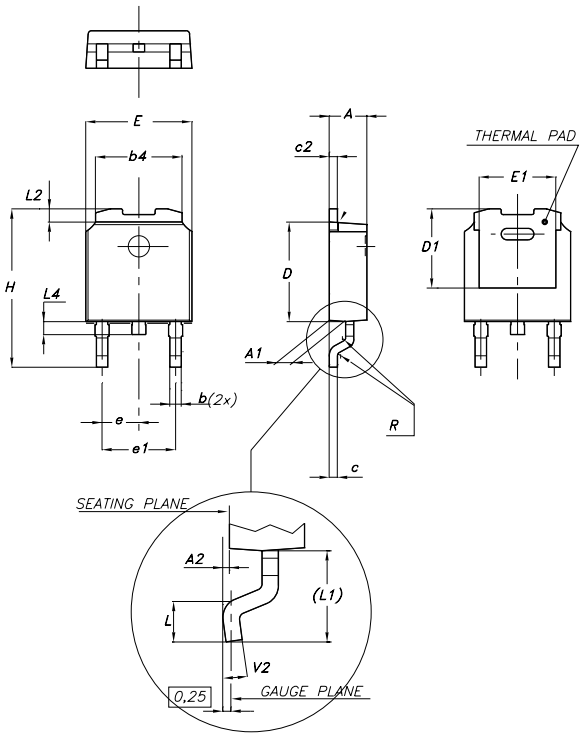

0068772-F

Tape & Reel SOT223 MECHANICAL DATA

DIM.	mm.			inch		
	MIN.	TYP	MAX.	MIN.	TYP.	MAX.
A			330			12.992
C	12.8	13.0	13.2	0.504	0.512	0.519
D	20.2			0.795		
N	60			2.362		
T			14.4			0.567
Ao	6.73	6.83	6.93	0.265	0.269	0.273
Bo	7.32	7.42	7.52	0.288	0.292	0.296
Ko	1.78		2	0.070		0.078
Po	3.9	4.0	4.1	0.153	0.157	0.161
P	7.9	8.0	8.1	0.311	0.315	0.319

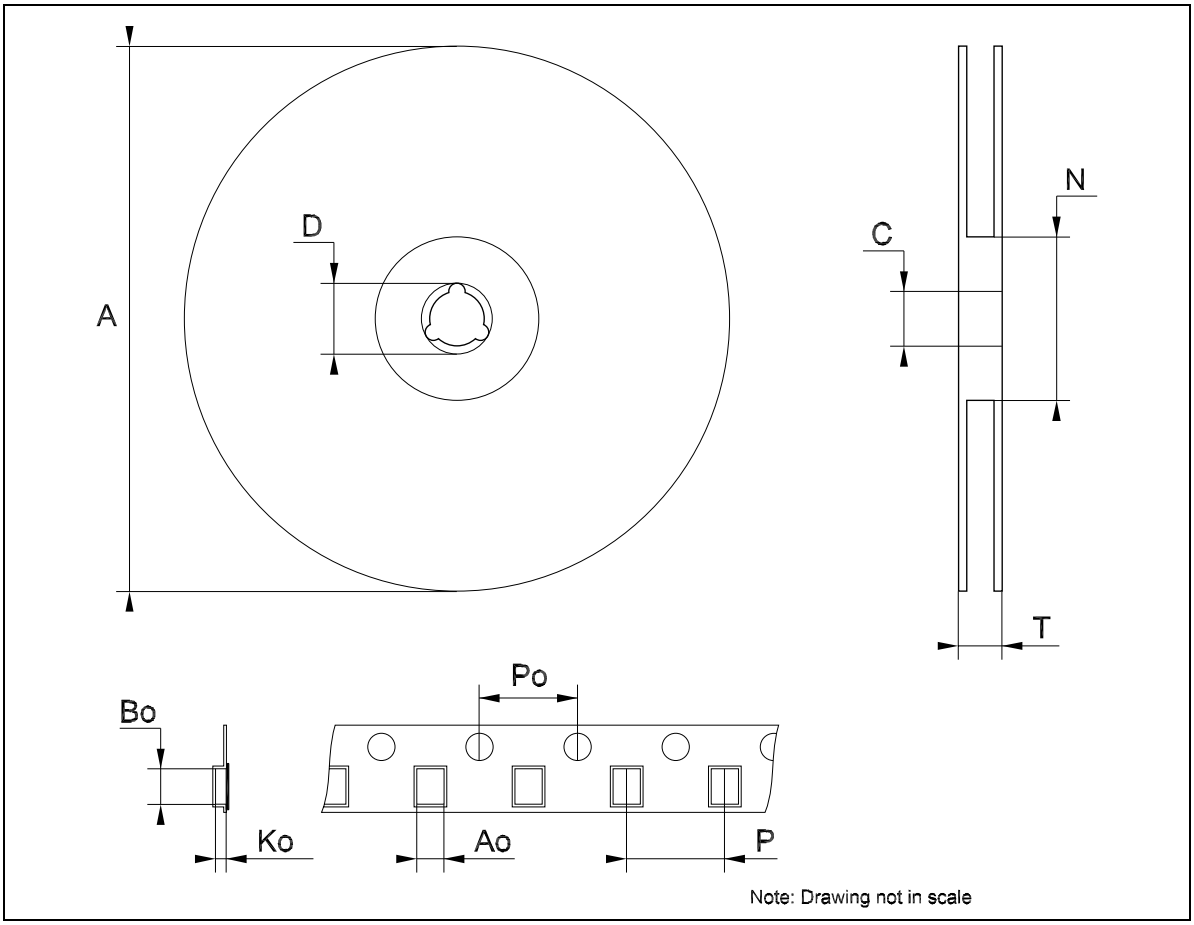

Tape & Reel DPAK-PPAK MECHANICAL DATA

DIM.	mm.			inch		
	MIN.	TYP	MAX.	MIN.	TYP.	MAX.
A			330			12.992
C	12.8	13.0	13.2	0.504	0.512	0.519
D	20.2			0.795		
N	60			2.362		
T			22.4			0.882
Ao	6.80	6.90	7.00	0.268	0.272	0.2.76
Bo	10.40	10.50	10.60	0.409	0.413	0.417
Ko	2.55	2.65	2.75	0.100	0.104	0.105
Po	3.9	4.0	4.1	0.153	0.157	0.161
P	7.9	8.0	8.1	0.311	0.315	0.319

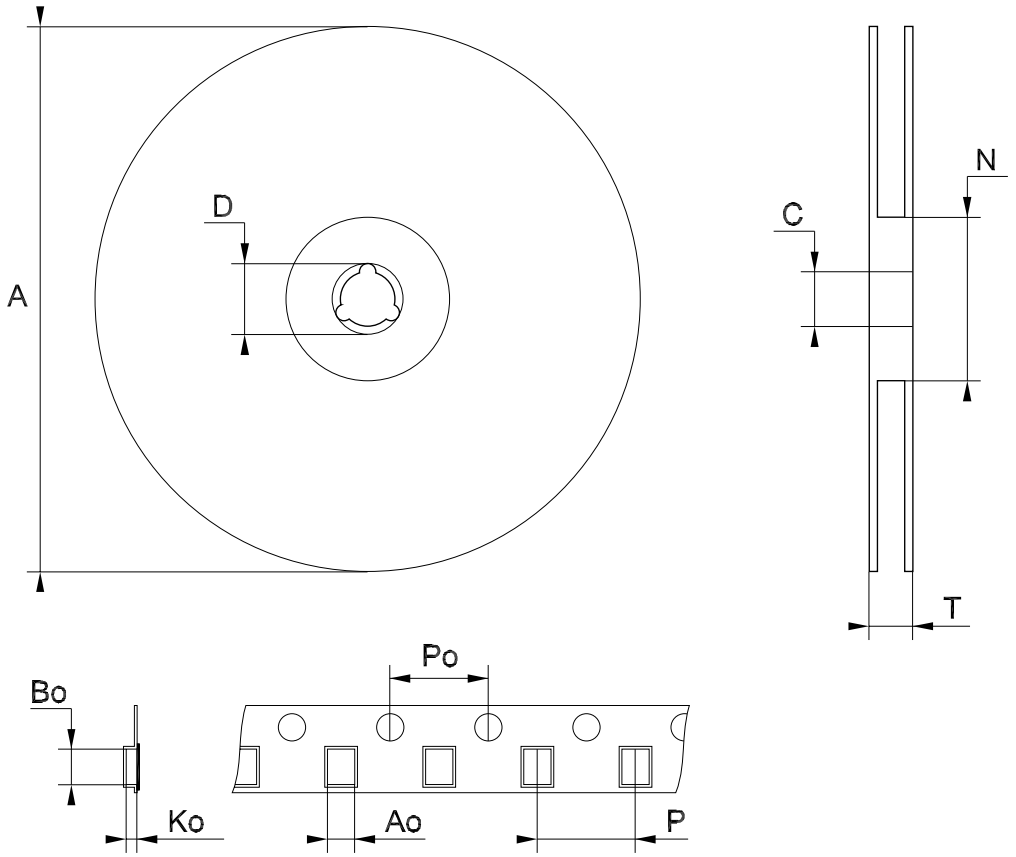

Note: Drawing not in scale

Tape & Reel D^{2}PAK-P^{2}PAK-D^{2}PAK/A-P^{2}PAK/A MECHANICAL DATA

DIM.	mm.			inch		
	MIN.	TYP	MAX.	MIN.	TYP.	MAX.
A			180			7.086
C	12.8	13.0	13.2	0.504	0.512	0.519
D	20.2			0.795		
N	60			2.362		
T			14.4			0.567
Ao	10.50	10.6	10.70	0.413	0.417	0.421
Bo	15.70	15.80	15.90	0.618	0.622	0.626
Ko	4.80	4.90	5.00	0.189	0.193	0.197
Po	3.9	4.0	4.1	0.153	0.157	0.161
P	11.9	12.0	12.1	0.468	0.472	0.476

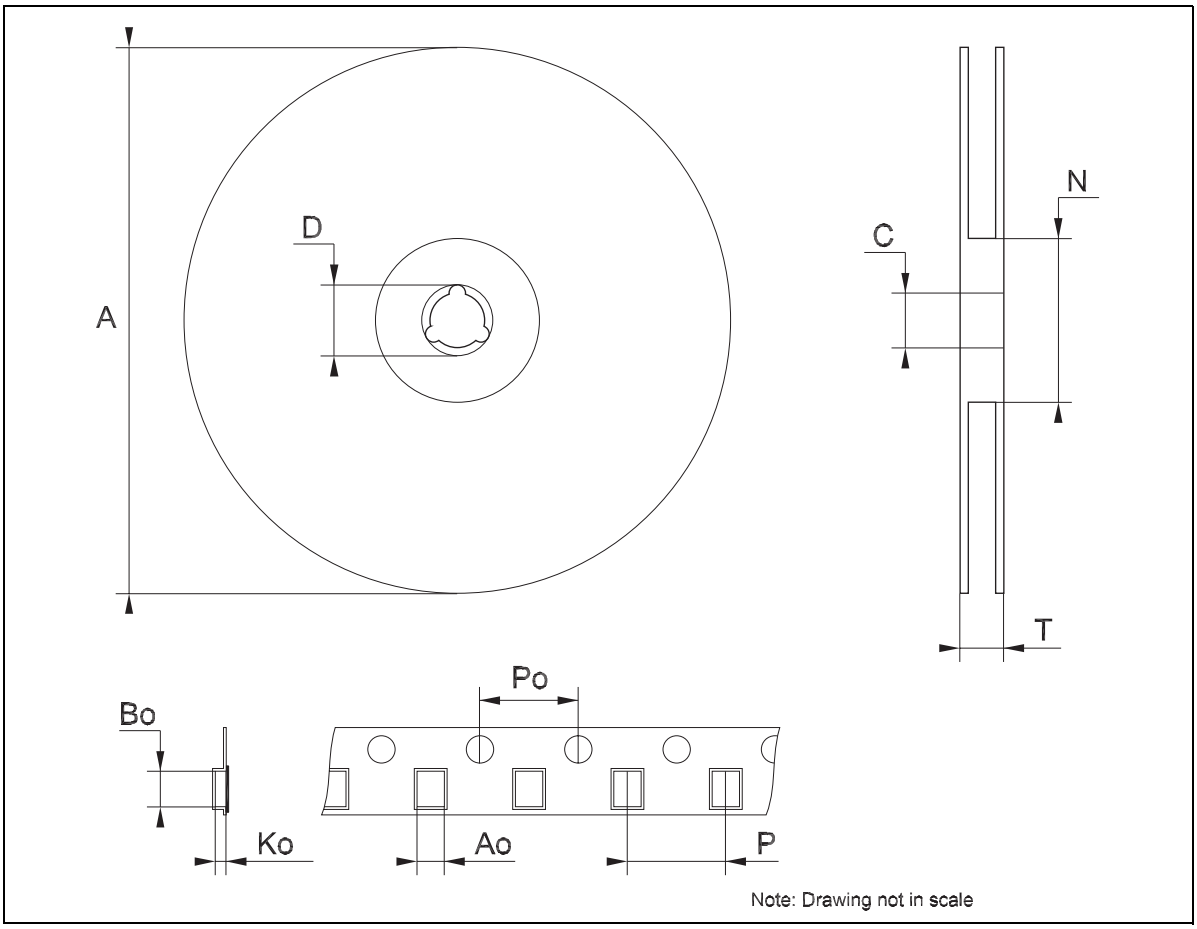

8 Order codes

Table 12. Order codes

Part numbers				
Packages				Output voltage
SOT-223	DPAK	D^2PAK/A	TO-220	
LD1117AS12TR	LD1117ADT12TR		LD1117AV12(1)	1.2 V
LD1117AS18TR	LD1117ADT18TR		LD1117AV18	1.8 V
LD1117AS25TR	LD1117ADT25TR		LD1117AV25	2.5 V
LD1117AS28TR(1)	LD1117ADT28TR(1)		LD1117AV28(1)	2.85 V
LD1117AS33TR	LD1117ADT33TR		LD1117AV33	3.3 V
LD1117AS50TR(1)	LD1117ADT50TR(1)		LD1117AV50(1)	5 V
LD1117ASTR	LD1117ADT-TR	LD1117AD2MTR	LD1117AV	Adjustable from 1.25 to 15V

1. Available on request.

9 Revision history

Table 13. Revision history

Date	Revision	Changes
29-Sep-2004	11	Add new Part Number #12.
12-Oct-2004	12	Mistake V_O max. - Table 4.
21-Apr-2005	13	Add new package - D^2PAK/A.
05-Jul-2005	14	The DPAK Mechanical Data has been updated.
10-Feb-2006	15	Add new package - D^2PAK/A (B Type).
20-Dec-2006	16	Change value V_{IN} on *Table 1.* and the document has been reformatted.
19-Jan-2007	17	D^2PAK/A mechanical data has been updated and add footprint data.
28-May-2007	18	Add I_{ADJ} and ΔI_{ADJ} values on *Table 9.*
07-Jun-2007	19	Add $I_{O(min)}$ value on *Table 9.*

Please Read Carefully:

Information in this document is provided solely in connection with ST products. STMicroelectronics NV and its subsidiaries (“ST”) reserve the right to make changes, corrections, modifications or improvements, to this document, and the products and services described herein at any time, without notice.

All ST products are sold pursuant to ST’s terms and conditions of sale.

Purchasers are solely responsible for the choice, selection and use of the ST products and services described herein, and ST assumes no liability whatsoever relating to the choice, selection or use of the ST products and services described herein.

No license, express or implied, by estoppel or otherwise, to any intellectual property rights is granted under this document. If any part of this document refers to any third party products or services it shall not be deemed a license grant by ST for the use of such third party products or services, or any intellectual property contained therein or considered as a warranty covering the use in any manner whatsoever of such third party products or services or any intellectual property contained therein.

UNLESS OTHERWISE SET FORTH IN ST’S TERMS AND CONDITIONS OF SALE ST DISCLAIMS ANY EXPRESS OR IMPLIED WARRANTY WITH RESPECT TO THE USE AND/OR SALE OF ST PRODUCTS INCLUDING WITHOUT LIMITATION IMPLIED WARRANTIES OF MERCHANTABILITY, FITNESS FOR A PARTICULAR PURPOSE (AND THEIR EQUIVALENTS UNDER THE LAWS OF ANY JURISDICTION), OR INFRINGEMENT OF ANY PATENT, COPYRIGHT OR OTHER INTELLECTUAL PROPERTY RIGHT.

UNLESS EXPRESSLY APPROVED IN WRITING BY AN AUTHORIZED ST REPRESENTATIVE, ST PRODUCTS ARE NOT RECOMMENDED, AUTHORIZED OR WARRANTED FOR USE IN MILITARY, AIR CRAFT, SPACE, LIFE SAVING, OR LIFE SUSTAINING APPLICATIONS, NOR IN PRODUCTS OR SYSTEMS WHERE FAILURE OR MALFUNCTION MAY RESULT IN PERSONAL INJURY, DEATH, OR SEVERE PROPERTY OR ENVIRONMENTAL DAMAGE. ST PRODUCTS WHICH ARE NOT SPECIFIED AS "AUTOMOTIVE GRADE" MAY ONLY BE USED IN AUTOMOTIVE APPLICATIONS AT USER’S OWN RISK.

Resale of ST products with provisions different from the statements and/or technical features set forth in this document shall immediately void any warranty granted by ST for the ST product or service described herein and shall not create or extend in any manner whatsoever, any liability of ST.

ST and the ST logo are trademarks or registered trademarks of ST in various countries.

Information in this document supersedes and replaces all information previously supplied.

The ST logo is a registered trademark of STMicroelectronics. All other names are the property of their respective owners.

STMicroelectronics group of companies

Australia - Belgium - Brazil - Canada - China - Czech Republic - Finland - France - Germany - Hong Kong - India - Israel - Italy - Japan - Malaysia - Malta - Morocco - Singapore - Spain - Sweden - Switzerland - United Kingdom - United States of America

www.st.com