SC1202 & SC1202A
600mA Low Dropout Positive Voltage Regulator

POWER MANAGEMENT

Description

The SC1202 series of high performance positive voltage regulators are designed for use in applications requiring low dropout performance at full rated current. Additionally, the SC1202 series provides excellent regulation over variations due to line, load and temperature.

Outstanding features include low dropout performance at rated current, fast transient response, internal current limiting and thermal shutdown protection of the output device. The SC1202 series are three terminal regulators available in the surface mount SOT-223 package.

Features

- Low dropout performance, 1.3V max.
- Full current rating over line and temperature
- Fast transient response
- ±2% total output regulation over line, load and temperature
- Adjust pin current max. 90µA over temperature
- Adjustable or fixed output voltages
- Line regulation 0.2% max.
- Load regulation 0.4% max.
- SOT-223 package

Applications

- Low voltage microcontrollers
- Microprocessor I/O supplies
- 5V to 3.3V conversion for memory, ASIC, custom circuits, etc.

Typical Application Circuits

Fixed Voltage Regulator

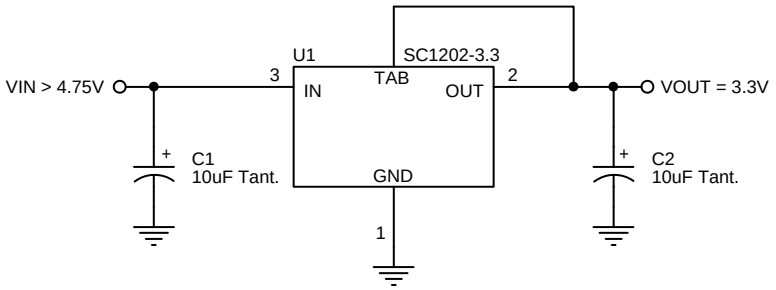

Adjustable Voltage Regulator

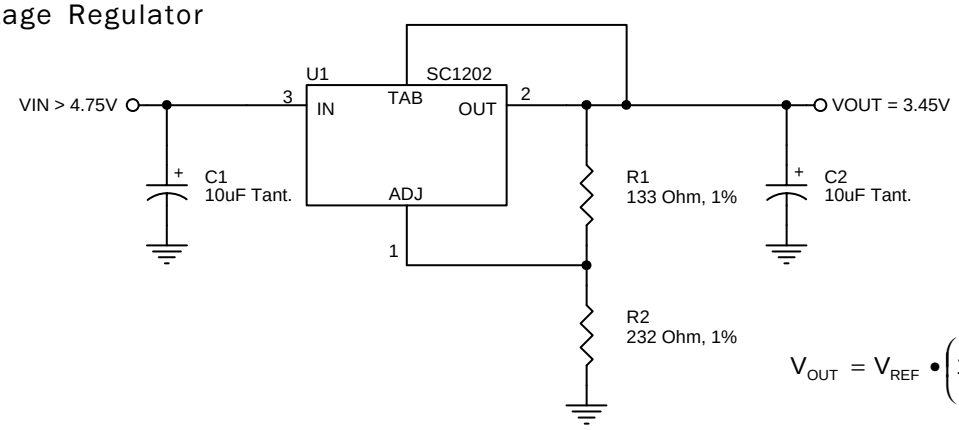

$$V_{OUT} = V_{REF} \bullet \left(1 + \frac{R2}{R1}\right) + I_{ADJ} \bullet R2$$

Notes:

(1) C1 needed if device is far from filter capacitors

(2) C2 minimum value required for stability

Downloaded from Elcodis.com electronic components distributor

Absolute Maximum Ratings

Parameter	Symbol	Maximum	Units
Input Voltage SC1202 SC1202A	V_{IN}	7 16	V
Power Dissipation	P_D	Internally Limited	W
Thermal Resistance, Junction to Case	θ_{JC}	15	°C/W
Thermal Resistance, Junction to Ambient	θ_{JA}	156	°C/W
Operating Ambient Temperature Range	T_A	0 to 70	°C
Operating Junction Temperature Range	T_J	0 to 125	°C
Storage Temperature Range	T_{STG}	-65 to 150	°C
Lead Temperature (Soldering) 10 seconds	T_{LEAD}	300	°C
ESD Rating (Human Body Model)	ESD	2	kV

Electrical Characteristics

Unless otherwise specified, Adj. V_{IN} = 2.65 to 7V (15.0V for "A" version) and Adj. I_O = 10mA to 600mA;
Fixed V_{IN} = 4.75 to 7V (15.0V for "A" version) and Fixed I_O = 0mA to 600mA

Parameter	Symbol	V_{IN}	I_o	T_J (4)	Min	Typ	Max	Units
Output Voltage (1)	V_O	5V	0mA	25°C	3.265	3.300	3.335	V
Fixed Voltage Option				O.T.	3.230	3.300	3.369	
Reference Voltage (1)	V_{REF}	5V	10mA	25°C	1.238	1.250	1.262	V
Adj. Voltage Version				O.T.	1.225	1.250	1.275	
Line Regulation (1)	$REG_{(LINE)}$		10mA	O.T.		0.035	0.2	%
Load Regulation (1)	$REG_{(LOAD)}$	5V		O.T.		0.2	0.4	%
Dropout Voltage ΔV_{OUT}, ΔV_{REF} = 1%	V_D			O.T.		1.2	1.3	V
Current Limit	I_{CL}			O.T.	600			mA
Quiescent Current Fixed Voltage Version	I_Q	5V		O.T.		10	13	mA
Temperature Coefficient	T_C			O.T.		0.005		%/°C
Adjust Pin Current	I_{ADJ}			O.T.		55	90	µA
Adjust Pin Current Change	ΔI_{ADJ}			O.T.		0.2	5.0	µA

Downloaded from Elcodis.com electronic components distributor

Electrical Characteristics (Cont.)

Unless otherwise specified, Adj. V_{IN} = 2.65 to 7V (15.0V for "A" version) and Adj. I_O = 10mA to 600mA;
Fixed V_{IN} = 4.75 to 7V (15.0V for "A" version) and Fixed I_O = 0mA to 600mA

Parameter	Symbol	V_{IN}	I_o	T_J (4)	Min	Typ	Max	Units
Temperature Stability	T_S			O.T.		0.5		%
Minimum Load Current Adj. Voltage Version	$I_{O(MIN)}$	5V		O.T		5	10	mA
RMS Output Noise(2)	V_N			25°C		0.003		$\%V_O$
Ripple Rejection Ratio(3)	R_A	5V	600mA	O.T.	60	72		dB

NOTES:

(1) Low duty cycle pulse testing with Kelvin connections required.
(2) Bandwidth of 10 Hz to 10 kHz.
(3) 120 Hz input ripple, (C_{ADJ} for ADJ = 25µF).
(4) Over Temp. (O.T.) = over specified operating junction temperature range.

Downloaded from Elcodis.com electronic components distributor

Pin Configuration

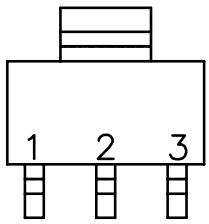

PIN	FUNCTION
1	ADJ/GND
2	OUT
3	IN
TAB IS OUTPUT	

Ordering Information

Device (1)(2)	V_{OUT} (V)	Package
SC1202CST-X.X.TR	1.3 to 5.7	SOT-223
SC1202ACST-X.X.TR	1.3 to 13.5	

Notes:
(1) Where X.X denotes voltage options. Available voltages are: 3.3V. Leave blank for adjustable version (see V_{OUT}). Contact factory for additional voltage options.
(2) Only available in tape and reel packaging. A reel contains 2500 devices.

Pin Descriptions

Pin Number	Pin Name	Pin Function
1	ADJ GND	This pin is the negative side of the reference voltage for the device. Transient response can be improved by adding a small bypass capacitor from the adjust pin to ground. This pin is the bottom end of the internal resistor feedback chain for fixed output voltage parts, and should be connected to ground.
2	OUT	This is the power output of the device, and is electrically connected to the TAB.
3	IN	This is the input supply pin for the device.

Block Diagram

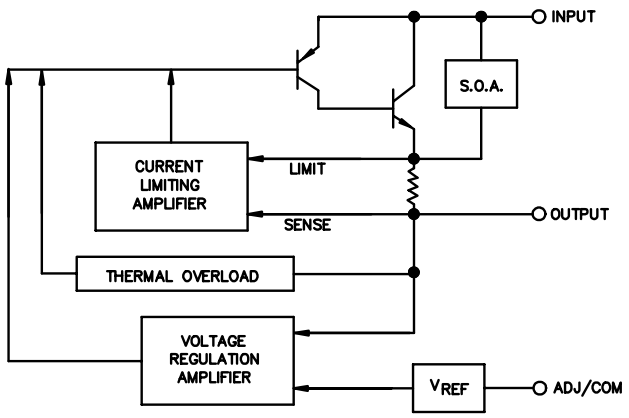

Marking Information

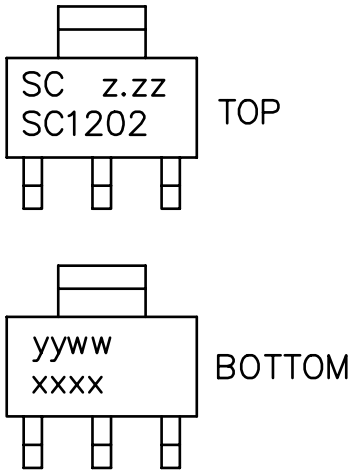

z.zz: Voltage option (example: 2.85). Left blank for adjustable parts
yyww: Datecode (example: 9812)
xxxx: Semtech Lot # (example: 80101)

Downloaded from Elcodis.com electronic components distributor

Outline Drawing - SOT-223

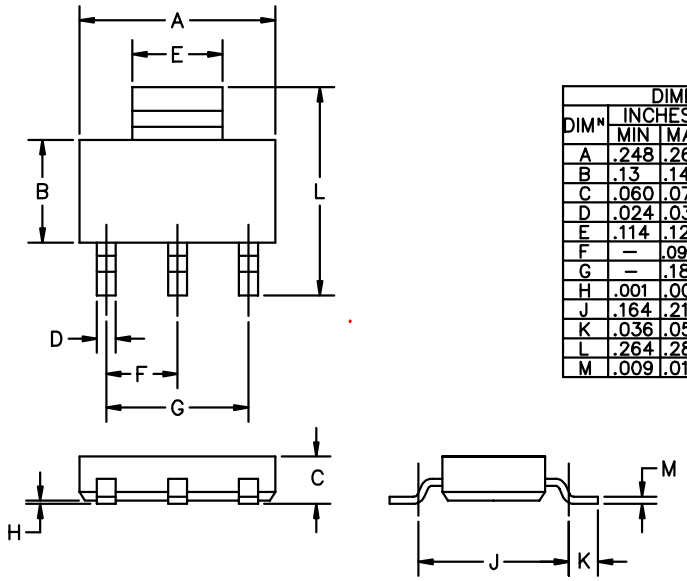

DIMENSIONS					
DIMN	INCHES		MM		NOTE
	MIN	MAX	MIN	MAX	
A	.248	.264	6.30	6.70	–
B	.13	.146	3.30	3.70	–
C	.060	.071	1.52	1.80	–
D	.024	.031	.60	.80	–
E	.114	.122	2.90	3.10	–
F	–	.090	–	2.30	BSC
G	–	.181	–	4.60	BSC
H	.001	.004	.020	.100	–
J	.164	.215	4.16	5.46	–
K	.036	.05	.91	1.27	–
L	.264	.287	6.70	7.30	–
M	.009	.013	.24	.32	–

CONTROLLING DIMENSIONS: MILLIMETERS.

Land Pattern - SOT-223

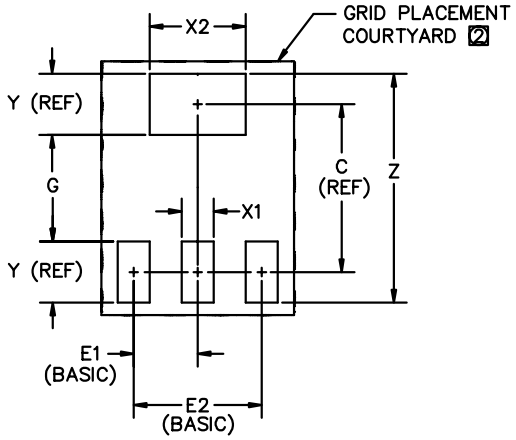

DIMENSIONS 1					
DIMN	INCHES		MM		NOTE
	MIN	MAX	MIN	MAX	
C	–	.24	–	6.20	–
E1	–	.09	–	2.30	–
E2	–	.18	–	4.60	–
G	.15	.16	4.00	4.20	–
X1	.03	.04	1.00	1.20	–
X2	.13	.14	3.40	3.60	–
Y	–	.09	–	2.20	–
Z	.32	.33	8.20	8.40	–

2 GRID PLACEMENT COURTYARD IS 18 x 14 ELEMENTS (9 mm X 7mm) IN ACCORDANCE WITH THE INTERNATIONAL GRID DETAILED IN IEC PUBLICATION 97.

1 CONTROLLING DIMENSION: MILLIMETERS

Contact Information

Semtech Corporation
Power Management Products Division
652 Mitchell Rd., Newbury Park, CA 91320
Phone: (805)498-2111 FAX (805)498-3804

Downloaded from Elcodis.com electronic components distributor