UTC TA7668BP LINEAR INTEGRATED CIRCUIT

DUAL PRE-AMPLIFIER FOR TAPE RECORDER

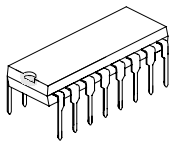

DIP-16

DESCRIPTION

The UTC TA7668BP is a dual pre-amplifier with ALC and muting designed for use recorder/playback amplifier of tape recorder. It is suitable for a stereo set and a radio cassette recorder.

FEATURES

*Build-in ALC detector circuit
*Build-in muting circuit
*Wide operating voltage range(6V to 15V)

BLOCK DIAGRAM

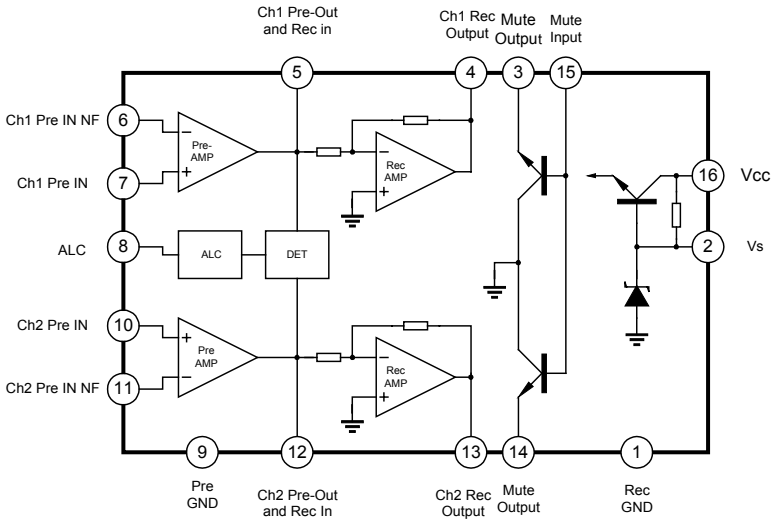

ABSOLUTE MAXIMUN RATING(Ta=25°C)

PARAMETER	SYMBOL	VALUE	UNIT
Supply Voltage	VCC	16	V
Power Dissipation	PD	750	mW
Operating Temperature	TOPR	-25~75	°C
Storage Temperature	TSTG	-55~150	°C

Note: De-rated above Ta=25°C in proportion of 6mW/°C.

Downloaded from Elcodis.com electronic components distributor

DC VOLTAGE(Vcc=9V,Ta=25°C, no input signal)

PIN NO.	SYMBOL	VALUE	UNIT
1	V1	0	V
2	V2	8.2	V
3	V3	0	V
4	V4	3.3	V
5	V5	1.3	V
6	V6	1.3	V
7	V7	0	V
8	V8	0.9	V
9	V9	0	V
10	V10	0	V
11	V11	1.3	V
12	V12	1.3	V
13	V13	3.3	V
14	V14	0	V
15	V15	2.4	V
16	V16	9	V

ELECTRICAL CHARACTERISTICS(Ta=25°C, Vcc=9V, f=1kHz, unless otherwise specified)

PARAMETER	SYMBOL	TEST CONDITIONS	MIN	TYP	MAX	UNIT
Quiescent Circuit Current	ICCQ	VIN=0		8.5	10.5	mA
PRE AMPLIFIER						
Open Loop Voltage Gain	GVO	VIN=-80dBm	65	78		dB
Maximum Output Voltage	VOM(1)	THD=1%	0.5	0.8		Vrms
Total Harmonic Distortion	THD(1)	VO=0.2Vrms		0.15	0.5	%
Output Noise Voltage	VNO	Rg=2.2KΩ, B.P.F., NAB, 30Hz~20kHz		0.26	0.6	mVrms
Cross Talk	C.T.	Rg=2.2KΩ	47	60		dB
REC AMPLIFIER						
Closed Loop Voltage Gain	GV	RL=10KΩ	12.7	14.7	16.7	dB
Maximum Output Voltage	VOM(2)	THD=1%	2	2.5		Vrms
Total Harmonic Distortion	THD(2)	VO=1.5Vrms		0.2		%
ALC Range	RALC	VIN=-60dBm,RIN=2.2KΩ		45		dB
Total Harmonic Distortion (ALC)	THD(ALC)	VIN=-20dBm, RIN=2.2KΩ,RL=10KΩ		0.3	1	%
ALC Voltage	VO(ALC)	VIN=-20dBm, RIN=2.2KΩ,RL=10KΩ	0.9	1.1	1.42	Vrms
Muting Attenuation	ATT		45	55		dB
ALC Balance	BALC	VIN=-20dBm		0	2	dB

Downloaded from Elcodis.com electronic components distributor

TEST METHOD

SYMBOL	S1	S2	S3	S4	S5	S6	S7	S8	S9	S10	Measure Terminal
ICCQ	*	*	*	*	*	*	*	*	OFF	*	Vcc
GVO	OFF	CH1	GVO	FLAT	CH1	*	*	*	OFF	OFF	Pre-Out
VOM(1)	OFF	CH1	GV	NAB	CH1	*	*	*	OFF	OFF	Pre-Out
THD(1)	OFF	CH1	GV	NAB	CH1	*	*	*	OFF	OFF	Pre-Out
VNO	OFF	OFF	GV	NAB	CH2		*	*	OFF	OFF	Pre-Out
CT	OFF	CH1	GV	FLAT	CH1→CH2	*	*	*	OFF	OFF	Pre-Out
GV	OFF	CH1	GV	FLAT	CH1	*	CH1	CH2	OFF	OFF	Pre-Out→ Rec-Out
VOM(2)	OFF	CH1	GV	FLAT	CH2	*	CH1	CH2	OFF	OFF	Rec-Out
THD(2)	OFF	CH1	GV	FLAT	CH2	*	CH1	CH2	OFF	OFF	Rec-Out
RALC	OFF	CH1	GV	FLAT	CH2	*	CH1	CH2	OFF	ON	Rec-Out
THD(ALC)	OFF	CH1	GV	FLAT	CH2	*	CH1	CH2	OFF	ON	Rec-Out
VO(ALC)	OFF	CH1	GV	FLAT	CH2	*	CH1	CH2	OFF	ON	Rec-Out
ATT	OFF	CH1	GV	FLAT	CH1	*	*	CH1	OFF→ ON	OFF	Mute-Out
BALC	CH2	CH1→CH2	GV	FLAT	*	*	CH1→CH2	*	OFF	ON	Rec-Out

Downloaded from Elcodis.com electronic components distributor

TEST CIRCUIT

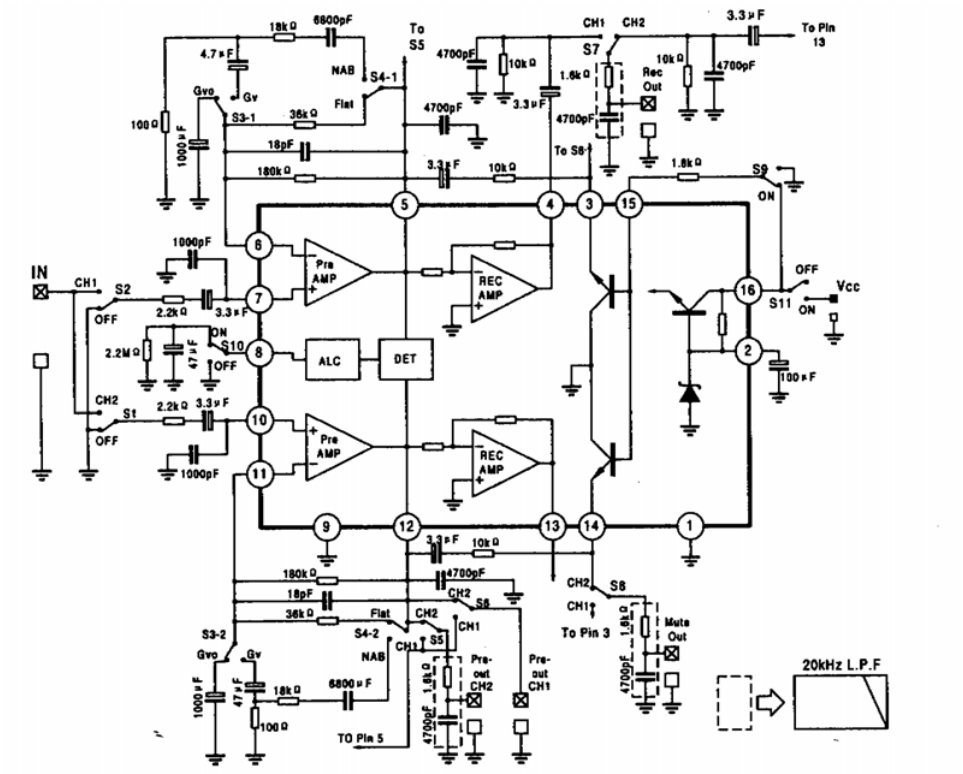

UTC assumes no responsibility for equipment failures that result from using products at values that exceed, even momentarily, rated values (such as maximum ratings, operating condition ranges, or other parameters) listed in products specifications of any and all UTC products described or contained herein. UTC products are not designed for use in life support appliances, devices or systems where malfunction of these products can be reasonably expected to result in personal injury. Reproduction in whole or in part is prohibited without the prior written consent of the copyright owner. The information presented in this document does not form part of any quotation or contract, is believed to be accurate and reliable and may be changed without notice.

Downloaded from Elcodis.com electronic components distributor