ZTLV431
1.24V Cost effective shunt regulator

Description

The ZTLV431 is a three terminal adjustable shunt regulator offering excellent temperature stability and output current handling capability up to 20mA. The output voltage may be set to any chosen voltage between 1.24 volts and 10 volts by selection of two external divider resistors.

The ZTLV431 can be used as a replacement for zener diodes in many applications requiring an improvement in zener performance.

The ZTLV431 is available as standard as an A grade which has an initial tolerance of 1% and covers the -40°C to 125°C temperature range as standard.

Features

- Low voltage operation V_{REF} = 1.24V
- Temperature range -40 to 125°C
- Reference voltage tolerance at 25°C
  - 1% ZTLV431A
- Typical temperature drift
  - 4 mV (0°C to 70°C)
  - 6 mV (-40°C to 85°C)
  - 11mV (-40°C to 125°C
- 100µA minimum cathode current
- 0.25Ω typical output impedance
- Adjustable output voltage 1.24V to 10V

Applications

- Opto-coupler linearization
- Linear regulators
- Improved Zener
- Variable reference

Pin connections

ZTLV431_F (SOT23)
(top view)

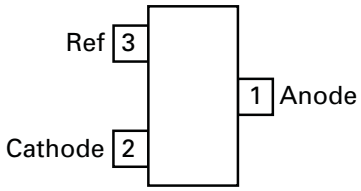

Ordering information

Tol.	Order code	Package	Part mark	Status	Reel size (inches)	Tape width (mm)	Quantity per reel
1%	ZTLV431AFTA	SOT23	S1A	Active	7" (180mm)	8	3,000

© Zetex Semiconductors plc 2008

Downloaded from Elcodis.com electronic components distributor

Absolute maximum ratings

Cathode voltage (V_{KA})	10V
Continuous cathode current (I_{KA})	-20 to 20mA
Reference input current range (I_{REF})	-0.05 to 3mA
Operating junction temperature	-40 to 150°C
Storage temperature	-55 to 150°C

Operation above the absolute maximum rating may cause device failure. Operation at the absolute maximum ratings, for extended periods, may reduce device reliability.

Unless otherwise stated voltages specified are relative to the ANODE pin.

Package thermal data

Package	Θ_{JA}	P_{DIS} T_A =25°C
SOT23	380°C/W	330 mW
SOT23F	160°C/W	780 mW

Recommended operating conditions

	Min.	**Max.**	**Units**
V_{KA} cathode voltage	V_{REF}	10	V
I_{KA} cathode current	0.1	15	mA
T_A operating ambient temperature range	-40	125	°C

© Zetex Semiconductors plc 2008

Downloaded from Elcodis.com electronic components distributor

Electrical characteristics (electrical characteristics over recommended operating conditions, T_A = 25°C, K_{KA} = V_{REF}, I_{KA} = 10mA unless otherwise stated)

Symbol	Parameter	Conditions		Min.	Typ.	Max.	Units
V_{REF}	Reference voltage		ZTLV431A	1.228	1.24	1.252	V
		T_A = -40 to 85°C	ZTLV431A	1.215		1.265	
		T_A = -40 to 125°C	ZTLV431A	1.209		1.271	
$V_{REF(dev)}$	Deviation of reference voltage over full temperature range	T_A = 0 to 70°C			4	12	mV
		T_A = -40 to 85°C			6	20	
		T_A = -40 to 125°C			11	31	
$\frac{\Delta V_{REF}}{\Delta V_{KA}}$	Ratio of change in reference voltage to the change in cathode voltage	V_{KA} from V_{REF} to I_{KA} = 10mA	6V		-1.5	-2.7	mV/V
			10V		-1.5	-2.7	
I_{REF}	Reference input current	I_{KA} = 10mA, R_1 = 10kΩ., R_2 = OC			0.1	0.5	µA
$I_{REF(dev)}$	I_{REF} deviation over full temperature range	I_{KA} = 10mA, R_1 = 10kΩ, R_2 = OC	T_A = 0 to 70°C		0.05	0.3	µA
			T_A = -40 to 85°C		0.1	0.4	
			T_A = -40 to 125°C		0.15	0.5	
I_{KMIN}	Minimum cathode current for regulation	V_{KA} = V_{REF}	T_A = -40 to 125°C		55	100	µA
$I_{K(OFF)}$	Off-state current	V_{KA} = 10V, V_{REF} =0V			10	30	µA
z_{KA}	Dynamic output impedance	V_{KA} = V_{REF}, f = <1kHz, I_K = 0.1 to 15mA			0.25	0.4	Ω

Deviation of reference input voltage, V_{DEV}, is defined as the maximum variation of the reference input voltage over the full temperature range.

The average temperature coefficient of the reference input voltage, V_{REF} is defined as:

$$V_{REF}\left(\frac{ppm}{°C}\right) = \frac{V_{DEV} x 1000000}{V_{REF}(T_1 - T_2)}$$

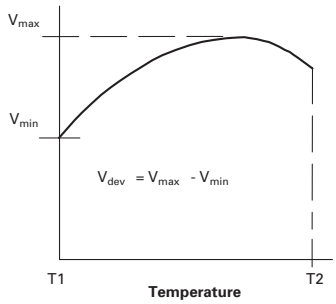

The dynamic output impedance, Z_KA, is defined as:

$$Z_{KA} = \frac{\Delta V_K}{\Delta I_K}$$

When the device is programmed with two externalresistors, R1 and R2, (fig 2) , the dynamic output impedance of the overall circuit, Z′, is defined as:

$$Z' = Z_{KA} x(\quad + \frac{R}{R} \quad)$$

© Zetex Semiconductors plc 2008

Downloaded from Elcodis.com electronic components distributor

Typical characteristics

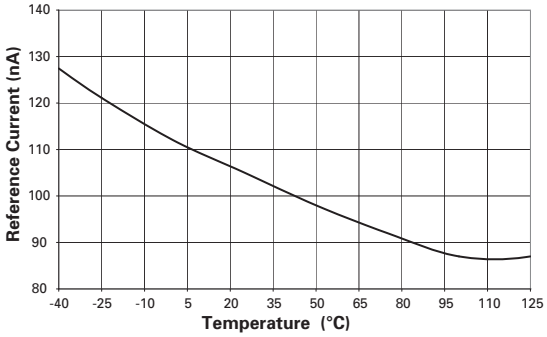

Reference Current v Temperature

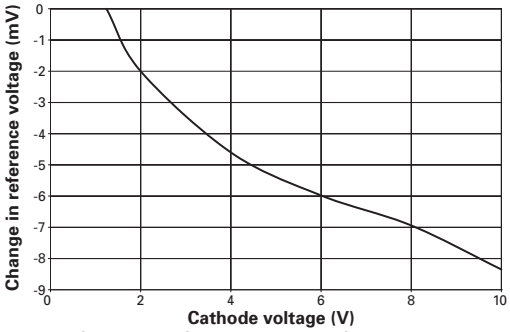

Change in reference voltage vs Cathode voltage

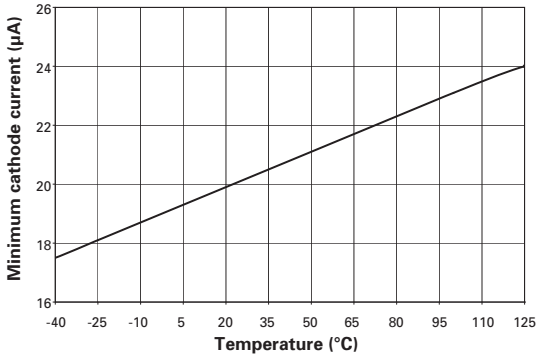

Minimum cathode current vs temperature

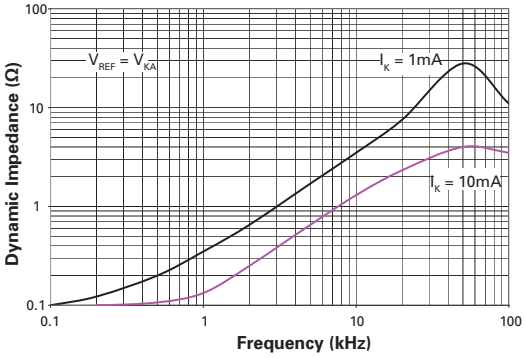

Dynamic impedance vs frequency

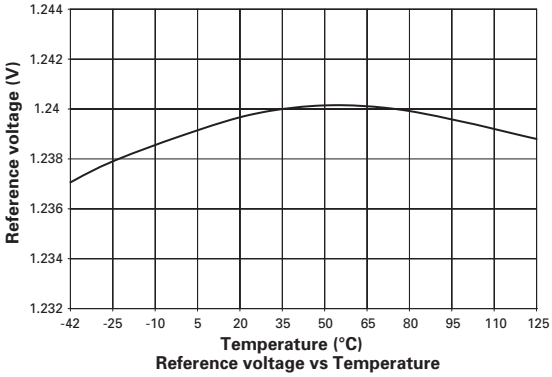

Reference voltage vs Temperature

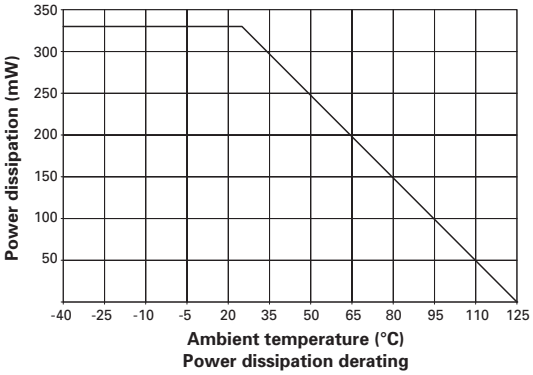

Power dissipation derating

© Zetex Semiconductors plc 2008

Downloaded from Elcodis.com electronic components distributor

Typical characteristics

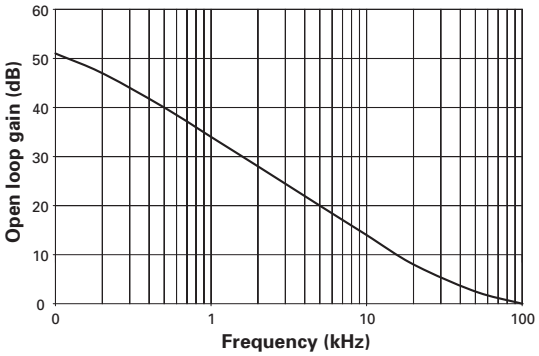

Open loop gain vs frequency

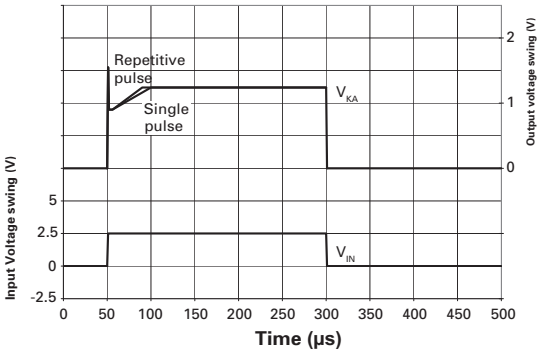

Pulse response

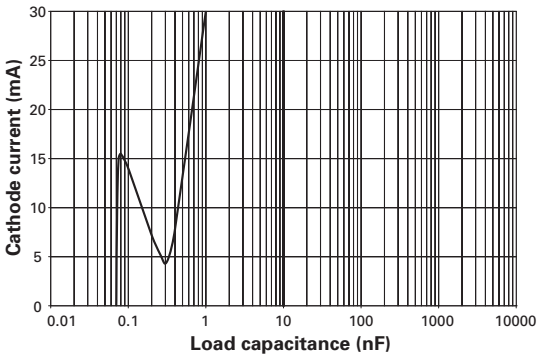

Stability boundary conditions

© Zetex Semiconductors plc 2008

Downloaded from Elcodis.com electronic components distributor

Typical characteristics

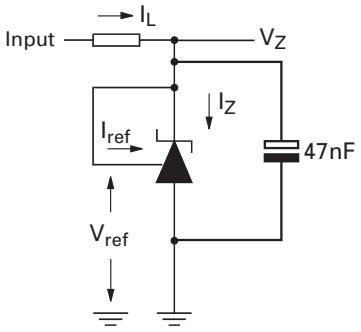

Fig 1 - Test circuit for $V_Z = V_{ref}$

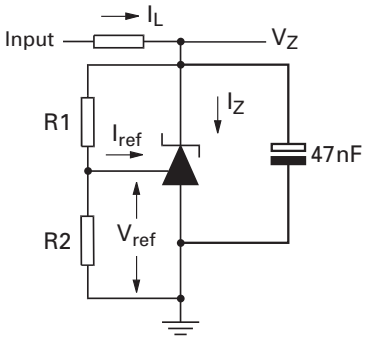

Fig 2 - Test circuit for $V_Z > V_{ref}$

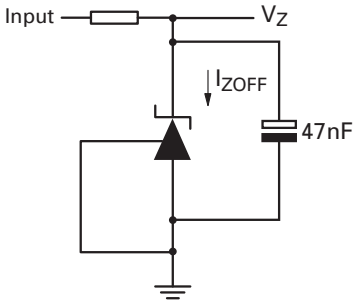

Fig 3 - Test circuit for for Off state current†

Pin connections - preview status devices

ZTLV431_FF (SOT23F)
(top view)

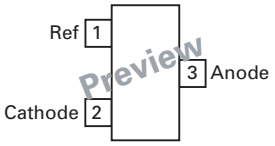

© Zetex Semiconductors plc 2008

Downloaded from Elcodis.com electronic components distributor

Package outline - SOT23

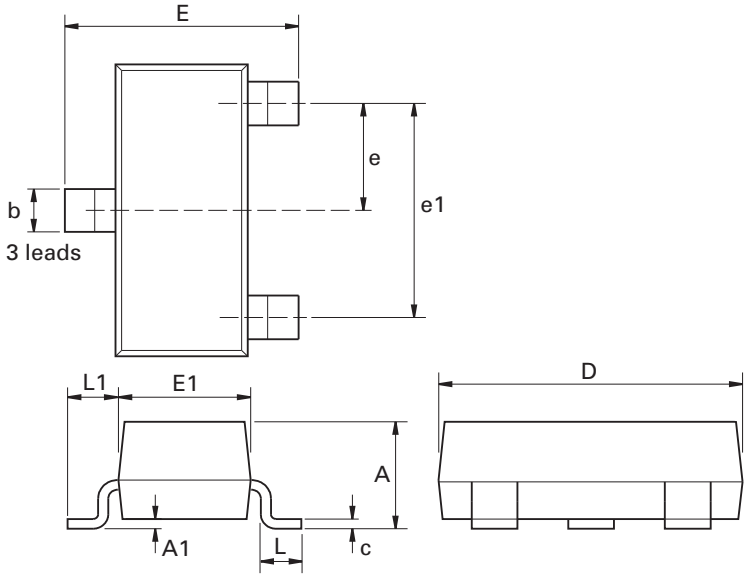

Dim.	Millimeters		Inches		Dim.	Millimeters		Inches	
	Min.	Max.	Min.	Max.		Min.	Max.	Min.	Max.
A	-	1.12	-	0.044	e1	1.90 NOM		0.075 NOM	
A1	0.01	0.10	0.0004	0.004	E	2.10	2.64	0.083	0.104
b	0.30	0.50	0.012	0.020	E1	1.20	1.40	0.047	0.055
c	0.085	0.20	0.003	0.008	L	0.25	0.60	0.0098	0.0236
D	2.80	3.04	0.110	0.120	L1	0.45	0.62	0.018	0.024
e	0.95 NOM		0.037 NOM		-	-	-	-	-

Note: Controlling dimensions are in millimeters. Approximate dimensions are provided in inches

© Zetex Semiconductors plc 2008

Downloaded from Elcodis.com electronic components distributor

Definitions

Product change

Zetex Semiconductors reserves the right to alter, without notice, specifications, design, price or conditions of supply of any product or service. Customers are solely responsible for obtaining the latest relevant information before placing orders.

Applications disclaimer

The circuits in this design/application note are offered as design ideas. It is the responsibility of the user to ensure that the circuit is fit for the user's application and meets with the user's requirements. No representation or warranty is given and no liability whatsoever is assumed by Zetex with respect to the accuracy or use of such information, or infringement of patents or other intellectual property rights arising from such use or otherwise. Zetex does not assume any legal responsibility or will not be held legally liable (whether in contract, tort (including negligence), breach of statutory duty, restriction or otherwise) for any damages, loss of profit, business, contract, opportunity or consequential loss in the use of these circuit applications, under any circumstances.

Life support

Zetex products are specifically not authorized for use as critical components in life support devices or systems without the express written approval of the Chief Executive Officer of Zetex Semiconductors plc. As used herein:

A. Life support devices or systems are devices or systems which:
   1. are intended to implant into the body

or

   2. support or sustain life and whose failure to perform when properly used in accordance with instructions for use provided in the labeling can be reasonably expected to result in significant injury to the user.

B. A critical component is any component in a life support device or system whose failure to perform can be reasonably expected to cause the failure of the life support device or to affect its safety or effectiveness.

Reproduction

The product specifications contained in this publication are issued to provide outline information only which (unless agreed by the company in writing) may not be used, applied or reproduced for any purpose or form part of any order or contract or be regarded as a representation relating to the products or services concerned.

Terms and Conditions

All products are sold subjects to Zetex' terms and conditions of sale, and this disclaimer (save in the event of a conflict between the two when the terms of the contract shall prevail) according to region, supplied at the time of order acknowledgement.

For the latest information on technology, delivery terms and conditions and prices, please contact your nearest Zetex sales office.

Quality of product

Zetex is an ISO 9001 and TS16949 certified semiconductor manufacturer.

To ensure quality of service and products we strongly advise the purchase of parts directly from Zetex Semiconductors or one of our regionally authorized distributors. For a complete listing of authorized distributors please visit: **www.zetex.com/salesnetwork**

Zetex Semiconductors does not warrant or accept any liability whatsoever in respect of any parts purchased through unauthorized sales channels.

ESD (Electrostatic discharge)

Semiconductor devices are susceptible to damage by ESD. Suitable precautions should be taken when handling and transporting devices. The possible damage to devices depends on the circumstances of the handling and transporting, and the nature of the device. The extent of damage can vary from immediate functional or parametric malfunction to degradation of function or performance in use over time. Devices suspected of being affected should be replaced.

Green compliance

Zetex Semiconductors is committed to environmental excellence in all aspects of its operations which includes meeting or exceeding regulatory requirements with respect to the use of hazardous substances. Numerous successful programs have been implemented to reduce the use of hazardous substances and/or emissions.

All Zetex components are compliant with the RoHS directive, and through this it is supporting its customers in their compliance with WEEE and ELV directives.

Product status key:

"Preview"	Future device intended for production at some point. Samples may be available
"Active"	Product status recommended for new designs
"Last time buy (LTB)"	Device will be discontinued and last time buy period and delivery is in effect
"Not recommended for new designs"	Device is still in production to support existing designs and production
"Obsolete"	Production has been discontinued

Datasheet status key:

"Draft version"	This term denotes a very early datasheet version and contains highly provisional information, which may change in any manner without notice.
"Provisional version"	This term denotes a pre-release datasheet. It provides a clear indication of anticipated performance. However, changes to the test conditions and specifications may occur, at any time and without notice.
"Issue"	This term denotes an issued datasheet containing finalized specifications. However, changes to specifications may occur, at any time and without notice.

Zetex sales offices

Europe	Americas	Asia Pacific	Corporate Headquarters
Zetex GmbH Kustermann-park Balanstraße 59 D-81541 München Germany	Zetex Inc 700 Veterans Memorial Highway Hauppauge, NY 11788 USA	Zetex (Asia Ltd) 3701-04 Metroplaza Tower 1 Hing Fong Road, Kwai Fong Hong Kong	Zetex Semiconductors plc Zetex Technology Park, Chadderton Oldham, OL9 9LL United Kingdom
Telefon: (49) 89 45 49 49 0 Fax: (49) 89 45 49 49 49 europe.sales@zetex.com	Telephone: (1) 631 360 2222 Fax: (1) 631 360 8222 usa.sales@zetex.com	Telephone: (852) 26100 611 Fax: (852) 24250 494 asia.sales@zetex.com	Telephone: (44) 161 622 4444 Fax: (44) 161 622 4446 hq@zetex.com

© 2007 Published by Zetex Semiconductors plc

© Zetex Semiconductors plc 2008

Downloaded from Elcodis.com electronic components distributor