STRUCTURE : Silicon Monolithic Integrated Circuit

PRODUCT NAME : DC/DC converter IC for camera module for car navigation system

MODEL NAME : B D 8 6 7 6 K N

BLOCK DIAGRAM : Fig. - 2

◎FEATURES :

- +3.3V output synchronous step down DC/DC converter
- +1.2V output synchronous step down DC/DC converter
- +15V output boost DC/DC converter and LDO regulator
- -5.5V output Voltage control charge pump (negative voltage)
- Soft start function
- Reset function
- Building in low voltage and over voltage protection function
- Building in terminal RT OPEN/SHORT protection
- The frequency can be set by external resistance
- Protection control with built-in sequencer
- VQFN-36 package (6.2mm□ Package)

◎ABSOLUTE MAXIMUM RATING: (Ta=25℃)

Parameter	Symbol	Limits			Unit
VIN supply voltage	VIN	-0.3	～	+18.0	V
PVIN supply voltage	PVIN	-0.3	～	VIN+0.3	V
V33IN Input terminal voltage	V33IN	-0.3	～	5.0	V
V16 terminal voltage	V16	-0.3	～	+20.0	V
CP terminal voltage	CP	V33IN-0.3	～	+10.0	V
MV66 terminal voltage	MV66	-10.0	～	+0.3	V
Terminal voltage 1*2*3	VINOUT1	-0.3	～	VIN+0.3	V
Terminal voltage 2*4	VINOUT2	-0.3	～	V33IN+0.3	V
Terminal voltage 3*5	VOUT3	-0.3	～	V16+0.3	V
Terminal voltage 4*6	VOUT4	-0.3	～	CP	V
Terminal voltage 5*7	VOUT5	MV66-0.3	～	+0.3	V
Power dissipation	Pd	0.875*1			W
Operating temperature	Topr	-40	～	+85	℃
Storage temperature	Tstg	-55	～	+150	℃

*1 70mm×70mm, thickness1.6mm, less than 3% share of copper foil when implementing glass epoxy board.
Operating at higher than Ta=25℃, 7.0mW shall be reduced per 1

*2 Input terminal voltage:CTL1(32pin), CTL2(33pin), CTL3(34pin), CTL4(35pin), TEST1(9pin), TEST2(10pin), V33(6pin),V12(14pin)

*3 Output terminal voltage: RT(1pin),RSTO(3pin),RSTDLY(4pin),SS33(5pin),SS12(13pin),SS16(25pin),FC33(7pin), FC12(15pin),FC16(28pin),TEST3(31pin),SW33(11pin),V33(6pin)

*4 SW12(17pin) terminal voltage *5 SW16(30pin), V15(26pin) terminal voltage *6 CM(20pin) terminal voltage *7 CR(22pin), MV5(24pin) terminal voltage

◎OPERATION CONDITION (Please set the power-supply voltage in consideration of a power dissipation.)

Parameter	Symbol	MIN	TYP	MAX	Unit
VIN supply voltage	VIN	4.5	6.0	9.0	V
PVIN supply voltage	PVIN	4.5	6.0	9.0	V
V33IN terminal voltage	V33IN	2.7	3.3	3.6	V

This product is not designed for protection against radioactive rays.

◎ELECTRICAL CHARACTERISTICS

(Unless otherwise noted Ta=25℃, VIN=6.0V,PVIN=6.0V,CTL1,2,3,4=6.0V,GND=0V)

Parameter	Symbol	specification value			UNIT	Condition
		MIN	TYP	MAX		
VIN,PVIN Circuit current 1	I_{Q1}	-	0	50	μA	CTL1,2,3,4=0V
VIN,PVIN Circuit current 2	I_{Q2}	-	-	20	mA	CTL1,2,3,4=VIN、 V33=3.5V V16=17.0V 、V12=1.4V
Range of DC/DC converter oscillation frequency setting	F_{OSC}	500	1000	1200	kHz	possible to setup at RT terminal.
< 3.3V output Step-down DC/DC converter >						
3.3V output voltage	V_{033}	3.234	3.300	3.366	V	CTL1=VIN
V33 Terminal Discharge resistance	R_{V33DIS}	270	390	500	Ω	
SS33 Terminal Charging current	I_{SS33}	-4.0	-2.5	-1.0	μA	V_{SS33}=1.0V
SS33 Terminal Threshold voltage	V_{SS33TH}	1.0	1.1	1.2	V	V_{SS33}voltage、V_{V33}=3.3V
SS33 Terminal Standby voltage	$V_{SS33STB}$	0.11	0.15	0.19	V	V_{SS33} voltage (L→H)
SS33 Terminal Protection circuit start voltage	$V_{SS33PON}$	1.0	1.1	1.2	V	V_{SS33} voltage (L→H)
V33 Terminal Low voltage detection voltage	V_{V33LVP}	1.11	1.32	1.53	V	V_{V33} voltage (H→L)
V33 Terminal Over voltage detection voltage	V_{V33OVP}	4.45	4.95	5.45	V	V_{V33} voltage
< 1.2V output Step-down DC/DC converter >						
1.2V output voltage	V_{012}	1.176	1.200	1.224	V	CTL1,2=VIN
V12 Terminal Discharge resistance	R_{V12DIS}	270	390	500	Ω	
SS12 Terminal Charging current	I_{SS12}	-4.0	-2.5	-0.1	μA	V_{SS12}=1.0V
SS12 Terminal Threshold voltage	V_{SS12TH}	1.0	1.1	1.2	V	V_{SS12}voltage、V_{V12}=1.2V
SS12 Terminal Standby voltage	$V_{SS12STB}$	0.11	0.15	0.19	V	V_{SS12} voltage (L→H)
SS12 Terminal Protection circuit start voltage	$V_{SS12PON}$	1.0	1.1	1.2	V	V_{SS12} voltage (L→H)
V12 Terminal Low voltage detection voltage	V_{V12LVP}	0.40	0.48	0.56	V	V_{V12} voltage (H→L)
V12 Terminal Overvoltage detection voltage	V_{V12OVP}	1.62	1.8	0.98	V	V_{V12} voltage
< 16.5V output Boost DC/DC converter >						
V16 output voltage	V_{016}	15.65	16.50	17.35	V	CTL1,2,3=VIN
SS16 Terminal Charging current	I_{SS16}	-4.0	-2.5	-1.0	μA	V_{SS16}=1.0V
SS16 Terminal Threshold voltage	V_{SS16TH}	1.0	1.1	1.2	V	V_{SS16}voltage、V_{V15}=15.0V
SS16 Terminal Standby voltage	$V_{SS16STB}$	0.11	0.15	0.19	V	V_{SS33} voltage (L→H)
SS16 Terminal Protection circuit start voltage	$V_{SS16PON}$	1.0	1.1	1.2	V	V_{SS16} voltage (L→H)
< 15V output LDO >						
V15 output voltage	V_{015}	14.70	15.00	15.30	V	CTL1,3=VIN
V15 Terminal Discharge resistance	R_{V15DIS}	270	390	500	Ω	
V15 Terminal Overvoltage detection voltage	V_{V15OVP}	16.20	18.00	19.80	V	
V15 Terminal Low voltage detection voltage	V_{V15LVP}	5.4	6.0	6.6	V	
< -5.5V output reversing charge pump >						
MV5 output voltage	V_{MV5}	-5.61	-5.50	-5.39	V	CTL1,2,4=VIN
MV5 Terminal Discharge resistance	R_{MV5DIS}	330	470	610	Ω	CTL4=0V
MV5 Terminal Overvoltage detection voltage	V_{MV5OVP}	-8.25	-7.50	-6.75	V	V_{MV5} voltage、V_{V33}=3.3V
MV5 Terminal Protection circuit start voltage	V_{MV5PON}	-4.5	-3.5	-2.5	V	V_{MV5} voltage (H→L)、V_{V33}=3.3V
MV5 Terminal Low voltage detection voltage	V_{MV5LVP}	-2.5	-2.0	-1.5	V	V_{MV5} voltage (L→H)、V_{V33}=3.3V
< Reset >						
Reset voltage	V_{RST1}	2.673	2.700	2.727	V	V_{V33} (H→L)
Reset release voltage	V_{RST2}	2.850	3.000	3.150	V	V_{V33} (L→H)
RSTDLY Terminal detection voltage	V_{RSTDLY}	0.800	0.900	1.000	V	V_{RSTDLY} (L→H)、V_{V33}=3.3V
RSTO Terminal Low output voltage	V_{RSTOL}	-	-	0.5	V	I_{RSTO} =4mA
< Other >						
CTL Terminal input voltage H level voltage	V_{IHCTL}	2.5	-	VIN	V	CTL1,2,3,4
CTL Terminal input voltage L level voltage	V_{ILCTL}	-	-	0.5	V	CTL1,2,3,4
CTL Terminal input current	V_{IFNL}	-	20	35	μA	CTL1,2,3,4=VIN

●V_{V33} : V33 voltage、V_{VSS33} : SS33 voltage、V_{V12} : V12 voltage、V_{SS12} : SS12 voltage、V_{SS16} : SS16 voltage、
V_{V15IN} : V15 voltage、V_{MV5} : MV5 voltage、V_{RSTDLY} : RSTDLY voltage、I_{RSTO} : RSTO input current

●This product is not designed for protection against radioactive rays.

●The current ability must not exceed Pd.

◎PIN ASSIGNMENT

No.	Symbol	Description	No.	Symbol	Description
1	RT	Frequency adjustment resistance connection terminal	19	CP	3.3V and 6.6V switch
2	GND	GND(0V connection)	20	CM	0V and 6.6V switch
3	RSTO	Reset output	21	PGNDCP	Power GND for Charge pump (0V connection)
4	RSTDLY	Reset release delay element connection terminal	22	CR	0V and -6.6V switch
5	SS33	Soft start adjustment capacity connection terminal for 3.3VDC/DC	23	MV66	-6.6V charge pump output
6	V33	Feedback terminal for 3.3VDC/DC	24	MV5	-5.5V LDO output capacity connection terminal
7	FC33	Error amplifier output terminal for 3.3VDC/DC	25	SS16	Soft start adjustment capacity connection terminal for 16VDC/DC
8	PVIN	Power supply input terminal for 3.3VDC/DC	26	V15	15.0V LDO output
9	TEST1	Test terminal 1(0V connection).	27	V16	Feedback terminal for 16VDC/DC
10	TEST2	Test terminal 2(0V connection).	28	FC16	Error amplifier output terminal for 16VDC/DC
11	SW33	Coil connection terminal for 3.3VDC/DC	29	PGND16	Power GND for 16VDC/DC (0V connection)
12	PGND33	Power GND for 3.3VDC/DC (0V connection)	30	SW16	Coil connection terminal for 16VDC/DC
13	SS12	Soft start adjustment capacity connection terminal for 1.2VDC/DC	31	TEST3	Test terminal 3 (open)
14	V12	Feedback terminal for 1.2VDC/DC	32	CTL1	3.3VDC/DC control terminal
15	FC12	Error amplifier output terminal for 1.2VDC/DC	33	CTL2	1.2VDC/DC control terminal
16	PGND12	Power GND for 1.2VDC/DC (0V connection)	34	CTL3	15.0V LDO control terminal
17	SW12	Coil connection terminal for 1.2VDC/DC	35	CTL4	-5.5V LDO control terminal
18	V33IN	Power supply input terminal for 1.2VDC/DC	36	VIN	Power supply input terminal

◎PACKAGE OUTLINE

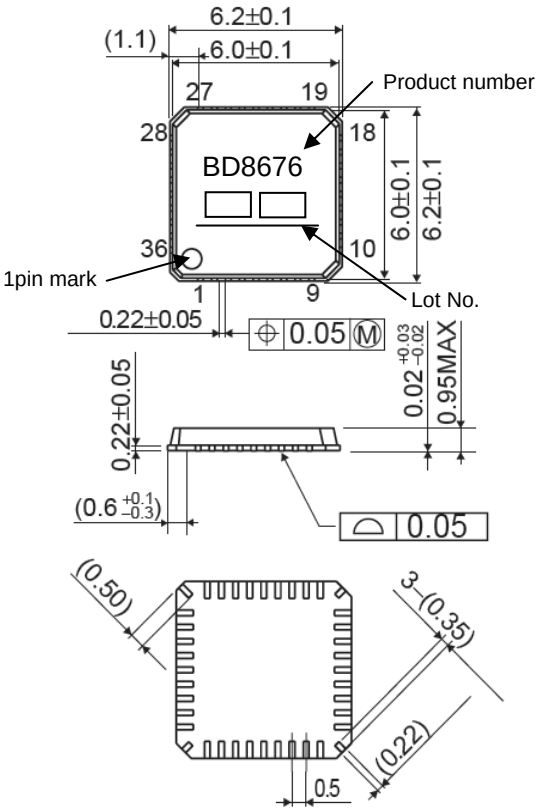

package: VQFN36(Unit:mm)

Fig.-1 PACKAGE OUTLINE

◎BLOCK DIAGRAM

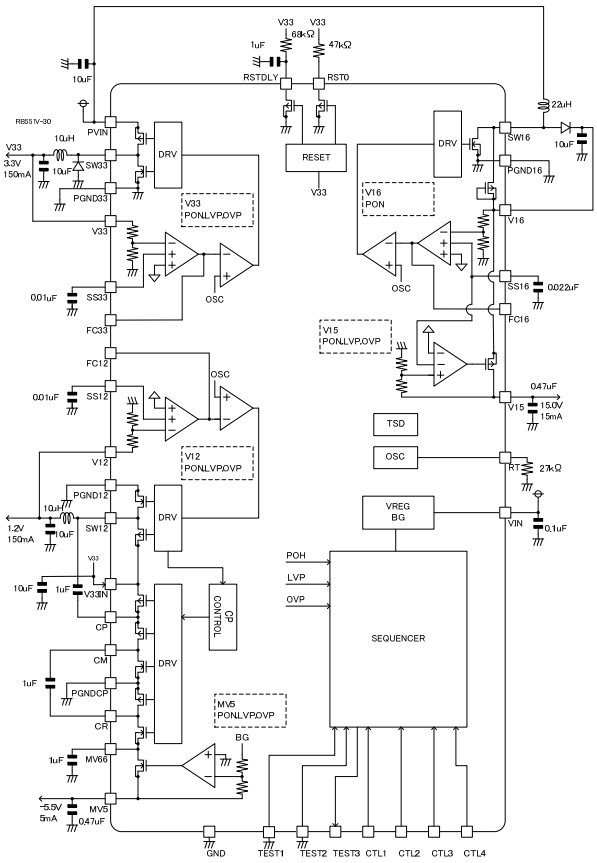

Fig.-2.BLOCK DIAGRAM

◎NOTE ON USE

1. About the absolute maximum rating

   Attention is brushed off enough to the quality control, it is likely to destroy when the absolute maximum rating such as impressed voltages (VCC_IN,DCIN) and ranges (Topr) of the operating temperature as it is exceeded, the mode of breakings of the short or the opening, etc. cannot be specified, and examine it in this IC to give physical measures for safety such as fuses when a special mode that exceeds the absolute maximum rating is assumed.
2. About the reverse-connection of the power supply connector

   IC might destroy it by reversely connecting the power supply connector. Give measures such as putting the diode between power supply terminals of power supply and IC outside for the reverse-touching destruction protection.
3. Power supply line

   Please do measures such as putting the bypass capacitor in power supply-GND nearest pin of this IC as the route of the resurrection current to cause the return of the current in which it resurrected it by the counter electromotive force of the coil.
   Please confirm the characteristic of the electrolytic capacitor enough as the capacity omission etc. at the low temperature never happen, and decide it.
4. About grand potential

   Any state of operation must become the lowest potential about the potential of the terminal GND. Moreover, confirm whether there is terminal that is actually the voltage of GND or less including transients. [Negative power supply terminal CR(22pin) MV66(23pin) MV5(24pin) is excluded.]
5. About the heat design

   Think about permissible loss (Pd) in an actual state of use, and do the heat design with the margin enough.
6. About the short and the miss-installation between terminals

   Note the direction and the miss-registration of IC enough when you install it in the set substrate. IC might destroy it as well as reversely connecting the power supply connector when installing it by mistake. Moreover, there is fear of destruction when the foreign body enters between terminals, the terminal, the power supply, and grandeur and it is short-circuited.
7. About operation in strong electromagnetic field

   In use in strong electromagnetic field, note that there is a possibility of malfunctioning.
8. About the capacitor during output-GND

   The current charged the capacitor with when VCC is 0V or is GND and is short-circuited when a big capacitor is connected between GND output by some factors flows into the output and it is likely to destroy it. Give the capacitor between GND output to 0.1μF or less.
9. About the inspection by the set substrate

   It is likely to suffer stress to IC and discharge electricity every one process when you connect the capacitor with the pin with low impedance when inspecting it in the set substrate. Moreover, detach it after connecting after the power supply is turned off without fail when detaching it to G in the inspection process, inspecting, and turning off the power supply. n addition, be give the earth to the assembly process as a static electricity measures, and careful enough when it transports and you preserve it.
10. About each input terminal

    This IC is a monolithic IC which has a P^+ isolations and P substrate to isolate elements each other.
    This P layer and an N layer in each element form a PN junction to construct various parasitic elements.
    For instance, the potential difference operates in resistance as shown in the figure below when resistance and the transistor connect it with the terminal and the playground (GND) >(terminal B) joint of PN operates as a parasitic diode in playground (GND) >(terminal A) transistor (NPN). In addition, the NPN transistor of parasitism works with N layer of the element of the above-mentioned parasitic diode and the neighborhood and others in transistor (NPN). A parasitic element in IC composition is inevitably formed because of the potential relation.
    A parasitic element can operate, the interference with the circuit operation be caused, it malfunction, and, consequently, it cause destruction. Therefore, do not do the usage that a parasitic element operates as a voltage that is lower than the playground (GND;P substrate) is impressed to the input terminal enough. Moreover, do not impress the voltage to the input terminal when you do not impress the power-supply voltage to IC. Give each input terminal to me the voltage below the power-supply voltage or in the guarantee value of an electric characteristic when you similarly impress the power-supply voltage.

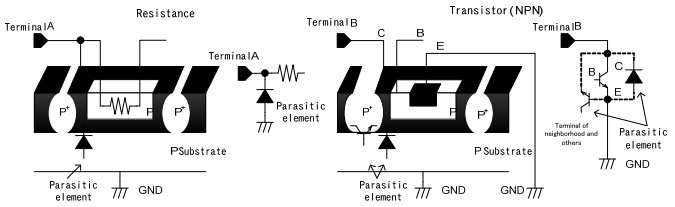

Example of IC of simple structure

11. Earth wiring pattern

    If small signal GND and large current GND exist, disperse their pattern. In addition, for voltage change by pattern wiring impedance and large current not to change voltage of small signal GND, each ground terminal of IC must be connected at the one point on the set circuit board. As for GND of external parts, it is similar to the above-mentioned.

12. Thermal Shut-Down

    When a thermal shutdown operates, the DC/DC converter controller of all Ch is turned off. When a thermal shutdown is released, the DC/DC converter controller of all Ch becomes an operation beginning from turning off.

Notes

No copying or reproduction of this document, in part or in whole, is permitted without the consent of ROHM Co.,Ltd.

The content specified herein is subject to change for improvement without notice.

The content specified herein is for the purpose of introducing ROHM's products (hereinafter "Products"). If you wish to use any such Product, please be sure to refer to the specifications, which can be obtained from ROHM upon request.

Examples of application circuits, circuit constants and any other information contained herein illustrate the standard usage and operations of the Products. The peripheral conditions must be taken into account when designing circuits for mass production.

Great care was taken in ensuring the accuracy of the information specified in this document. However, should you incur any damage arising from any inaccuracy or misprint of such information, ROHM shall bear no responsibility for such damage.

The technical information specified herein is intended only to show the typical functions of and examples of application circuits for the Products. ROHM does not grant you, explicitly or implicitly, any license to use or exercise intellectual property or other rights held by ROHM and other parties. ROHM shall bear no responsibility whatsoever for any dispute arising from the use of such technical information.

The Products specified in this document are intended to be used with general-use electronic equipment or devices (such as audio visual equipment, office-automation equipment, communication devices, electronic appliances and amusement devices).

The Products specified in this document are not designed to be radiation tolerant.

While ROHM always makes efforts to enhance the quality and reliability of its Products, a Product may fail or malfunction for a variety of reasons.

Please be sure to implement in your equipment using the Products safety measures to guard against the possibility of physical injury, fire or any other damage caused in the event of the failure of any Product, such as derating, redundancy, fire control and fail-safe designs. ROHM shall bear no responsibility whatsoever for your use of any Product outside of the prescribed scope or not in accordance with the instruction manual.

The Products are not designed or manufactured to be used with any equipment, device or system which requires an extremely high level of reliability the failure or malfunction of which may result in a direct threat to human life or create a risk of human injury (such as a medical instrument, transportation equipment, aerospace machinery, nuclear-reactor controller, fuel-controller or other safety device). ROHM shall bear no responsibility in any way for use of any of the Products for the above special purposes. If a Product is intended to be used for any such special purpose, please contact a ROHM sales representative before purchasing.

If you intend to export or ship overseas any Product or technology specified herein that may be controlled under the Foreign Exchange and the Foreign Trade Law, you will be required to obtain a license or permit under the Law.

ROHM SEMICONDUCTOR

Thank you for your accessing to ROHM product informations.
More detail product informations and catalogs are available, please contact us.

ROHM Customer Support System

http://www.rohm.com/contact/