PREMIER DEVICES, INC.
Engineering & Manufacturing

PA0943DG-41

DROP-IN ISO-ATTENUATOR

Features

- Low Cost
- Industry Standard 1 Inch Drop-in package
- Designed for Wireless Telecom Systems
- 50 Ohms Characteristic Impedance

Description

The PA0943DG-41 is a small low cost drop-in Iso-Attenuator designed for applications in high performance linear power amplifiers for wireless base stations. These Iso-Attenuators feature a robust construction for high reliability with excellent IMD performance. CCW rotation and special tab offsets available on request. S-Parameters are also available on request.

Specifications

Parameter	Minimum	Typical	Maximum
Frequency Range (MHz)	925		960
Insertion Loss (dB)		<. 15	.30
Isolation (dB)	20	>25	
Return Loss (dB)	20	>30	
Attenuation (dB)	29	30	31
IMD (dBc) 2T x 37.5 Watts	-70	-75	

Note: Typical values represent Mid-band performance @ 25°C.

Absolute Maximum Ratings

Parameter	Maximum
Forward Power	100 Watts
Reverse Power	60 Watts
Operating Temperature	-40 to +85 °C
Storage Temperature	-40 to +85 °C

Schematic

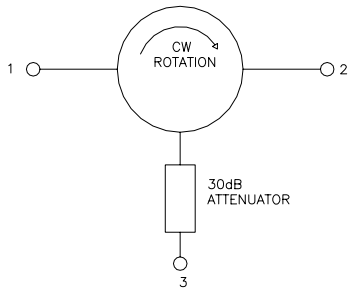

Package

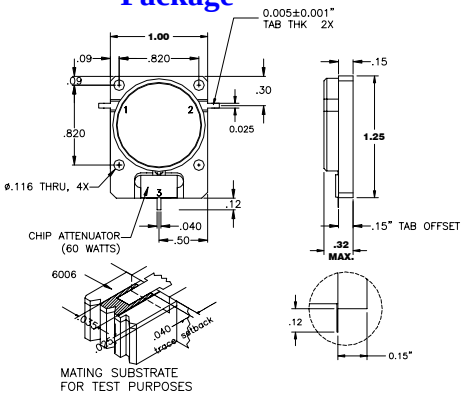

Pin Functions

Function	Pin
INPUT	1
OUTPUT	2
ATTENUATION	3

Typical Test Data – Insertion Loss

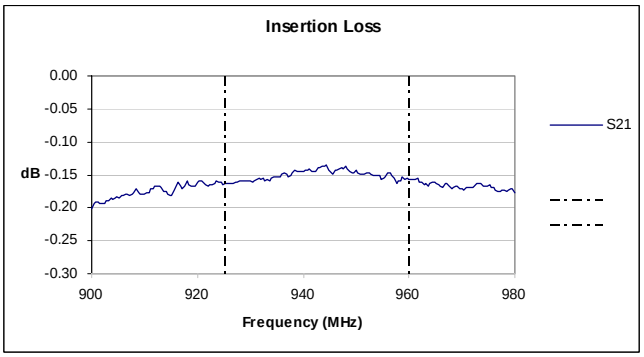

Typical Test Data – Return Loss and Isolation

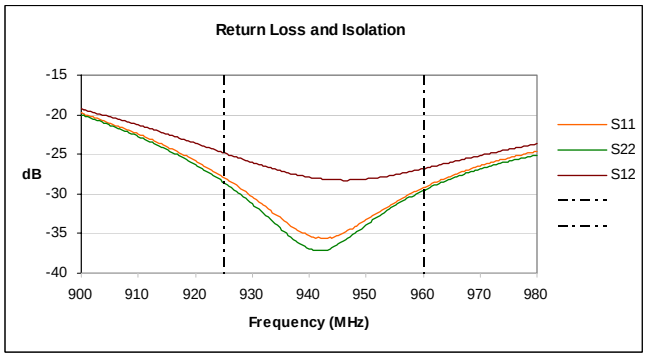

Specifications and information on this data sheet are subject to change without notice..

1860 Hartog Drive, San Jose, California 95131 USA Tel: 001-408-436-7720 Fax: 001-408-436-7689 Email: Sales@premierdevices.com
Leffelholzstr. 20, D-90441, Nurnberg, Germany Tel: +49(0)911/9411 233 Fax: +49(0)911/9411 198 Email: Sales.germany@premierdevices.com
2/1-2F, No.99 Lane 2535 Gudai Rd, Shanghai, China PC 201100 Tel: (86)21-5416-8648 Fax: (86)21-5416-8753 Email: Sales.china@premierdevices.com

Downloaded from Elcodis.com electronic components distributor